Riva

Owner's manual

RIVAMARE

This manual has been drafted in compliance with standard UNI EN ISO 10240.
Any reprinting, either in whole or in part, without prior written approval by **FERRETTI S.p.A.** is strictly prohibited.
This manual has been issued by **FERRETTI S.p.A.**

Riva

A FERRETTIGROUP BRAND

Registered offices:
Via Irma Bandiera, 62
47841 - Cattolica (RN) - Italy
Tel. +39 0541 839611
Fax +39 0541 839625

Administrative headquarters:
Via Ansaldo, 7
47122 - Forlì (FC) - Italy
Tel. +39 0543 787511
Fax +39 0543 473069
www.ferrettigroup.com

www.riva-yacht.com
customer.service@riva-yacht.com

1- FOREWORD

1.1 SAFETY NOTICES ... 2
1.1.1 Specific safety warnings ... 3
1.2 USE OF TECHNICAL DOCUMENTATION ... 4
1.3 MANUAL INTRODUCTION ... 5
1.4 LAYOUT OF THE MANUAL ... 6
1.5 SERVICE REQUIREMENT METHOD ... 7
1.6 CLASSIFICATION AND IDENTIFICATION CERTIFICATION ... 8
1.6.1 Yacht identification data ... 8
1.6.2 Load-carrying capacity ... 8

2- GENERAL SAFETY RULES

2.1 GENERAL SAFETY RULES ... 12
2.1.1 Use-related rules ... 14
2.1.2 Maintenance rules ... 16
2.2 FIRE PREVENTION RULES ... 21
2.2.1 General fire prevention rules ... 23
2.3 DANGEROUS AREAS ... 24
2.4 ENVIRONMENT REMARKS ... 26
2.5 REGULATIONS FOR WASTE DISPOSAL ... 27
2.6 ESCAPE ROUTE PLAN ... 28
2.7 SAFETY EQUIPMENT ... 30
2.7.1 Safety plates ... 32
2.7.2 Emergency boarding system ... 33
2.8 FIRE-FIGHTING SYSTEM ... 34
2.8.1 Automatic fire-fighting system ... 35
(engine room and technical room) ... 35
2.8.2 Manual fire-fighting system ... 39
2.8.3 Essential restoring for resuming navigation ... 41
2.8.4 High temperature sensors in the engine room ... 42
2.8.5 Maintenance of the fire-fighting system ... 43
2.9 MANDATORY SAFETY EQUIPMENT ... 44
2.9.1 Minimum rescue facilities and safety equipment to be kept on board of yachts and leisure crafts according to the distance from the coast or shore ... 45
2.9.2 First aid kit ... 46
2.10 USE OF THE SAFETY EQUIPMENT ... 47
2.10.1 Self-inflatable life raft ... 47
2.10.2 Vhf-radiotelephone ... 49
2.10.3 Portable fire-extinguishers ... 51
2.10.4 Portable fire-extinguishers maintenance ... 53
2.10.5 Life buoy ... 54
2.10.6 Individual life jacket ... 54
2.10.7 Signalling rockets ... 56
2.11 USEFUL ITEMS TO HAVE ON BOARD ... 57

3- DESCRIPTION OF THE YACHT

3.1 MAIN DIMENSIONS AND CHARACTERISTIC DATA OF THE YACHT ... 60
3.1.1 Main dimensions ... 60
3.1.2 Data and features ... 61
3.2 GENERAL DESCRIPTION ... 62
3.3 MAIN DECK ... 63
3.3.1 Navigation lights ... 70
3.3.2 Mast daylight signals ... 73
3.3.3 Anchor light positioning ... 74
3.4 LOWER DECK ... 75
3.4.1 Procedure for using the instant bottle refrigerator ... 81
3.5 ENGINE ROOM AND TECHNICAL ROOM ... 82

4- HELM STATION

4.1 HELM STATION ... 88
4.1.1 Front section ... 90
4.1.2 Port dashboard section ... 91
4.1.3 Starboard dashboard section ... 92
4.1.4 Battery switches panel ... 92
4.2 NAVIGATION INSTRUMENTS ... 93
4.2.1 Radar / chartplotter / echosounder ... 93
4.2.2 Magnetic compass ... 94
4.3 DEVICES FOR MOORING AND MANOEUVRING ... 95
4.3.1 Bow thruster control panel ... 95

4.3.2 Windlass buttons ... 96
4.4 ENGINE CONTROL PANELS ... 97
4.4.1 Engines analog gauges ... 97
4.4.2 Throttle ... 97
4.4.3 Engine ignition keys ... 97
4.4.4 Engine starting push-buttons ... 98
4.5 OTHER INSTRUMENTS ... 98
4.5.1 Bimini control buttons ... 98
4.5.2 Bilge pump operation lights ... 99
4.5.3 Engine room door opening buttons ... 99
4.5.4 VHF-DSC radio telephone ... 99
4.5.5 Alarm warning lights ... 102

5- ON-BOARD SYSTEMS
5.1 ELECTRIC SYSTEM ... 106
5.1.1 Fuse ... 112
5.1.2 Maintenance of the electric system ... 113
5.1.3 Battery set ... 114
5.1.4 Battery breaker panel ... 116
5.1.5 Maintenance of the batteries ... 118
5.1.6 Charge of the batteries ... 119
5.1.7 Battery check (accumulators) ... 120
5.1.8 Battery charger ... 121
5.1.9 Battery charger maintenance ... 123
5.1.10 Shore electric supply ... 124
5.1.11 Main electrical panel ... 127
5.1.12 Technical room electrical panel ... 132
5.1.13 Generator ... 134
5.1.14 Use of the generator ... 137
5.1.15 Generator control panel ... 138
5.1.16 Inactivity periods ... 139
5.1.17 Generator maintenance ... 140
5.1.18 Checking and cleaning the sea water intake strainer ... 143
5.2 WATER SYSTEMS ... 144
5.2.1 Bilge system ... 144
5.2.2 Bilge system maintenance ... 147
5.2.3 Bilge pump operation check ... 148
5.2.4 Fresh water system ... 149
5.2.5 Cold water system ... 150
5.2.6 Hot water system ... 152
5.2.7 Fresh water system maintenance ... 155
5.2.8 Air bleeding ... 156
5.2.9 Grey water system ... 157
5.2.10 Grey water system maintenance ... 159
5.2.11 Black water system ... 160
5.2.12 Scuppers system ... 163
5.3 WC TOUCH PANEL ... 165
5.3.1 Use ... 165
5.3.2 Setting of the courtesy light ... 165
5.3.3 Black water system maintenance ... 167
5.4 AIR CONDITIONING SYSTEM ... 168
5.4.1 Air conditioning system maintenance ... 170
5.5 INTERCEPTORS SYSTEM ... 171
5.5.1 Advice on interceptors operation ... 172
5.5.2 Interceptors system maintenance ... 173
5.6 BOW THRUSTER ... 174
5.6.1 Use of the bow thrusters ... 175
5.7 GANGWAY SYSTEM (OPTIONAL) ... 177
5.7.1 Gangway system maintenance ... 179
5.8 GYROSCOPIC STABILIZER (OPTIONAL) ... 180
5.9 SWIM LADDER ... 181
5.9.1 Swim ladder maintenance ... 184
5.10 GARAGE HATCH ... 185
5.11 BIMINI TOP ... 187
5.12 PROPULSION SYSTEM ... 189
5.12.1 Propulsion engines ... 189
5.12.2 Engine Specifications ... 190
5.12.3 Propulsion engine maintenance ... 191
5.13 GEARBOX ... 194
5.13.1 Maintenance of the gearbox ... 195
5.14 HYDRAULIC STEERING ... 196
5.15 FUEL SYSTEM ... 197
5.15.1 Fuel circuit ... 199
5.15.2 Fuel quality ... 201

5.15.3 Fuel system maintenance 202
5.15.4 Bleeding of separator filters 203
5.15.5 Separator filter cartridge replacement 203
5.15.6 Bleeding of filters 203
5.16 SEAWATER COOLING SYSTEM 204
5.16.1 Cooling system description 204
5.16.2 Engine gas exhaust ducts 206
5.17 VENTILATION SYSTEM 208
5.18 CATHODIC PROTECTION SYSTEM 210
5.18.1 Maintenance of sacrificial anodes 211
5.18.2 Replacement of sacrificial anodes 211

6- INFORMATION FOR USE
6.1 GENERAL INFORMATION 214
6.2 PRECAUTIONS FOR HARSH CLIMATES 215
6.2.1 Cooling system 215
6.2.2 Fuel system 216
6.3 PREPARING FOR NAVIGATION 217
6.3.1 Preliminary checks 217
6.3.2 Operation tests 218
6.3.3 Start of propulsion engines 219
6.3.4 Check after engine start up 221
6.3.5 Engine drive 221
6.3.6 Stop of propulsion engines 222
6.3.7 Emergency stop of propulsion engines 223
6.4 FIRST PERIOD OF USE 224
6.5 REFILLING 226
6.5.1 Fuel filling 226
6.5.2 Fresh water supply 228
6.6 MOORING AND UNMOORING 229
6.6.1 Mooring operations 229
6.6.2 Leaving the mooring 232
6.6.3 Mooring operation 232
6.6.4 Unattended mooring 233
6.7 ANCHORING 234
6.7.1 Anchoring operations 234
6.7.2 Anchor weighing 236
6.7.3 Anchor lowering 236
6.8 SUGGESTIONS FOR NAVIGATION UNDER SPECIAL CONDITIONS 238
6.8.1 Navigation with bad weather conditions 238
6.8.2 Significant speed - wave height table 239
6.8.3 The wind rose 241
6.8.4 Wind classification 243
6.8.5 Navigation with only one engine 246
6.8.6 Collision 247
6.8.7 Stranding 247
6.9 ENGINE EMERGENCY SUCTION FROM THE BILGE 248
6.9.1 Operating diagram 249
6.10 HAULAGE AND LAUNCH 250
6.11 DRAWING AND TOWING 253
6.12 BIMINI TOP 255
6.13 GANGWAY (OPTIONAL) 257
6.13.1 Manual operation of the oil control unit 259
6.13.2 Gangway system maintenance 262
6.14 SWIM LADDER 263
6.14.1 Inhibition sensor limit switch manual ladder and acoustic alarm 263
6.15 YACHT STEERING RULES 265
6.16 MAINTENANCE 268
6.16.1 General notes 268
6.17 LONG YACHT INACTIVITY 270
6.17.1 General rules 272
6.18 RE-USE OF THE YACHT AFTER LONG INACTIVITY 273
6.19 HULL MAINTENANCE 274
6.19.1 Bottom hull 275
6.20 GENERAL MAINTENANCE 276
6.21 SPEED MULTISENSOR MAINTENANCE (LOG SENSOR) 291

MANUAL ACCEPTANCE FORM 293

NOTE:

1 - FOREWORD

1.1 SAFETY NOTICES

To highlight particularly significant sections and/or to indicate some important requirements, some symbols have been defined as follows.

CAUTION

It indicates a reminder to apply certain safety measures or to avoid certain unsafe practices that could lead to personal injury or damage to the yacht, to its components or to the environment.



WARNING

It indicates the existence of a possible hazard that may lead to personal injury or death, if proper safety precautions are not taken.



DANGER

It indicates the existence of a serious hazard that could involve a high probability of death or serious injury if suitable safety precautions are not taken.



ENVIRONMENT

This symbol draws your attention to the possible hazards of environmental pollution.

NOTE / MAINTENANCE

It indicates general notes or maintenance for the various on-board equipment.

1.1.1 Specific safety warnings

They integrate the general safety notice and are aimed at providing specific information about the nature of possible dangers.

Fire hazard:
To indicate a specific fire hazard.



DANGER
The cause of fire breaking is described here.

Electric shock hazard:
To indicate a specific electrocution risk.



DANGER
The cause of electrocution is described here.

Burn hazard:
To indicate a specific burn hazard.



DANGER
The cause of burn is described here.

Forbidden areas:
To forbid the access, the transit or the stay in a dangerous area.



DANGER
This area describes the forbidden area: for forbidden areas are meant dangerous places or the approaching to mechanical moving parts.

1.2 USE OF TECHNICAL DOCUMENTATION

The documentation provided by RIVA to the Owner consists of two types of documents:

- The “Owner’s manual”, written by experienced professional staff in compliance with standard ISO EN 10240;
- The Technical Documentation Collection, concerning the on-board devices/systems (engines, air conditioning, etc..): it consists in a series of independent manuals, delivered by the relevant Manufacturer and/or Suppliers.

The Owner’s manual is the Main Document and must be read in whole, in any case before considering the documents in the Technical Document Collection.

The associated Technical Documentation Collection makes up the set of the Reference Documents that are required to complete the information provided in the Owner’s Manual. Since these documents are independent and aimed at elaborating on single specific components, it is necessary to refer to them when referred to by the Main Document.

This manual has been realized by the Builder in their mother language (Italian) and translated into other languages, to satisfy the customer’s requirements, and has been issued with the purpose of assisting you with the use of your yacht in full safety and with complete satisfaction.

We recommend that you carefully read through this manual so as to become familiar with its contents before starting to cruise for the first time.

NOTE

The Technical Documentation Collection must be stored in a sheltered, dry place that is not subject to high temperatures and, ideally, near the Owner’s Manual.
Moreover, take care of their condition, and of the Owner’s Manual as well: do not fill the pages with writing or scribbles, do not remove pages, do not soak or expose them to flames or cigarette burns.
Even when you are looking at them, do not expose the pages to the risk of being stained or soaked by any liquid (water, beverages, acids, oils, etc..).

CAUTION

RIVA recommends carefully reading the whole documentation delivered by the Manufacturers of the various components.
For all problems concerning the use and the maintenance of components, you can refer directly to the Service Departments listed in the documents delivered by the Manufacturers.
Anyway, in case of need, some little interventions can be carried out by the staff on board, after consulting the operation manual.

1.3 MANUAL INTRODUCTION

A great passion for the sea and the prestige of this yacht, its Owner, their Guests and the Crew are elements that encourage proper use and constant, regular maintenance to ensure long periods of navigation, a long life span and an ensuing improvement in safety.

The Owner's Manual is written in compliance with Directive 2013/53/EU and standard ISO EN 10240. The manual contains detailed explanations about the yacht, the systems and the equipment fitted, as well as information about the practical use of the yacht and its maintenance, and it is aimed at helping you achieve a safe and pleasant use of the yacht.

Moreover, the purpose of this Manual is to provide specific details and indications to personnel skilled in the operation of similar yachts and holding the required qualifications, acquired through examinations, specialization courses and experience acquired during previous on-board duties.

If this is your first yacht, or if this is a type of yacht that you are not familiar with, for your safety and to ensure your maximum satisfaction, make sure you have acquired sufficient experience about how to use and operate the yacht, before "taking the command".

CAUTION

The captain is deemed liable for persons, things and / or events that occurred on board.

CAUTION

The maintenance operations described in the manual are simple, but should be performed by authorised and qualified technical staff only, according to the standard procedures delivered by the devices Manufacturers and in compliance with national and international regulations. We suggest contacting the RIVA Service Department.

DANGER

This yacht can be steered only by authorized staff for the control and steering of leisure crafts according to their classification.

NOTE

This Manual shall always follow the yacht at each change of ownership. When you sell the yacht, it shall have to be delivered intact to the new Owner.
SANCTIONS ARE PROVIDED IF THE YACHT IS NOT EQUIPPED WITH THE "OWNER'S MANUAL".

NOTE

Although the manual has been specifically issued for your yacht, it is possible that some pictures of details in the manual do not fully match your yacht or that they do not reproduce the same colours of your arrangements.
This is due to the difficulty of taking pictures of details, such as bed covers and sofas, which are defined immediately before delivery of the yacht and, therefore, after the Owner's Manual has been written up.

CAUTION

Under no circumstances shall RIVA be held responsible towards third parties for damage or for imperfect correspondence of the manual with reality.

NOTE

Please remember to store this manual carefully in a safe, dry and easily accessible place so that it can be easily consulted.
If the manual is lost or worn out, RIVA shall always be able to provide you with a copy.

1.4 LAYOUT OF THE MANUAL

For easy and quick reference, the Owner's Manual is divided into:

- INDEX: index of topics.
- FOREWORD: aimed at providing general information about the Owner's Manual and about class certification and identification of the yacht.
- GENERAL SAFETY RULES: it indicates the general safety and fire prevention rules to be adopted during yacht use and maintenance; it contains the description of the safety equipment installed on board and specifies its proper use.
- DESCRIPTION OF THE YACHT: it specifies dimensions and main data of the yacht; it contains the description of the yacht in its main plans.
- HELM STATION: describes the utilities present on the yacht's wheelhouse.
- ON-BOARD SYSTEMS: it provides information about water systems, electric and government on board and their maintenance.
- INFORMATION FOR USE: it provides information about the proper procedures to be adopted when using the yacht, explaining the precautions to be taken and the proper way to carry out these operations respecting safety, the environment and the yacht itself.

1.5 SERVICE REQUIREMENT METHOD

The extensive RIVA service network is glad to provide you with any information regarding issues not addressed by the manual. Customers may contact Dealers, Sale Offices, Service Centres or directly:

OFFICE AFTER SALES & SERVICE RIVA
Via Ansaldo, 7
47122 - Forlì (FC) - Italy
Tel +39 0543 787511
Fax +39 0543 473069
customer.service@riva-yacht.com

RIVA has carefully selected all main components and accessories installed aboard your yacht, choosing among the most reliable manufacturers who, by offering a wide service network, also guarantee a speedy availability of spare parts. Such components are covered by their own warranty released by the relevant manufacturers; any type of intervention shall be carried out by technicians authorised by RIVA; failing to comply with this prescription will void the warranty and may cause damage to the equipment.

CAUTION
RIVA declines all responsibility for damage due to improper preservation and poor maintenance.

CAUTION
RIVA declines all responsibility for the installation and operation of electric, electronic or mechanical equipment improperly installed by third parties in a fashion not authorised by the Shipyard.

WARNING
RIVA declines all responsibility concerning tampering carried out by third parties on equipment installed in the Shipyard. Such tampering or unauthorized installations will not only void the warranty, but may cause damage to the yacht and injuries to the people on board.

NOTE
For all aspects regarding the warranty of the yacht, exclusively refer to what indicated in the sales agreement and in the warranty certificate which specifies all warranty conditions applicable to the purchased product.

CAUTION
Engines, winches, extractors and other equipment are guaranteed by the relevant manufacturers, who should assist directly or by means of their structures. If necessary, the Service Department of RIVA will support your requests in order to provide you with a quick service and to guarantee the respect of the applicable rules. When purchasing the yacht, the Owner should send the certificates to the relevant manufacturers for starting the warranty period; RIVA is not responsible for ensuant Warranty Certificates.

1.6 CLASSIFICATION AND IDENTIFICATION CERTIFICATION

RIVA has been operating in the international market for many years, with the purpose of building safe and high-quality yachts; for this reason, their yachts undergo rigid and accurate tests required by the international Authorities to issue a CLASSIFICATION CERTIFICATE.
Your yacht has obtained the RINA S.p.A. (REGISTRO ITALIANO NAVALE) classification, after supervision of the hull lamination, of reinforcement structures, of power system and on-board safety equipment.

1.6.1 Yacht identification data

Manufacturer: **FERRETTI S.p.A.**

Model: **R38 RIVAMARE**

Type of yacht: **MOTOR YACHT**

Craft identification number (CIN): **IT-FERRRM94K425**

Design category: **B**
A yacht given design category B is considered to be designed to operate in winds up to Beaufort force 8 and the associated wave heights (Significant wave height up to 4 m [13 ft]). Such conditions may be encountered on offshore voyages of sufficient length or on coastal waters when unsheltered from the wind and waves for several dozens of nautical miles. These conditions may also be experienced on inland seas of sufficient size for the wave height to be generated.

Classification: **“EC” conformity according to the requirements of Directive 2013/53/EU.**

Classification authority: **RINA (Registro Italiano Navale)**

Certification forms: **B+F**

1.6.2 Load-carrying capacity

- Maximum number of passengers allowed on board: **n°8 (RINA classification)**
- Maximum load recommended: (people + luggage) = **1335 kg (2943 lb)**
- Safety equipment: **n°8 (standard)**
- Berths: **n°2** arranged as follows:
  n°2 in the Owner’s cabin (double bed)

DANGER
Never exceed the maximum load and the maximum number of people allowed on board.
People and/or loads should be distributed evenly on board.

The Manufacturer’s plate, installed under the helm station on the port side, which indicates the maximum yacht capacity. The identification plate, starboard of the aft transom, which indicates the yacht identification code.

CAUTION
Manufacturer’s plate - Part of the information is provided on the nameplate affixed to the yacht. A full explanation of this information is provided in the relevant sections of this manual.
Always keep the plate readable, and, if impaired, or tampered with, contact RIVA.

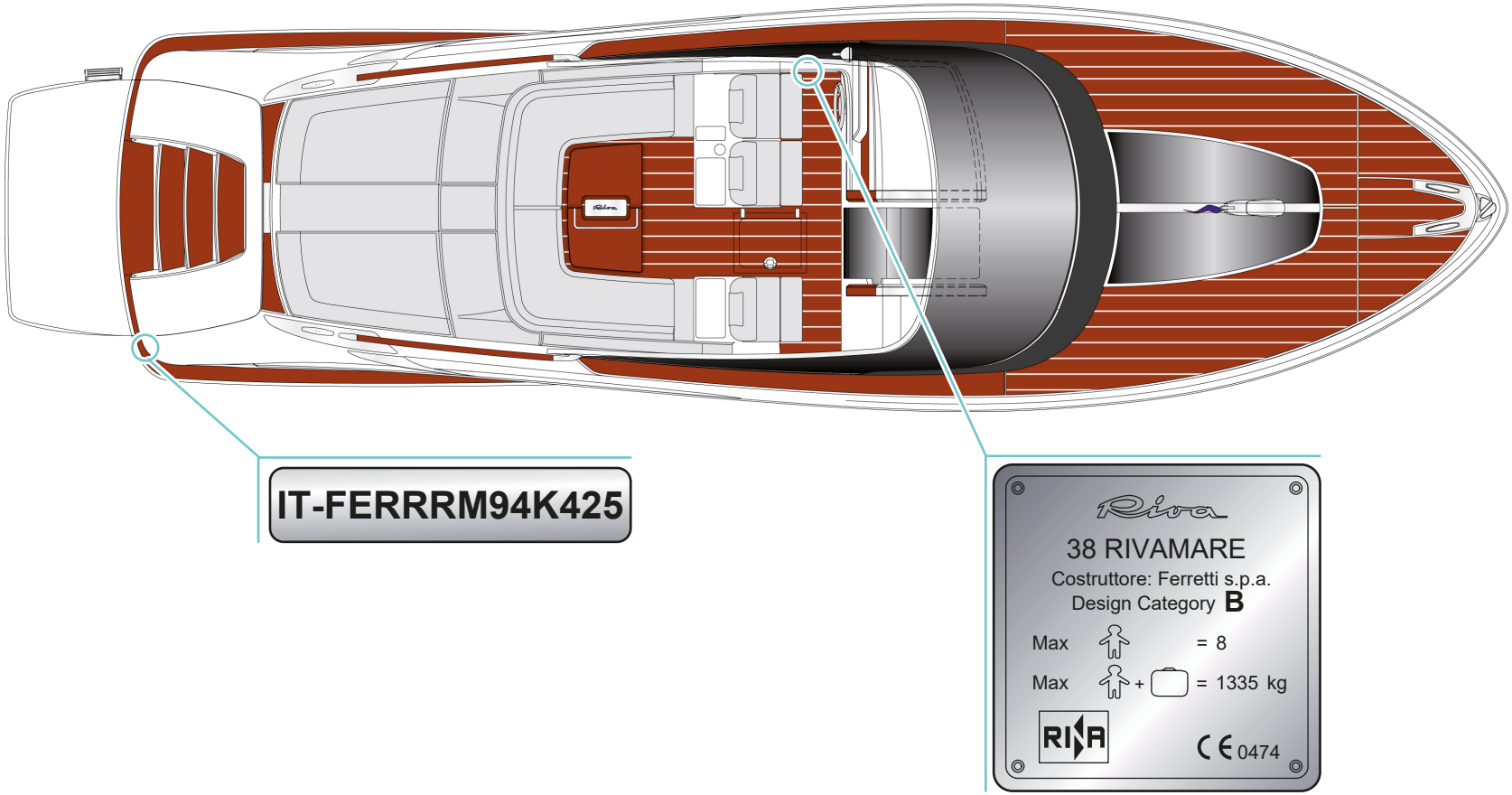
IT-FERRRM94K425
Riva
38 RIVAMARE
Costruttore: Ferretti s.p.a.
Design Category B
Max = 8
Max + = 1335 kg
RINA
CE 0474

NOTES:

2 - GENERAL SAFETY RULES

2.1 GENERAL SAFETY RULES

Your yacht has been designed paying the utmost attention to all aspects regarding your safety and the safety of your guests. However, all personnel on board must be instructed and be made aware of some precautions to be adopted at all times.
For this purpose, it is advisable that all people on board carefully read the guidelines contained in this manual, as well as the signs (labels) installed on the yacht and, in particular, all safety notices.
The time spent in reading such instructions will prevent unpleasant accidents.
Remember that you are responsible for your safety and the safety of your passengers, and that you may jeopardize the safety of other yachts.

Please make sure you are perfectly aware of the main safety rules:

- During normal operation or any activities on the yacht, keep passageways and escape routes in proper conditions, in order to avoid hazards to people's safety;
- Always perform regular inspections to verify the conditions of the yacht hull, engines, safety equipment and systems;
- Always check the fuel level before navigation and compare the tanks' capacity with the engine consumption, the length and the expected type of cruise;
- Check the expected weather conditions in the area you want to reach and along your course;
- In any case, always act according to common sense.

Safety is also "in the hands" of everyone on board, who should be instructed and be made aware of some precautions to be adopted all times:

- Moving on board requires some attention, since the stability of the yacht may be abruptly affected by the action of waves or sudden manoeuvres;
- People on board must know the location of all life jackets, how to wear them, the position of the fire-extinguishers and of the life-raft;
- All passengers must be perfectly aware of the risks caused by a fire, and the correct way to proceed in the event a fire should occur;
- All people on board must know what to do and how to behave in case they are to leave the yacht;
- The engine room must be properly ventilated when the engines or the generator are running or in the cooling phase; air intakes, therefore, must always be open and free from obstructions.
- Access to the engine room must only be allowed to authorized personnel, aware of possible dangers generated by:
  - Moving mechanical parts;
  - Hot parts and components;
  - Circuits with pressurized, hot or irritating fluids;
  - Circuits with flammable fluids;
  - High noise levels when engines are running;
  - Risk of unintentionally operating controls or valves that are important for the safe conduct of the yacht.

Do not tamper with, disconnect, eliminate or by-pass the safety devices installed on the yacht. Periodically have the efficiency of the equipment inspected and tested by expert and authorised personnel, in order to ensure operation in case of need. Failure to meet such requirements may originate serious risks for the safety of your passengers and of your yacht.

Personnel performing any type of operations, maintenance, repair or other service during the lifetime of the yacht must be technically qualified and have proven abilities and experience acquired and recognized in this specific field, and follow the instructions of the equipment manufacturer.
The lack of such requirements may cause damage to the yacht and jeopardize the safety of people. Make sure any parts not stored or not secured correctly, cannot move during navigation, hinder the passage, prevent the opening of inner hatches, fall against the people on board, damage or hinder the quick finding of necessary tools in case of emergency.



DANGER

Carbon monoxide

Incomplete combustion of fossil fuels produces high quantities of carbon monoxide, which is a very toxic and dangerous gas, as it is colourless and odourless.
Proper ventilation of the yacht is therefore necessary with running engines or generator.



DANGER

The personnel operating the yacht during the various activities on board must not be under the influence of alcohol, drugs or narcotics.



DANGER

It is strictly forbidden to stay on the weather decks outside the protected areas (i.e. aft platform) during navigation.



DANGER

When the yacht is being loaded, never exceed the maximum load carrying capacity.
Always take great care when loading the yacht and try to distribute the loads evenly so as to keep the correct trim.
Avoid placing heavy loads in the upper part to not reduce the stability.

2.1.1 Use-related rules

Your yacht has been realised with the utmost care by RIVA to grant the best possible reliability and safety to the persons on board.
It is anyway necessary to remember that these conditions, even if necessary, are nevertheless not sufficient, as reliability and safety are based upon strict and continuous observance, by the Owner and his/her Guests, of the so-called “On-board Ethics”.
“On-board Ethics” means all those behaviour rules which all persons on board must strictly observe in order not to jeopardize the product that the Builder realised with so much care and professionality.
Naturally, behaviour rules to be observed on board differ depending on the activity to be carried out.
For example, the Captain is allowed to carry out manoeuvres through the equipment on the helm station and to access hazardous areas being aware of the risks; on the contrary, persons not allowed to operate the steering equipment or to access dangerous areas must be instructed in not staying or passing there for any reason.
Distribute loads so as to maintain the correct trim, do not overload the yacht, especially at bow and stern.
Observe the rules to prevent sea collision and the respect the speed limits; moreover always pay the utmost attention during navigation.
After becoming duly informed as to the operation and controls of the yacht, at first use the Captain should simulate some test manoeuvres with the aid of the Shipyard personnel, to familiarize with the controls and be aware of the typical reactions of this yacht.

DANGER
The Captain is the only person responsible for driving the yacht.
Prior to departure, the Owner must ensure that the safety equipment required by law is present on board and perfectly working.

The main operational steps, such as getting underway, navigation, anchoring and mooring must be carried out and verified scrupulously. In particular, all pre-departure procedures must be strictly followed.
All refuel phases must be carried out taking all the precautions necessary to guarantee safety and to prevent even the smallest spillage of products which could pollute the surrounding environment.
When navigating near harbours, beaches and shores, observe the directives issued by local port authorities, particularly as to the speed; high speed can originate waves which can jeopardize the safety of the environment and of people.
Before lowering the anchor in free waters, check if it is allowed and verify the type of sea bottom, to prevent damaging or upsetting the surrounding marine habitat balance.
When entering and exiting, make sure that steps, handles and shoe soles are clean and dry.
In order to prevent the risk of injury, the instruments in the helm station must only be used from the correct piloting position.

DANGER
At high speed, the use of the autopilot is dangerous and not recommended.
Even when the autopilot controls the route, maintain a proper watch on navigation at all times.

DANGER
Do not use the yacht if the safety equipment is inoperative.
Failure to meet this requirement may originate serious risks for the safety of your yacht and of your passengers.

CAUTION

Close portholes, windows and skylights during navigation, especially in poor weather conditions.
Also, make sure that you have closed or locked doors to prevent collisions with objects or people.

CAUTION

Avoid sudden manoeuvres at speed.

CAUTION

For safety and comfort reduce yacht speed over waves.

2.1.2 Maintenance rules

In this section important information is given to enable you to operate the various components of the yacht without any hazard.
Besides the warnings given below, specific warnings have been distributed in the whole manual. This section is meant to give a safety code of behaviour for the operation and for maintenance procedures.
Periodical maintenance, including daily inspections, are important to keep the equipment/components in the best possible efficiency conditions; failure to comply with a proper maintenance schedule may degenerate causing a decrease in performance reliability and a shorter life. Furthermore, failure to observe the maintenance schedule leads to unexpected problems that can decrease safety at sea.
Therefore, you must read and understand the information given in the various related technical manuals delivered before acting and operating.
If you are not sure about something concerning the work to be done, refer to our Service Centre or to the one of the equipment's manufacturer.



DANGER

Always operate with caution, care and under safety conditions.

Before carrying out maintenance and adjustment operations on your yacht, activate all safety devices provided and evaluate if it is necessary to inform all persons on board.

In particular, according to the regulations in force, place warning signs in the areas that can be affected by the activity and prevent accessibility to any device or equipment that, if enabled, could cause hazardous conditions endangering persons and/or property on board.

Maintenance and adjustment operations must be carried out by qualified, authorized personnel who must use all necessary protections according to the regulations in force.

All maintenance operations requiring a specific technical expertise or particular skills must be carried out exclusively by authorised and qualified personnel with a recognised experience, acquired in the specific field of intervention.

Before carrying out maintenance and adjustment operations on your yacht, activate all safety devices provided and evaluate if it is necessary to inform all persons on board.

In particular, according to the regulations in force, place warning signs in the areas that can be affected by the activity and prevent accessibility to any device or equipment that, if enabled, could cause hazardous conditions endangering persons on board and/or property.

Maintenance and adjustment operations must be carried out by qualified, authorized personnel that shall provide for all necessary protections according to the regulations in force.

All maintenance operations requiring a specific technical expertise or particular skills must be carried out exclusively by authorised and qualified personnel with a recognised experience, acquired in the specific field of intervention.

Persons performing maintenance operations in barely accessible or dangerous areas must provide for their own safety and that of any other persons involved, in compliance with existing workplace safety regulations.

If necessary, wear individual protection means required by the task to be performed.

During navigation, access to the engine room must be limited to authorized and properly equipped personnel only.

Inspect the sea water system inlets and outlets as well as the bilge systems.

These checks are vital to ensure the yacht buoyancy.

Do not perform any maintenance operations or adjustments other than those indicated and/or suggested by the Manufacturer.

If necessary, contact the Service Centre for more precise instructions.

Keep all yacht's components clean by following the procedures and using the specific products suggested by the Manufacturer.

Use the oils and lubricants recommended by the Manufacturer. This will ensure the expected safety level for yacht operation.

Only replace worn parts using original spares.

Carefully read the instructions for use before performing maintenance or starting the yacht or any component.

CAUTION

The use of faulty lifting attachments can be the cause of accidents; check therefore their efficiency. Ensure the compliance of hoisting gears with local norms and their suitability for the job to be performed.

CAUTION

The use of unsuitable clothing can cause accidents; do not wear flapping clothes that could be easily caught by the moving parts of the yacht. Wear protective clothes suitable with the kind of work to carry out (helmets, safety shoes and protective goggles, overalls). Button up the cuffs, do not use ties or scarves and do not leave your long hair loose.

CAUTION

It is extremely dangerous to operate the yacht controls under the influence of alcohol or drugs. Keep off from taking alcohol or drugs before and during the work. Do not take drugs which could cause drowsiness.

DANGER

Insufficient information may cause accidents. If two or more persons are working simultaneously on the same engine, make sure that each of them is aware of the operation carried out by the others. Therefore, prepare a working plan so as to avoid any interference or hazard.
Before starting an engine, get other persons away from hazardous areas. Failure to comply with these precautions may cause serious injury, and even death.
When performing maintenance operations inside the engine room, you must make sure that the engine cannot be started from the helm station by unauthorized persons.



DANGER

Keep the whole working area free of oil and grease stains, especially the area around the engine, the walk-around and the staircases. Injury due to slipping may have serious consequences.
Oil leakage at operating pressure can cause injury: before disconnecting or connecting the hoses, stop the engine and operate the controls to release the residual pressure. Prevent the engine start when the hoses are disconnected.
When the outer temperature falls below 4°C (39°F) inside the ducts where water flows, there is the risk that the water freezes inside them and, thus, that breaks occur.
Gaskets and O-Rings assembled in a wrong way and/or damaged and/ or worn out may cause leaks or damage; replace them immediately.



DANGER

The battery produces explosive fumes; do not approach with flames and sparks nor smoke in its vicinity. If the battery is used or charged in a closed area, make sure good ventilation is provided. Do not check the battery charge by short-circuiting the terminals with metal tools (the battery may explode): use a density gauge or a battery tester. The electrolyte contained in the batteries is extremely corrosive: while charging or handling of the batteries, we recommend protecting your skin, eyes and clothing. Always use safety glasses and gloves. If the electrolyte gets into contact with the skin, rinse as soon as possible by washing with water and soap. If eyes are involved, immediately rinse with plenty of water and then ask for medical assistance.
Move away from the working area or adequately protect possible flammable materials, which could catch fire from sparkles.
Possible sparks produced by the electric system may cause explosions and fires. Avoid starting the yacht in the presence of flammable materials, liquids, vapours or flammable powders.
Fuel is flammable and explosive: do not approach with flames, do not smoke while refuel or while working on the engine. Carry out refuel with engine shut off. Failure to comply with these precautions may cause fires with hazard of serious damage to property and injury to persons.



DANGER

Suspended loads may fall and injure you. Do not walk or work under lifted devices not sufficiently and safely supported.
Due to moving mechanical parts, when working on the shafting and on engine parts, absolutely prevent starting of the latter.



DANGER

Before performing tasks on the electric system, always cut off power supply on the whole system or on the component on which you are operating, in order to prevent risks of shocks or electrocutions.
If necessary, first disconnect the negative cable from the battery and then connect it last to prevent short circuits.



DANGER

Precautions to safeguard your health:
Oil, fuel and antifreeze are toxic substances: do not swallow.
These substances also contain dangerous contaminating agents which may cause damage to the skin.
Protect your eyes from accidental splashes of toxic substances by using safety goggles.
Store products and technical fluids for yacht operation (such as antifreeze) only in containers that cannot be mistaken for beverage holders.
Due to long and repeated contact with engine oil of any type, the skin can degrease and dry out with consequent irritation or even inflammation.



DANGER

Nevertheless, if all basic rules for protection at work and hygienic rules are observed, no harm for health can be expected even if handling old engine oil.

- Avoid long and repeated contact of the skin with toxic substances.
- Protect the skin with suitable protective products or with safety gloves.
- Clean the skin by washing it thoroughly with water and soap. A valid help can come from special hand detergents and a brush. Do not use any fuel, thinners or solvents to clean the skin.
- After cleaning, treat the skin with special greasy cream.
- Change oil-soaked clothes and shoes.



DANGER

If, notwithstanding precautions, injury should take place, in particular due to contact with caustic acid, penetration of fuel in the skin, scalding from hot oil, antifreeze splashes in the eyes, etc.., immediately require medical assistance.

DANGER

Coolants are hot. When engine temperature is high, the cooling system is under pressure and, by removing the heat exchanger plug, the hot liquid can come out as a jet! Therefore, wait for the system to cool down before removing the plug, and then very slowly turn it up to the first notch and release the system pressure.
During operation, as a precaution, always cover the plug with a rag.

NOTE

RIVA declines all responsibility for the installation and operation of electric, electronic or mechanical equipment improperly installed by third parties in a fashion not authorised by the Shipyard.
RIVA declines all responsibility concerning tampering carried out by third parties on equipment installed in the Shipyard. Such tampering or unauthorized installations will not only immediately void the warranty, but may cause damage to the yacht and injuries to the people on board.
RIVA declines all responsibility concerning periodical maintenance activities scheduled by the Shipyard or by Manufacturers, but not carried out, on equipment/components, for which it is necessary to refer to their own Technical Manuals.

2.2 FIRE PREVENTION RULES

Before steering a yacht, the Owner must be perfectly aware of and trained on the following fire prevention measures.
The yacht must always be equipped with portable extinguishers, located as shown in the diagram “Arrangement of safety equipment”.

DANGER
On all yachts, fire is a major danger. All fire prevention measures must be followed scrupulously.

The yacht’s Owner is directly responsible for:
- Having fire-extinguishers and fire-fighting systems overhauled by the date shown on the labels of each single extinguisher and have them replaced, as required by the rules in force, with other extinguishers of equivalent or even higher capacity;
- Informing the crew about the location and use of fire extinguishers and fire-fighting systems and escape routes;
- Ensuring that fire extinguishers are also available in the passengers’ cabins.

DANGER

Never
- Obstruct passageways and the escape routes;
- Hinder access to safety devices, such as fuel valves, electrical switches, etc..;
- Obstruct access to fire extinguishers stowed inside the lockers;
- Leave the yacht unattended, when burners or heat generating equipment are on;
- Use naked flames;
- Modify electric or fuel supply systems, without consulting RIVA beforehand;
- Smoke near or when handling flammable materials;
- Stow highly flammable materials (such as fuel, thinners, etc..) in proximity to heat sources, such as engines, galley, etc..;
- Stow flammable material in the engine room. Non-flammable materials may be stowed only if properly rigged, so they do not accidentally come into contact with rotating engine parts, or obstruct access to the engine room.

Keep bilges clean and check frequently for oil and fuel leaks.

NOTE
Carefully read the prescriptions regarding the fire-extinguishing system and its use.



DANGER

In case fire breaks out in proximity to electrical equipment, do not use water, use the manual dry-powder fire extinguishers only. After using the extinguishers, leave and ventilate the area immediately before re-approaching it, in order to prevent asphyxia and physical harm.
Clean out any fire extinguishing powder very carefully.

Besides the above-mentioned rules, RIVA recommends the following:

- Avoid smoking lower deck, especially in the engine room.
- Avoid dropping liquids in the bilge; keep it clean, especially the bilge of the engine room. In case of fuel leaks from the engines or from the generator, operate as follows:
- Stop all engines immediately;
- Locate the leakage and, if possible, repair it after closing the delivery valves;
- Dry and clean the bilge before restarting the engines.

In case of fire, follow the procedures described below:

- Keep calm and do not spread panic among the passengers;
- Stop the yacht, close the sea cocks and the overboard drains;
- Stop all pouring operations of flammable liquids;
- Locate the fire and its origin;
- Avoid breathing smoke;
- Extinguish the fire, by following standard fire extinguishing techniques.

NOTE

The Captain of a leisure craft must be perfectly aware of the basic fire fighting techniques and how to use the extinguishers.



DANGER

In case of fire on board, try to electrically insulate the area concerned by disconnecting all AC and DC input magneto-thermal switches to avoid feeding fires and short circuits.

NOTE

The reading of this section, containing all the information the Owner of the yacht should know, is strongly recommended.

2.2.1 General fire prevention rules

A regular and correct maintenance of the systems and a cautious behaviour of all passengers are indispensable measures for preventing any risk of fire. Over 90% of the probabilities of fighting a fire successfully, depends on the ability to prevent and avoid any condition that may favour a fire to spread. The small remaining percentage depends on the crew's reaction ability, and most of all, their rapidity to enter into action.
Nearly all fires, if early detected, can be extinguished easily.
For these reasons, it is necessary to carry out preventive surveys on a regular basis and identify all possible fire sources, and in particular:

- Check the proper operation of all main equipment/systems;
- Visit all compartments and in particular the engine room frequently;
- If a system does not work correctly, identify the failure and take the appropriate corrective actions;
- Operate all systems and equipment as specified;
- Not stow on-board flammable materials where not expected.

If a fire is detected, determine and remove the cause, if possible, (e.g. in case of a short-circuit, cut-OFF the electrical system), extinguish the fire promptly and be vigilant to make sure that the fire does not break out again.

CAUTION
Never use water jets to extinguish fires on electric or electronic equipment.

WARNING
EXPLOSION HAZARD
Any lithium battery powered device on board must be recharged only in open air areas, connected to a suitable charging system. Also please refer to the device dedicated Use and Maintenance Manual.

CAUTION
The ability to operate the fire extinguishers properly can ensure the success of the operation.
It is vital that the fire fighting operations are performed by people competent in this type of emergencies.
It is anyway necessary to be aware of the minimum fire-prevention and fire-fighting rules; the first defence is to prevent fires before they start spreading.

The following table contains the classification of the fire types:

Comparison between fire classes

America	Europe/Australia/Asia	Fuel/Heat source
Class A	Class A	Ordinary fuels
Class B	Class B	Flammable liquids
	Class C	Flammable gases
Class C	Class E	Electric appliances
Class D	Class D	Combustible metals
Class K	Class F	Cooking oil or fat

It is very important to use the correct extinguishing agent according to each fire class; normally, water can be used only for class A fires, together with chemical extinguishing agents (portable or fixed devices).

2.3 DANGEROUS AREAS

On board the yacht some areas are “dangerous“, and need plenty of care, and possibly require wearing protective equipment, in order to safeguard the integrity of people on board.



DANGER

During navigation, the risks relating to any hazardous area increase significantly; we recommend scrupulously observing the safety rules indicated in this manual.

The areas are following:

- Engine room: area with a high level of noise, presence of moving components, burns hazard, tripping and falling hazard. The access to the engine room is only allowed to trained and expert crew, prepared for the risks and equipped with proper safety devices, if necessary;
- Stern platform and bow area: outer area not protected by rails against falling into the sea. During navigation access to this area is forbidden. Accessing and staying in this area is allowed only when the yacht is idle and with the engines shut off.

When underway, passengers can stay in the cockpit, preferably remaining seated. When moving, passengers shall use the special handrails installed in the cockpit.
In case of a fall overboard, the following rescue devices can be used:

- Life buoy;
- Life vests.

The easiest way to climb on board is from the stern platform by means of the stainless steel swim ladder stowed inside the stern structure when not in use.

The following diagram marks out the dangerous areas, with different colours according to the risk level (yellow = dangerous area, red = extremely dangerous area), where utmost care must be paid.



DANGER

Be careful when the deck is slippery. Do not walk on the deck in case of bad weather, when the deck is wet, without shoes with rubber sole or when the yacht is moving.

NOTE

It is responsibility of the Captain to inform all persons on board about dangerous areas when they exist, possible areas temporarily forbidden when maintenance operations are being carried out, as well as about the correct behaviour to be adopted in the above-mentioned areas, also according to weather and sea conditions.

CAUTION

All the areas where there is polished fibreglass are no-step areas.



DANGER

The Captain is responsible for ensuring boarding with the ladder extracted every time the yacht is not in operation (meaning not navigating) although attended.

Dangerous and forbidden areas

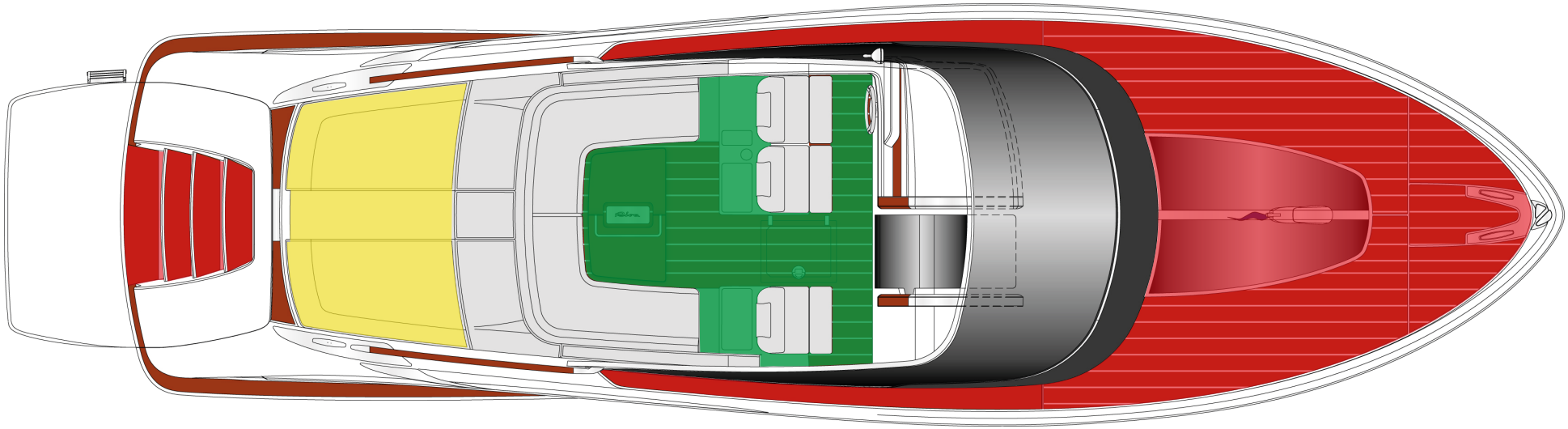

Forbidden areas

The side walk-around, the bow deck and the stern platform, highlighted in red, are not considered as “working deck”.

Working deck

Standing or walking is allowed in this area, highlighted in green, during navigation, while it is forbidden to stand or walk on the cockpit seats.

Regulated-access area

Sunbathing is allowed in the sun-deck area highlighted in yellow which, anyway, is not considered a “working deck”.

2.4 ENVIRONMENT REMARKS

Environmental pollution is caused by three kinds of polluting agents:
- Water polluters;
- Air polluters;
- Soil polluters.

Non oily and black waters (containing only human organic waste) can be discharged into the open sea. In harbour areas they should be collected into suitable containers and afterwards discharged either during navigation into open sea or by means of special drainage systems fastened to the shore or wheel-conveyed.
Soil pollution is also caused by discharging waste at shore.
International rules for leisure crafts essentially prescribe the following:

- During navigation it is forbidden to discharge any non biodegradable product, either of food or commercial origin into open sea.

- In the harbour, normal waste is considered as urban waste that must be hermetically sealed in plastic bags and thrown into waste dumpsters.

- Special waste must be disposed of in suitable containers or, if these are not available, it must be delivered to local waste disposing areas, in compliance with the rules in force, issued by the local Port Authority.

- The following waste is considered special waste:
  - Water and oily mixtures (e.g. Bilge water);
  - Oils (fuel, additives and lubricants);
  - Poisonous chemical substances (like battery acids, paints, thinners and the relevant containers);
  - Spray cans containing C.F.C. gas;
  - Batteries;
  - Spent flares;
  - Expired pharmaceutical products;
  - Products containing lead or asbestos;
  - Etc..

- Fuel and oil leaks

- Waste discharge and disposal

- Excessive noise

- Wake / wake from board

- Exhaust fumes

- Paints, detergents and other agents

Please remember that, according to legislation, until such waste is delivered to suitable disposal areas, you will be considered as possessors and therefore indictable in case of unlawful discharge. Should specific cases be missing in the harbour area, the Authority in charge for the disposal is the Port Authority section “Waste Disposal”.

2.5 REGULATIONS FOR WASTE DISPOSAL

MARPOL 73/78 is the international convention governing the prevention of pollution from ships.
These regulations are applicable to all ships, regardless of their displacement and service; therefore, leisure crafts are also included.
The regulations apply to the entire Mediterranean Sea.

CAUTION

When moored in a harbour, always check that your yacht is not a source of pollution. The environment must be respected and safeguarded, preventing risks for the life of aquatic flora and fauna. It is good practice to leave no trace behind you, to respect laws on safety and environmental protection. Do not discharge bilge waste, oily residues, fuel or other liquids overboard. Dispose of solid waste and old engine oil in the containers provided at mooring points.

CAUTION

During navigation, it is always necessary to behave suitably and to respect the safety and the comfort of your guests and of persons on nearby yachts. Therefore:

- Avoid excessive noise;
- Do not leave the engines running for long periods without moving off;
- Do not cruise at high speed or beyond the permitted limits when leaving or entering harbours, marinas, etc.., to prevent causing excessive wash or wave motion.

ENVIRONMENT

It is absolutely prohibited to throw plastics, synthetic cables, fishing nets, waste bags, floating packaging materials, paper, rags, metals, bottles, galley utensils and similar waste into the sea. Non comminuted or unground food waste can only be disposed of beyond 12 miles.

Although discharge at sea, except in special areas, of a wide range of ship-generated garbage is permitted at specified distances from the nearest land, preference should be given to disposal at shore reception facilities.

2.6 ESCAPE ROUTE PLAN

In order to cope with the different emergency situations that could determine the abandonment of the yacht (fire, collision with sinking hazard, etc..) in the quickest and safest way, the rules in force require an “escape plan” informing about the safest as well as quickest paths for taking shelter and reaching the “muster stations”, located outdoors, from which it will be easier to leave the yacht.
The diagrams shown hereunder indicate, for the lower deck, the escape routes and the paths to be used in case of need.
For this purpose, use the staircase that connects the Owner’s cabin and the salon with the cockpit.
In order to escape from system room and the crew cabin, use the hatches giving access to the cockpit.

CAUTION
Always keep the escape routes, dry, free and accessible.

CAUTION
The staircases must be carefully used during navigation.

DANGER
The on-board personnel must ensure that escape routes and paths are always free and accessible.

CAUTION
All people on board must be aware of the risks and dangers that they can meet when aboard the yacht.
In particular, they must know which are the safest escape routes under different emergency conditions.

DANGER
While underway, the access to the technical cabin is restricted only to qualified personnel.

Escape route diagram

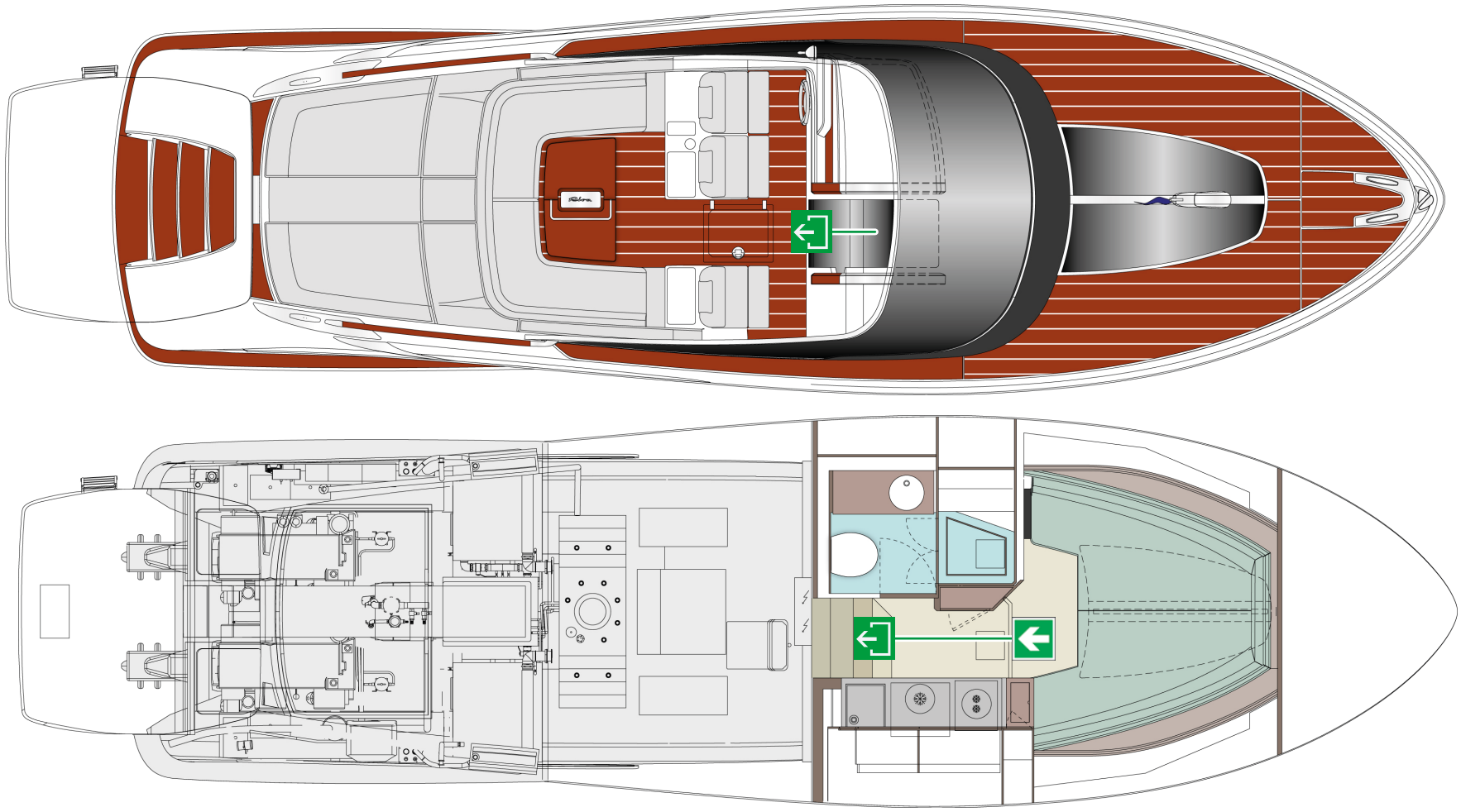

Escape route

Escape

2.7 SAFETY EQUIPMENT

RIVA has equipped your yacht with specific equipment to ensure guarantee the highest possible degree of safety even in the most dangerous situations. To ensure its effectiveness, however, all passengers must know the location and proper use of the safety equipment.
The on-board safety devices are:

- n°8 individual life jackets, stored in an easily accessible location;
- n°1 type-approved life buoy, equipped with floating, non-wrapping line and light-emitting buoy;
- n°2 self-inflatable life raft with 4 seats;
- n°2 portable dry chemical fire extinguishers, stored in various locations of the yacht, indicated by an appropriate plate;
- n°1 fixed HFC 227 gas fire extinguisher, located in the engine room's fore zone, to protect the engine room itself;
- n°1 fixed HFC 227 gas fire extinguisher, located in the technical room to protect the room itself;
- n°1 VHF radio-telephone installed in the helm station.

DANGER

The above-mentioned safety systems must comply with the existing local and international navigation regulations, and must be periodically inspected by specialized companies and qualified technical personnel, prior to the expiration date indicated on the systems.

CAUTION

The Captain is required to inform the crew on the yacht about the safety equipment, whether in case of fire or in case of sinking and listing.

CAUTION

The diagram indicates the positioning provided by the manufacturer for the various safety equipment; it represents therefore a reference as to position and code. The Owner is responsible for the updating and ranking of the various safety equipment in compliance with the local, national and international legislation in force.

Safety equipment diagram

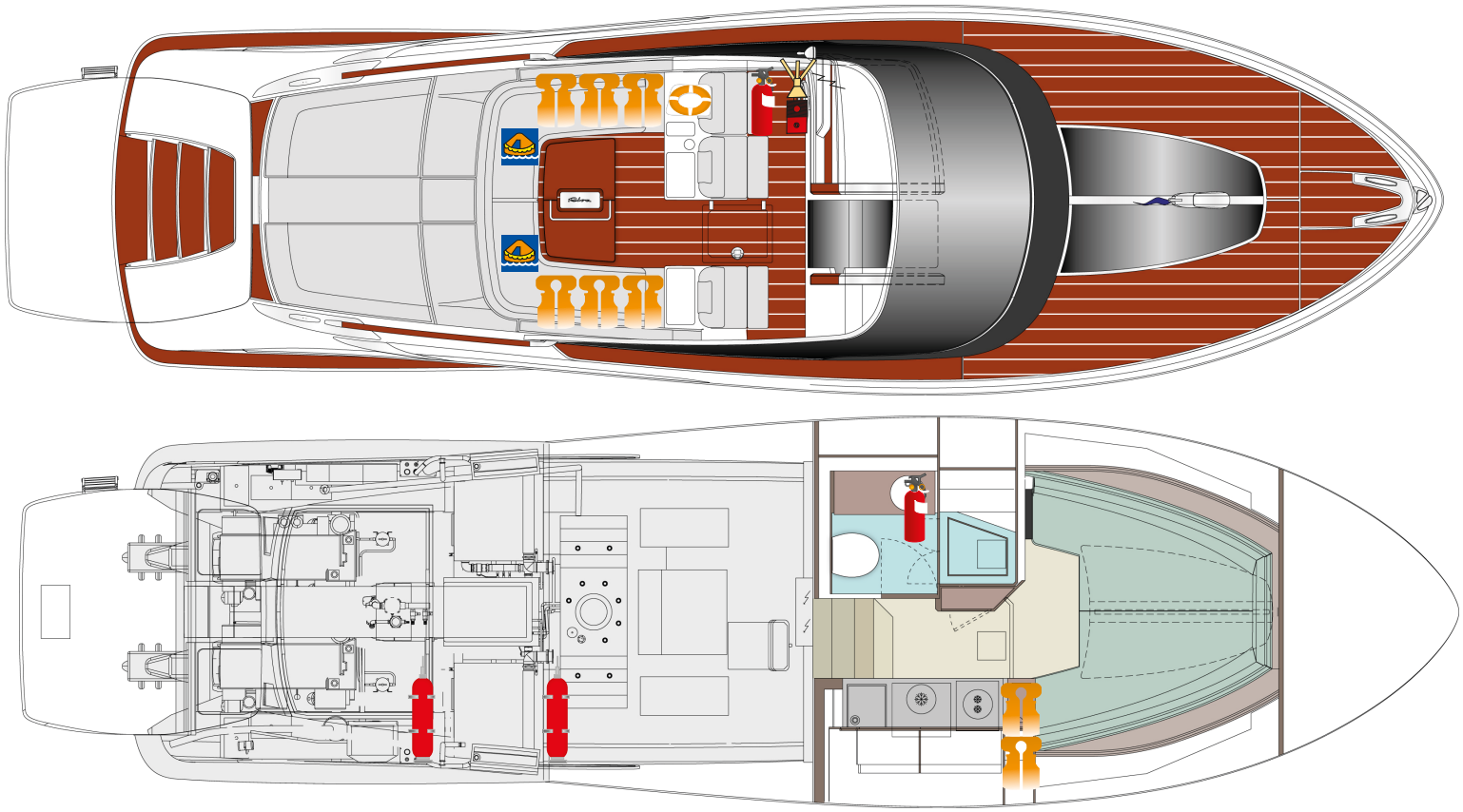

Self-inflatable life raft

Individual life jacket

Fixed gas fire extinguisher

Life buoy

Portable dry-chemical extinguisher

VHF-Radiotelephone

2.7.1 Safety plates

The plates applied on the yacht are used to point out special risks: each plate is located on the part of the yacht which can be a source of risk.

Before working with or on this part of the yacht, read the safety warning carefully.

Keep all the plates clean and readable, replace them if missing or damaged.

The fire extinguisher  plate is located adjacent to each fire extinguisher.

2.7.2 Emergency boarding system

Recover a man overboard before possible hypothermia or drowning. The time of permanence afloat depends on critical conditions of the water, on swimming capacity, on the presence of bulky clothing, intoxication, possibly injury and debilitation.
Recovering a man overboard depends on the capacity of manoeuvring the yacht (knowledge of the yacht's speed and turning capacity) and on the experience concerning rescue procedures.
Rescue is a combination of actions: reach the man overboard, establish a contact and bring him/her on board.

- Keep a visual contact with the man overboard.
- Slow down and go towards the man overboard. At night, direct the best light source available towards the man overboard.
- Launch the life buoy into the sea, towards the man overboard, and fasten it to the yacht by means of a line. It shall be used as a further reference to the rescuers.
- When approaching the man overboard, stop the yacht or slow down.
- When you are near the man overboard, stop the engines with the gear engaged, in order to avoid that the propellers continue rotating.

Help the man overboard board the yacht. The person shall generally board the yacht from the stern, through the boarding system. If the man overboard is injured, an expert rescuer may wear some floating rescue equipment tied with a line and enter the water to give assistance.

NOTE

If the victim presents drowning symptoms, give specific assistance. In case of serious danger, immediately make a distress call.

WARNING

In case of fall in the water, to go up on the yacht, use the special handrails **(1)** positioned aft.



2.8 FIRE-FIGHTING SYSTEM

RIVA has made every effort, both as regards design and construction, to minimize the risk of on-board fires.
In particular, special attention has been paid to the choice of the materials used and to the accuracy of the construction and of installations.
The prevention of on-board fires, however, requires periodic maintenance of on-board systems and, above all, proper behaviour of on-board personnel.
In most cases, on-board fires are caused by sloppy maintenance, failure to carry out checks or poor sensitivity towards the need to try and remove any direct or indirect potential cause of on-board fires.
The possibility of successfully fighting a fire derives from the capability of preventing it, so as to avoid the conditions that help its outbreak, and from the promptness of the fire-fighting action.
Once the fire has been extinguished, it is important to identify the cause that triggered it (if this has not already been done previously) and, if possible, to eliminate it, or at least to take proper corrective actions.

Fire-fighting protection of the yacht is made up as follows:
- Engine room fixed HFC 227 gas fire-fighting system **(1)**;
- Technical room fixed HFC 227 gas fire-fighting system **(2)**;
- High temperature sensors in engine room and technical room;
- Portable dry-chemical extinguishers (n°2);
- Safety plates.

NOTE
The equipment described above must only be used for its envisaged purpose.
No other use is allowed under current rules.

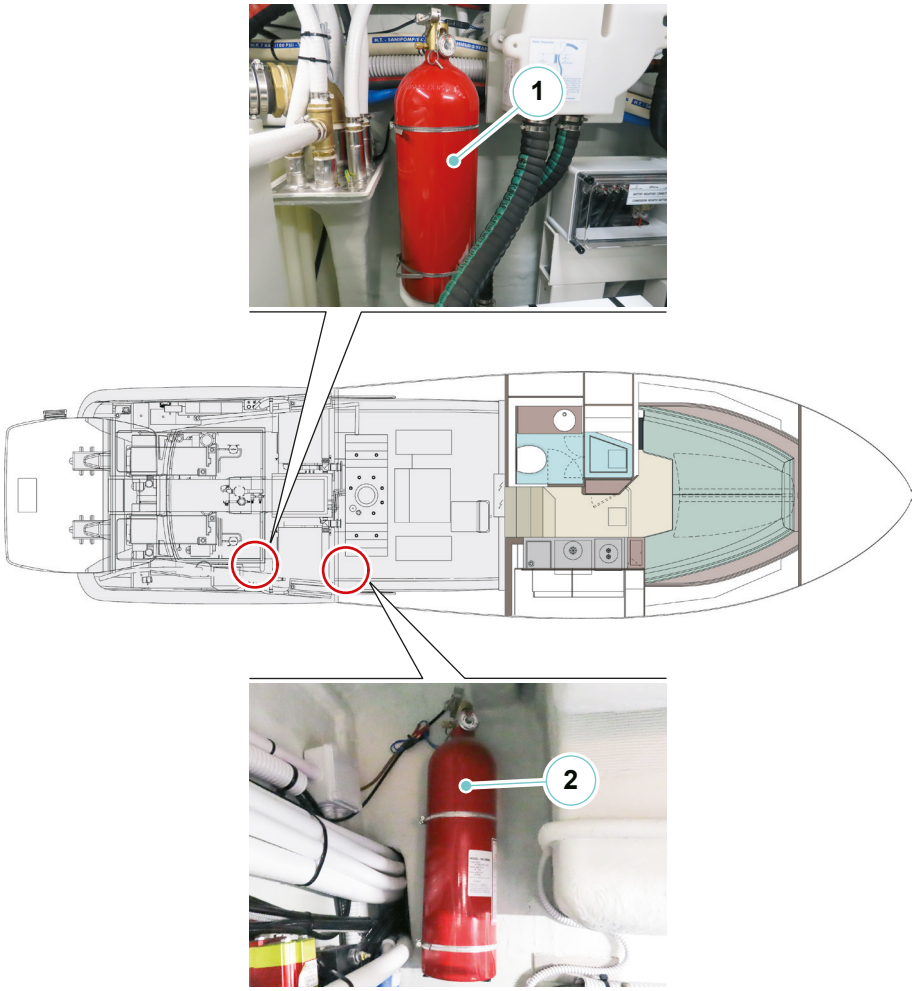

DANGER

Do not store flammable materials such as gas cylinders, fuel containers, spray cans, etc.. in the engine room or near heat sources.
These objects must be stored in ventilated rooms and, if possible, on the outside.

2.8.1 Automatic fire-fighting system (engine room and technical room)

The yacht is equipped with two fix fire fighting systems, for protecting the engine room and the technical room, independent and complying with regulations' provisions.
Each fire fighting system is composed of an automatics HFC 227 extinguisher, located inside the room. The HFC 227 fire fighting system installed on board has been designed to complete the discharge in a few seconds from the activation. In this way it is possible to reduce the time in which the fire can develop and expand, thus causing damages.
Delivered, the HFC 227 reaches all areas of the protected room (engine room and/or utility room), does not damage the most delicate equipment and does not leave residuals. It allows avoiding also the costs inherent to cleaning and operation restoration, therefore it allows resuming immediately the activities on-board.
The discharge is automatically activated by means of a sprinkler, installed on the bottle and filled with liquid that, when the room's temperature increases, expands and breaks the sprinkler itself, causing system activation.

DANGER

The extinguisher cylinders are provided with a safety pin. Make sure that such pin has effectively removed. Otherwise, in case of a fire, the extinguisher will be locked, preventing activation of the discharge, with subsequent serious damages to the yacht, and even its sinking.

The automatic fire extinguishing system HFC 227 is managed by an electronic control unit (SHUT DOWN). In case of fire in the engine room or the technical room, the time when the discharge the extinguisher is activated, the control unit stops the propulsion engine, the generator and the engine room extractors and the technical room extractor; take anyway on the bridge and put the keys of the engines ignition in OFF.

DANGER

The automatic fire fighting system that protects the engine room and the system room may not start under particular fire conditions and, therefore, IT IS ALWAYS COMPULSORY TO MANUALLY OPERATE THE FIRE FIGHTING CONTROL TIE RODS (see procedure shown hereinafter).

CAUTION

If a fire is detected, it is necessary to manually operate the system, without waiting for the automatic activation, in order to minimise the damage.

On the main deck, the starboard side, opposite to the console is the panel that indicates the state of charge of the engine room fire extinguishers **(2).**

In addition, there is the control panel **(1)**, equipped with optical and acoustic alarm, manages and monitors the sprinkler system of the engine room:

- **GREEN light**
  Indicates that the fire extinguisher is charged.
- **RED light**
  Indicates that the fire extinguishers is not charged.
- **SILENCE button**
  It turns off the acoustic signal which indicates that the system is operating and that the extinguisher is releasing gas.
- **DIMMER**
  It varies the brightness of the control lights of the CHARGE/ OVERRIDE panel.
- **OVERRIDE button**
  - When this button is pressed, the control unit which, in case of extinguisher discharge, stops the engines, generators and electric extractors, is cut OFF.
  - In OVERRIDE position the control unit is disabled.

DANGER

In case of fire, use the “OVERRIDE” to restart the engines, only in case of collision risk or during navigation in narrow waters.

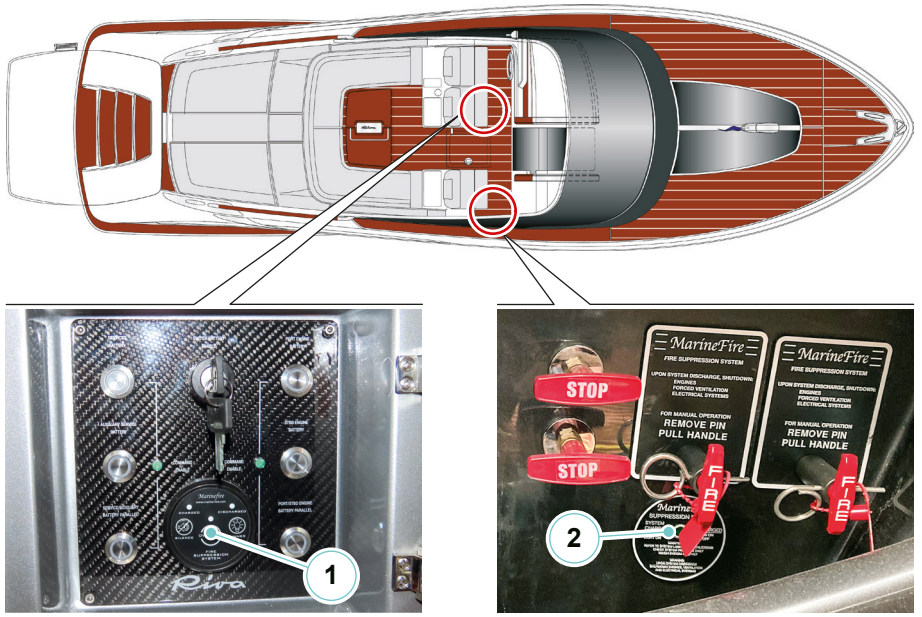

Automatic fire-fighting system diagram

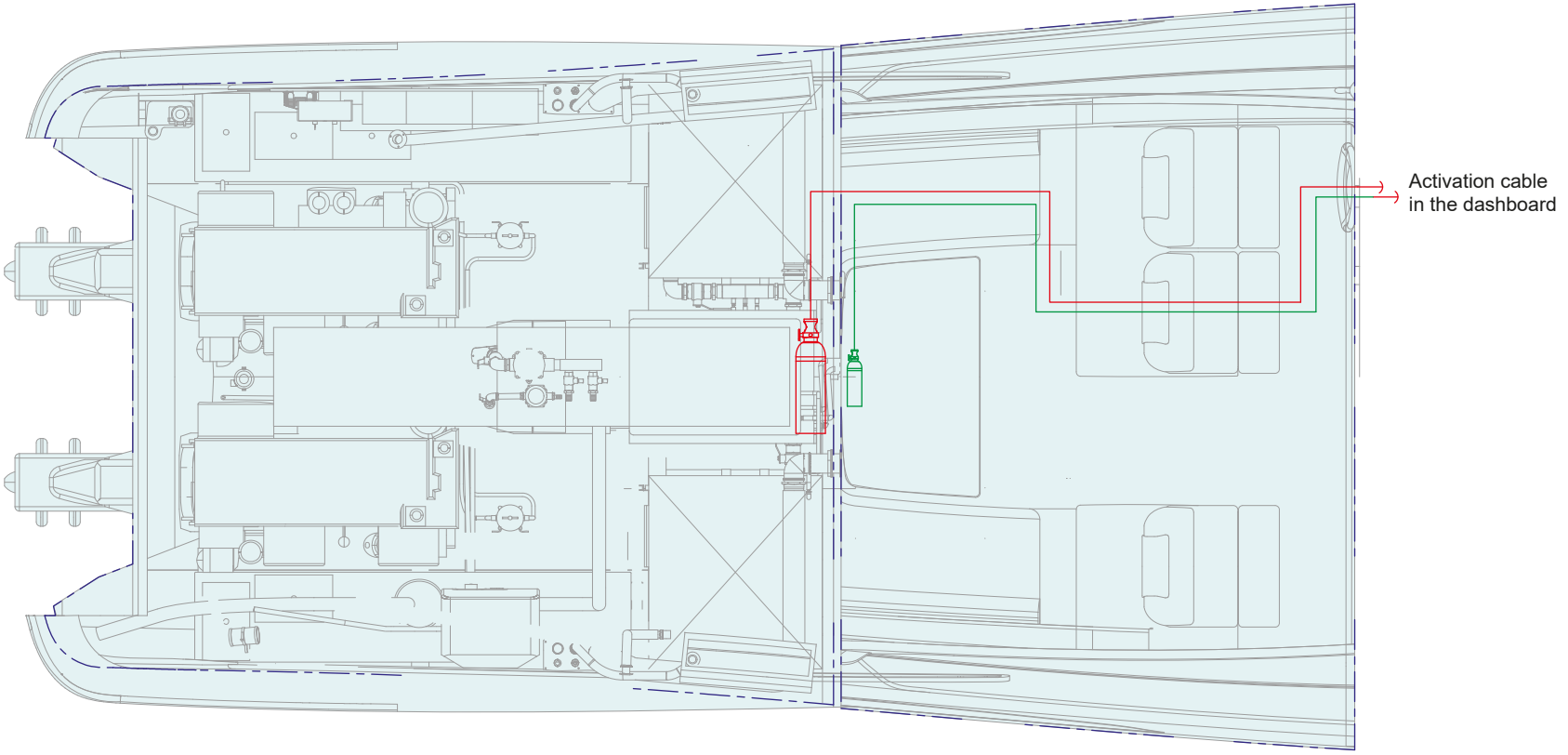

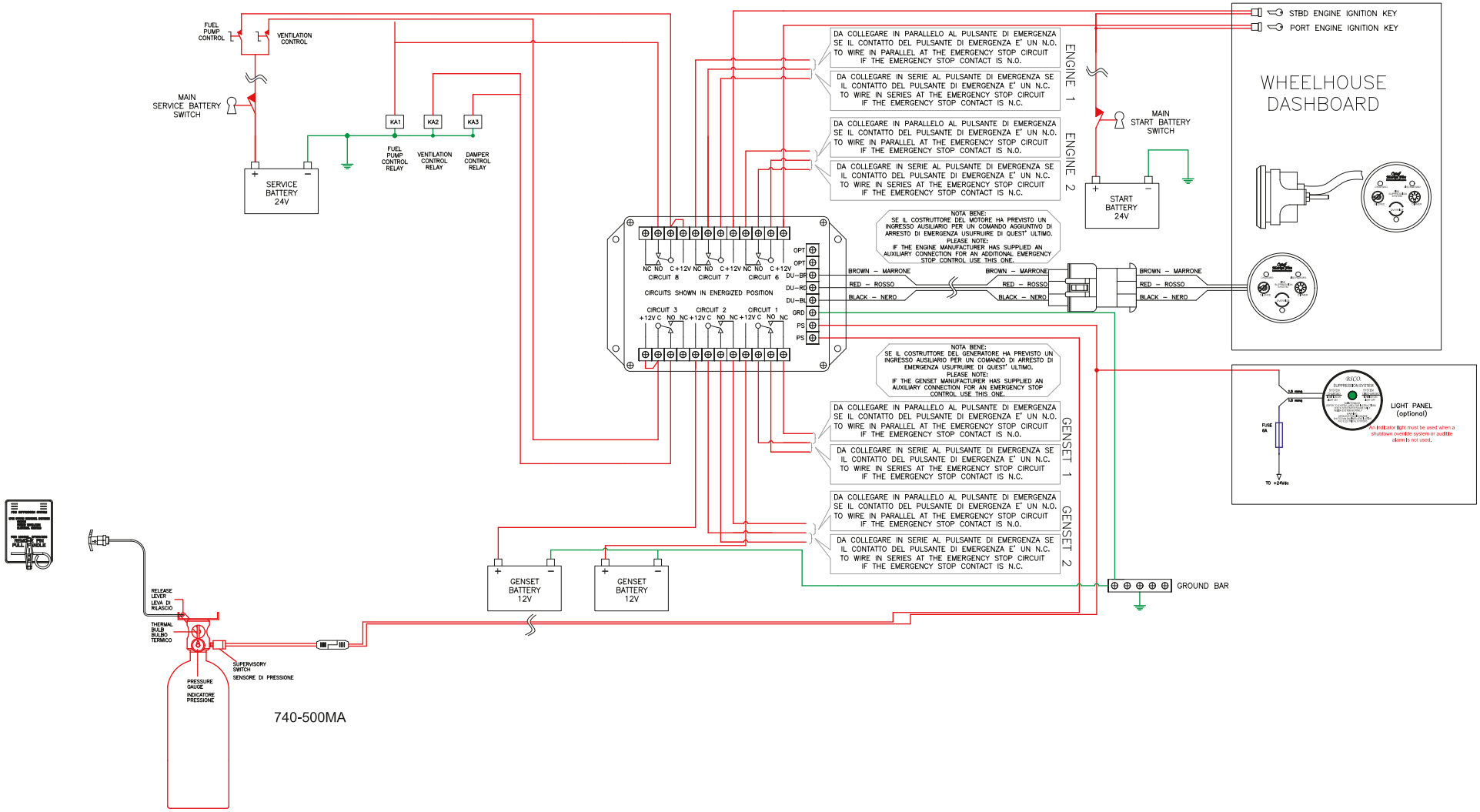
FUEL PUMP CONTROL
VENTILATION CONTROL
MAIN SERVICE BATTERY SWITCH
KA1
KA2
KA3
FUEL PUMP CONTROL RELAY
VENTILATION CONTROL RELAY
DAMPER CONTROL RELAY
SERVICE BATTERY 24V
DA COLLEGARE IN PARALLELO AL PULSANTE DI EMERGENZA SE IL CONTATTO DEL PULSANTE DI EMERGENZA E' UN N.O. TO WIRE IN PARALLEL AT THE EMERGENCY STOP CIRCUIT IF THE EMERGENCY STOP CONTACT IS N.O.
DA COLLEGARE IN SERIE AL PULSANTE DI EMERGENZA SE IL CONTATTO DEL PULSANTE DI EMERGENZA E' UN N.C. TO WIRE IN SERIES AT THE EMERGENCY STOP CIRCUIT IF THE EMERGENCY STOP CONTACT IS N.C.
ENGINE 1
ENGINE 2
GENSET 1
GENSET 2
NOTA BENE: SE IL COSTRUTTORE DEL MOTORE HA PREVISTO UN INGRESSO AUSILIARIO PER UN COMANDO AGGIUNTIVO DI ARRESTO DI EMERGENZA USUFRUIRE DI QUEST' ULTIMO.
PLEASE NOTE: IF THE ENGINE MANUFACTURER HAS SUPPLIED AN AUXILIARY CONNECTION FOR AN ADDITIONAL EMERGENCY STOP CONTROL USE THIS ONE.
NOTA BENE: SE IL COSTRUTTORE DEL GENERATORE HA PREVISTO UN INGRESSO AUSILIARIO PER UN COMANDO DI ARRESTO DI EMERGENZA USUFRUIRE DI QUEST' ULTIMO.
PLEASE NOTE: IF THE GENSET MANUFACTURER HAS SUPPLIED AN AUXILIARY CONNECTION FOR AN EMERGENCY STOP CONTROL USE THIS ONE.
CIRCUIT 8
CIRCUIT 7
CIRCUIT 6
CIRCUIT 3
CIRCUIT 2
CIRCUIT 1
CIRCUITS SHOWN IN ENERGIZED POSITION
OPT
DU-BR
DU-RD
DU-BL
GRD
PS
BROWN – MARRONE
RED – ROSSO
BLACK – NERO
MAIN START BATTERY SWITCH
START BATTERY 24V
STBD ENGINE IGNITION KEY
PORT ENGINE IGNITION KEY
WHEELHOUSE DASHBOARD
LIGHT PANEL (optional)
An indicator light must be used when a shutdown override system or audible alarm is not used.
FUSE 6A
TO +24Vdc
GENSET BATTERY 12V
GENSET BATTERY 12V
GROUND BAR
RELEASE LEVER
LEVA DI RILASCIO
THERMAL BULB
BULBO TERMICO
SUPERVISORY SWITCH
SENSORE DI PRESSIONE
PRESSURE GAUGE
INDICATORE PRESSIONE
740-500MA

2.8.2 Manual fire-fighting system

The automatic fire fighting system may not start under particular fire conditions; therefore, it is necessary to operate the safety tie rods in order to manually activate the fire fighting systems. The tie rods for fire fighting system manual activation of engine room and technical room are located on the starboard side, opposite to the wheelhouse. Operating the handle of the tie rod of the room involved in the fire, by means of a sheathed steel cable, it is possible to activate the relevant bottle's discharge, if the discharge has not yet been activated automatically, and simultaneously the SHUT DOWN system stops the fuel supply (engine room) and stops the air extractors (engine room and technical room).

The fire fighting control tie rod carries out the following functions:

- It stops the propulsion engines.
- It stops the air extractors.
- It stops the electrical system.
- It activates the HFC 227 fire fighting system.

DANGER

Each fire extinguishing tie rod is provided with a safety pin, that must always be inserted in order to avoid accidental discharges of the HFC 227 fire extinguisher.
The safety pin, when inserted, prevents discharge activation by means of the tie rod. The safety pin must be removed only when you intend to operate the extinguisher discharge tie rod.



1. Fuel interception tie rods
2. Fire fighting activation tie rods
3. Status panel charging of fire extinguishers

In case of fire in the engine room, carry out the following operations as soon as possible:

- Stopping the propulsion engines through the special engines keys, turn off the generator and engine room extractors acting directly on the electrical panel.
- Disconnect the battery breakers and all AC input magneto-thermal switches, in order to avoid feeding fires and short-circuits.
- Reach the fire fighting control tie rod.
- After having removed the tie rod's safety pin, operate the handle pulling it towards yourself, in order to:
  - Close the main engines and generator fuel supply circuits;
  - Stop the air extractors;
  - Activate the engine room HFC 227 extinguisher discharge.
- The system may have already been activated by the automatic system, however it is advisable to operate the tie rods in any case.
- If the fire breaks out while the yacht is underway, carry out the "MAY DAY" distress call; if the fire breaks out while moored in the harbour, alert the Harbour Authorities and the surrounding yachts, and evacuate all non-necessary personnel.

In case of fire in the utility room, carry out the following operations as soon as possible:

- Stop the utility room's air extractor.
- Disconnect the battery breakers and all AC input magneto-thermal switches, in order to avoid feeding fires and short-circuits.
- Reach the fire fighting control tie rod.
- After having removed the tie rod's safety pin, operate the handle pulling it towards yourself, in order to:
  - Activate the technical's room HFC 227 extinguisher discharge.
- The system may have already been activated by the automatic system, however it is advisable to operate the tie rod in any case.
- If the fire breaks out while the yacht is underway, carry out the "MAY DAY" distress call; if the fire breaks out while moored in the harbour, alert the Harbour Authorities and the surrounding yachts, and evacuate all non-necessary personnel.



DANGER

Before activating the engine room fire fighting system make sure that no people is inside the room.
Do not open the engine room or utility room access hatch until you are absolutely sure that the fire has been extinguished.
After the discharge, wait for a sufficient lapse of time and verify that the fire is out. Ventilate the room before entering it for inspecting it thoroughly.



DANGER

Keep the fire-fighting control rod system efficient by having the periodic maintenance and functional checks carried out by skilled personnel.



DANGER

Pay the utmost attention when touching equipment in general.
It may still be very hot and can cause burns.

2.8.3 Essential restoring for resuming navigation

If the fire-fighting system of the engine room has been activated and a fire has been extinguished, it is necessary to restore the essential conditions for navigation, in order to autonomously reach the nearest harbour in which to carry out the due checks.
To resume navigation, the ventilation system of the engine room and the fuel system of the propulsion engines must be brought back to normal working condition.
In order to allow starting the propulsion engines and the generator and re-starting the air extractors, set the fire fighting control panel switch to OVER-RIDE.



DANGER

Restoring the fire-fighting system with the aim of resuming navigation is an advisable operation only when the fire has not caused damage to the structure or to critical systems of the yacht.
In such a case, or should you have any doubt, it is essential to wait for rescue without resuming navigation.



DANGER

The operations for restoring the fire fighting system must be carried out directly from the engine room; therefore, before carrying out any operation, carefully read the safety instructions reported in the this manual.

If the fire has only involved the system room, after you have made sure that the fire has been extinguished, restore the room ventilation by means of its extractor.

CAUTION

Remember that, following the restoration of the fire-fighting system, the fire extinguisher is discharged and it shall not be operational in case of a new fire.
Therefore, once returned to the harbour, you must have the fire extinguisher immediately recharged by authorized personnel.

CAUTION

In case of fire, ALWAYS turn the engine keys to OFF.

2.8.4 High temperature sensors in the engine room

High temperature detection system installed on the yacht is an essential surveillance component for preventing any fires that may occur during operation.
The system consists of two temperature detectors located in the engine room and in the technical room.
In case of high temperature in the engine room or technical room (above 57°C [135°F]), the temperature detectors activate the alarm siren and the light (**1**) located on the helm station.
The temperature detection system is directly connected to the batteries, allowing its operation also while the yacht is left unattended and when the battery breakers are OFF.



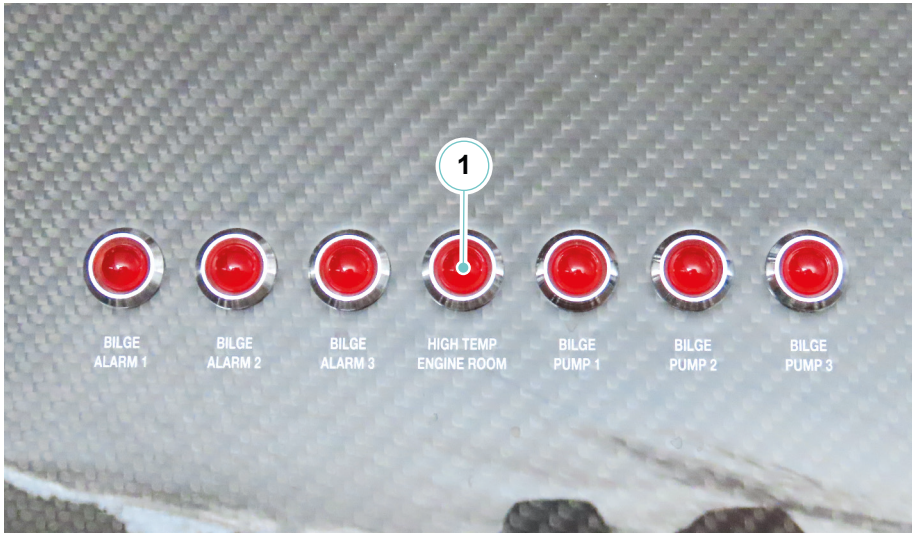

2.8.5 Maintenance of the fire-fighting system

ITEM	OPERATION	NOTES and WARNINGS
HFC 227 gas fire extinguisher	Checks and tests	Check the charge status by means of the pressure gauge installed on the cylinder. The charge status can also be checked also by measuring the cylinder weight. The extinguisher is properly charged when the pressure and weight values comply with the specification reported on the extinguisher tag. Before installing, weigh the extinguisher (bracket excluded) and record the date and weight on the special tag. Check the weight (bracket excluded) every six months: if the weight has decreased with respect to the previous checks, recharge or replace the extinguisher. Have the preservation status of the container (cylinder) checked by qualified technicians at least at the beginning of each season.



DANGER

Accidental discharge of the fire extinguisher during handling or installation may cause serious injury. Insert the safety pin on the valve again until the installation or the check has been completed.
Protect your eyes during maintenance and installation operations.



DANGER

During maintenance operations, pay attention not to unintentionally break the flask, because, even if the safety pin is inserted, if the flask breaks, the fire-fighting system activates.



DANGER

Once maintenance and installation have been completed, remove the safety pin from the extinguisher valve.



DANGER

Before entering the engine room, it is necessary to ventilate the rooms properly, so as to avoid risks of burns and poisoning, due to high temperatures and to noxious gases suspended in the air.

2.9 MANDATORY SAFETY EQUIPMENT

In order to ensure the maintenance of the intrinsic safety conditions of the yacht, the Owner must keep the yacht in good operational conditions (as regards to the hull, and the propulsion, electrical and fire-fighting systems), and also to provide for the replacement of any system, rescue and safety equipment showing signs of wear or deficiencies capable of impairing their efficiency.
In addition to the equipment provided by RIVA, the Owner is responsible for providing the yacht with any further system and safety/marine equipment required by the rules in force in the nation where the yacht is used, according to weather and sea conditions and to the distance from safe harbours along the intended course.



DANGER

Rescue equipment must be arranged so as that when it is launched there are no obstacles to free floating and must be equipped with proper fitting allowing for quick release from the yacht when at sea.
The Owner is responsible for equipping the yacht with some of the equipment listed.

NOTE

Refer to the local Port Authorities for instructions and changes of the Safety Rules in force in the country where you are.

2.9.1 Minimum rescue facilities and safety equipment to be kept on board of yachts and leisure crafts according to the distance from the coast or shore

The shipyard does not supply all the equipment mentioned in the following table. It is the responsibility of the owner and captain to fit out the yacht with the minimum safety equipment. TYPE OF NAVIGATION - (The x indicates that the item is compulsory - the adjacent number indicates the quantity).

A) Safety equipment for pleasure crafts (with or without EC marking)								
	without any limit	within 50 miles	within 12 miles	within 6 miles	within 3 miles	within 1 mile	within 300 metres	rivers, streams and waterways
Self-inflatable life raft (for all persons on board)	x	x						
Floating devices (for all persons on board)			x					
Life buoys (one for each person on board)	x	x	x	x	x	x		x
Life buoy with line	x1	x1	x1	x1	x1	x1		x1
Light buoy	x1	x1	x1	x1				
Smoke buoy	x2	x2	x2	x2	x1			
Compass and deviation charts	x	x	x					
Clock	x	x						
Barometer	x	x						
Binocular	x	x						
Nautical charts of navigation area	x	x						
Plotting tools	x	x						
Red light hand fires	x4	x3	x2	x2	x2			
Red signal rockets with parachute	x4	x3	x2	x2				
First aid kit	x	x						
Prescribed lights	x	x	x	x	x			
Acoustic signalling equipment	x	x	x	x	x			
Position indicating radio beacon (Loran, Gps)	x	x						
VHF equipment	x	x	x					
Radar reflector	x	x						
E.P.I.R.B. (emergency position indicating radio beacon)	x							
B) Further safety equipment for crafts without EC mark								
Pump or other draining equipment	x	x	x	x	x	x		
Fire-fighting equipment - fire extinguishers: as shown in the attached Table 1 dot B annex 5 according to Ministerial Decree 29/07/2008 No. 146	x	x	x	x	x	x		

2.9.2 First aid kit

The first aid box must be kept on board of class A crafts qualified for navigation “with no limits from the coast”.
The container must be rigid, floating and with watertight closure.

ENVIRONMENT
It is forbidden to discard medicines at sea, even if expired. Treat medicines as special waste and therefore in accordance with the disposal procedures envisaged by the Country in which you are staying/ transiting.

This is the minimum quantity of the medicines recommended for the Owner to keep on board:

- 1 disinfectant bottle for outer use 250 cc;
- 1 dark glass bottle of ammonia;
- 5 packs of bandages of various sizes;
- 1 pack of plasters;
- 1 pack of medicated plasters;
- 1 250 g pack of cotton wool;
- 1 pair of scissors;
- 1 pack of compressed hydrophilic gauze of various sizes;
- 1 pack of compressed Vaseline gauze of various sizes;
- 1 tourniquet;
- 1 pack of splints for fractures.

DANGER
Remember to check the expiry date and the availability of the products contained in the first aid kit at regular intervals.
Remember to store those medicines, which require to be kept in cool places. Inform all passengers of this in the fridge.
Keep the first aid box in a place free from moisture and away from heat sources, easily accessible, quickly reachable in case of need and far from the reach of children.

2.10 USE OF THE SAFETY EQUIPMENT

2.10.1 Self-inflatable life raft

The self-inflatable raft must be used only in case of real emergency implying the abandonment of the yacht.
The yacht must in fact be abandoned in case of serious sinking hazard, or in case of fire out of control.
In all other cases it is necessary a careful evaluation, because to leave the own yacht, even though on a self-inflatable life raft, could mean a more difficult identification on the side of the rescue team.
As a matter of fact, the search for the shipwrecked will start exactly from the last known position of the yacht.



CAUTION

The validity of self-inflatable life rafts is limited: check its expiry date on the certificate provided by the Manufacturer.
Self-inflatable life rafts can be overhauled at authorized Centres that shall extend the validity of the certificate. Sanctions are provided if this rule is not respected.

In case the use of self-inflatable life rafts becomes necessary, perform the following operations:

1. Stop all yacht engines.
2. Perform the distress call by means of VHF device.
3. Wear life jackets.
4. Remove the cushions (seat and backrest) of the cockpit's port side sofa, and open the hatch.
5. Uncoil the life line of each raft by 3 to 4 m (9,8 to 13,1 ft); secure it tightly to a fixed point of the yacht and launch the self-inflatable life raft into the sea on the lee side.
6. Fully uncoil the line and give a strong pull: the raft shall inflate automatically.
7. Proceed with the boarding of all personnel on the raft, directly from the yacht.
8. If the distress call has already been performed and you have received an answer, prepare to a relatively short wait; therefore, evaluate whether to cut the life line or not. If you did not have the time to perform the distress call or you did not receive an answer, prepare for a long wait; in such a case plan for survival, trying to board on the raft, beyond the equipment included in the kit, also the following items: floating smoke signals and rockets, a knife, drink water and energetic food that does not stimulate thirst. Before boarding the raft, wear all possible garments, except for the shoes that could injure other shipwrecked persons or damage the life raft.
9. If some passengers have fallen overboard, help them board the raft; use the life buoy equipped with the line, if necessary.

10. Make sure that all the personnel is on board and assess if it is better to cut the connecting line or not.
11. Extract the knife supplied with the raft from its sheath and use it to cut the connecting line that secures the self-inflating raft to the yacht.
12. Rapidly row away from the yacht using the oars provided with the raft.
13. Close the protective sheet in case of bad weather; this is useful to keep inside the warmth generated by the occupants and to keep outside the cold and humidity during night hours or in case of bad weather; only keep a small opening to provide ventilation.

DANGER

A life raft cannot reach the shore with its own means, unless it is driven by favourable winds. Oars are only useful for small manoeuvres.

DANGER

All persons on board must know the location of self-inflatable rafts storage and the correct use procedures.

DANGER

If the life raft does not open after the first pull, repeat the operation two or three times. If it still does not open, enter in the water and pull the emergency line strongly while keeping a hand on the container. If it still does not open, use a blade to force the container open and activate the opening system by directly pulling the line.
If the raft opens upside down, enter in the water and turn it over by pulling the appropriate line.

Always wear individual life jackets, especially with rough sea.
If the raft deflates, inflate it again from time to time using the proper inflating device provided with the raft.
If the raft is pierced, use the sealer contained in the repair kit, so as to prevent air escape.
It is also possible to carry out small repairs using the glue provided with the kit.
To that end, clean the ruptured part and the repair patch; spread both of them with the glue provided in the kit; apply the patch for 30 seconds pushing outward from the center to remove air bubbles; keep pushing for a while; inflate approximately one hour later.

DANGER

With very high waves and strong wind there is the risk that the raft may overturn: shift the weight of persons on board towards the side tending to raise. If the life raft in spite of all does capsize, roll it over and return on-board.

2.10.2 Vhf-radiotelephone

The VHF device allows communication on channels dedicated to Port Authority, rescue and radio stations.
To ask for rescue it is necessary to use the suitable VHF/FM channel: after each hour, as a legal rule, follow 6 minutes of silence, from minute 0 to minute 3 and from minute 30 to minute 33, so as to enable a better listening of the distress communications.
If the VHF is used, the distress call must be preceded and ended by the wording “**MAYDAY, MAYDAY, MAYDAY**”.It is therefore necessary to give your position, the yacht’s name, the kind of damage and the kind of help you require (medical, mechanical, etc..).

CAUTION
Perform the “MAYDAY” rescue call, only in case of real need.

If, listening to the distress channel, a distress call that has not yet received an answer is picked up, it is possible to send a “**MAYDAY RELAY, MAYDAY RELAY, MAYDAY RELAY**”, forwarding the communication of the person who requested rescue.

It can in fact happen that the distress call, carried out on open sea or by means of a poorly powered sender, is not received by the rescue team.
Acting as a spokesman, you can help the message reach its destination successfully.



CAUTION

Perform the call "**MAYDAY RELAY**" only if there is a reasonable certainty that the message has not been collected by the rescue team so as not to engage the distress channel uselessly.

The use of the standard procedure avoids making confusion and shortens the transmission time. In case of danger, use only the phonetic alphabet recommended.
The VHF device is a vital and important communication line; please remember some fundamental rules:

- No transmission should be performed without reason;
- Listen before transmission so as to avoid interference with other senders;
- For distress calls, use and hold the best possible wireless contact;
- Always use your call identification or the name of the yacht in order to make yourself identifiable. The use of names or family names is not allowed;
- Send short and clear messages;
- For distress calls it is important to give the yacht's position, the kind of danger, the time passed in water, the kind of yacht and the number of persons involved;
- For other calls, once the contact with the person called has been established, transfer the call on an operation channel;
- Cut out transmission if required by a coastal station;
- Retune the radio when the call is ended.

MANUAL DISTRESS CALL:

- Select the distress channel by pressing key 16 or by scrolling the channels with the volume keys.
- Confirm the channel by pressing the OK button.
- Press the transmission key (PTT) on the radiotelephone and make the call.

MAYDAY - MAYDAY - MAYDAY THIS IS: repeat the yacht's name for 3 (three) times.
MAYDAY THIS IS: repeat the yacht's name.
AT POSITION: specify the position of the yacht.
SPECIFY THE DISTRESS CAUSE.

- Release the (PTT) transmission key.
- Wait for the reply for a few seconds.
- If you do not receive any reply, repeat the message at regular intervals.
- Until receiving a reply.

NOTE

For further information on use and maintenance, please refer to the manufacturer's manual.

2.10.3 Portable fire-extinguishers

In order to supply an easy, ready and quick fire-fighting system on board of your yacht, 1 kg (2,2 lb) portable fire extinguishers have been set at disposal, designed to be carried manually, and in compliance with the rules in force.
The fire extinguishers have been installed in visible and easily accessible places, and their position is indicated by proper plates applied by RIVA.
In case a fire breaks out, immediately reach a fire-fighting station where a portable fire extinguisher is located.
The use of a fire extinguisher requires a certain familiarity with it, but some theoretical-practical rules can facilitate its handling:

- Make sure that the safety pin (**1**) against accidental discharge, has been removed;
- Always direct the extinguisher towards the bottom of the flame;
- Do not stand but try to bow as far as possible;
- Do not hit the fire from above;
- Shift the fan-shaped jet slowly from one side to the other of the flame;
- Act immediately before the temperature becomes too high;
- Always stay windward;
- If the material burnt is wood, paper or tissue, after the fire has been extinguished, pour on water to prevent any further spread of flames;
- Always act dressed;
- Head the yacht so that the fire is leeward;
- Persons not engaged with the fire fighting must gather windward from the fire area and if necessary, disembark on a rescue device (tender,
- Rubber dinghy, self-inflatable life raft), that must be linked to the yacht with a line, in order also to embark the persons engaged with the fire fighting;
- If the fire is big the operators must abundantly wet their clothing;
- The engines must be shut-OFF immediately and the fuel must be cut-OFF;
- Isolated objects in flames must immediately be thrown overboard;
- All openings that can allow air to penetrate through the flames must be closed;
- After using the extinguisher to fight fire in closed spaces, ventilate the space carefully, prior to entry, and remove powder deposits.

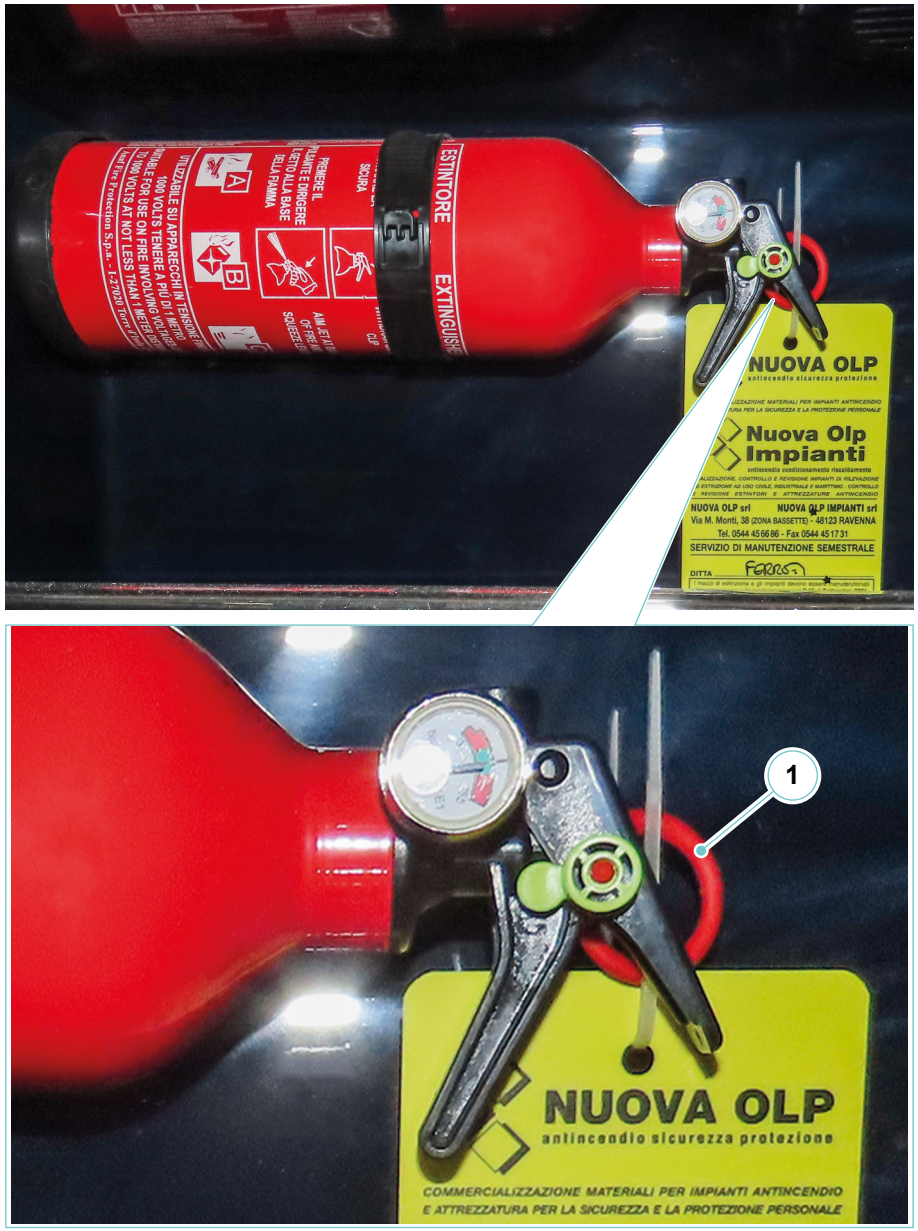

DANGER

The person in charge of the yacht must make sure that all passengers know the locations and how to operate the fire extinguishers on-board correctly.

CAUTION

We advise to regularly checking the charge status (visual check of pressure gauge and weight) and also its overhauling, according to the rules in force in the country whose flag the yacht flies.

DANGER

Pay particular attention during the cleaning and cooling operation because the components are still hot and can generate burns or scalds.

The arrangement of the fire extinguishers is indicated in the previous “Safety equipment diagram”.

CAUTION

All fire extinguishers should be checked at least every 12 months by qualified staff and in any case after each navigation.
Even after a partial use, the extinguishers should be recharged by authorized personnel.

The extinguisher should be kept in a good condition and the charge indicator, located on the pressure gauge, must always be positioned in the green field.
Keep the extinguishers in a vertical position.
After the use of a dry-chemical fire extinguisher, carefully clean the parts that came in contact with the powder because it is highly corrosive.

2.10.4 Portable fire-extinguishers maintenance

Component	Maintenance	Notes and precautions
Portable fire extinguishers	Checks and tests	Check the state of charge of each fire extinguisher at least once every 12 months, and in any case before each journey at sea, by means of the installed pressure gauge. The fire extinguisher is correctly charged when the weight value is as stated on the fire extinguisher's tag, and the charge indicator on the pressure gauge is in the green area. If they are found to be discharged or insufficiently charged, or at least every 10 years, have qualified technicians: • Check the condition of the container (cylinder); • Refill the extinguishing medium; • Carry out a hydrostatic test. Have fire extinguishers recharged even after partial use. **MAINTENANCE** At least every 12 months, and, in any case, before each journey to sea, check the state of charge of the fire extinguisher. At least every 10 years, and in any case before each journey to sea, check the external state of the fire extinguisher. At least every 6 months check the fastening of the fire extinguisher.

2.10.5 Life buoy

The life buoy is classified and resistant to sea water, to hydrocarbons, and to low temperatures; it is orange in order to be easily seen in water.
The life buoy is equipped with a lifeline of 30 m (98,4 ft) and with an automatic light buoy.
The life line is not twistable and it is orange in order to be easily seen in water.



CAUTION

Before going underway, move the life buoy from the crew cabin to an easily accessible place.
All passengers must know the stowing place of life buoy.
The Captain must make sure that all passengers know how to use the life buoy:

- How and where to throw it;
- How to give assistance in case of man overboard.

2.10.6 Individual life jacket

The life jacket is an individual safety device, consisting of a single chamber inflatable jacket, yellow-coloured to be easily visible in water and resistant to the effects of sea water, hydrocarbons and low temperatures.



This type of life jacket preserves the safety and floatability requirements required by EU regulations.
These life jackets must be worn correctly and firmly tied by means of strong laces.
The individual life jacket is contained in a belt bag container.
The individual life jacket is equipped with a whistle, fastened to the jacket by means of a safety cord.
The whistle is particularly useful to indicate your position when weather conditions do not allow sufficient visibility (bad weather, fog, etc..).
It is important to learn, particularly for children, how float in water with the life jacket.

To avoid energy waste it is necessary to float by keeping legs and arms folded as far as possible and tight to the body to maintain the heat.
The individual life jacket has to be worn under following circumstances:

- When you navigate through sandbanks or tide reefs;
- At first sign of bad weather;
- When visibility is limited;
- When you navigate with rough sea;
- When you navigate alone;
- At any time with children below 10 years of age.

CAUTION

The yacht must be equipped with a number of individual life jackets equal to the number of persons present on board.
All persons boarded must know the location of the life jackets, how to wear them, how to tie them properly to the body, and where the whistle is located.
We recommend reading the manual provided by the Manufacturer for correctly preparing and using the life jacket.



DANGER

If you are to choose a life jacket for a child, take care about for the correct size and that smaller children do not slip out of them once in water.
We recommend that all children wear an individual life jacket when they move on the yacht.

2.10.7 Signalling rockets

Leisure craft are obligated to carry 4 manual rockets with red light and 4 manual orange smoke signals as required.
Always verify the legislation of the Country in whose waters the yacht is going to navigate.

- The signalling rockets have a limited lifetime; it is therefore necessary to check their expiry date and eventually to replace them.
- The floating smoke signals, visible up to 4 km (2,5 mi), have to be used with the daylight, to indicate the correct position.
- The red light rockets, visible up to 10 km (6,2 mi), are designed for night use, but they can also be seen during the day.
- Before using the signalling rockets, always wait for the arrival of an aeroplane or to see persons on the shore or on other crafts.
- Store the signalling rockets away from flammable liquids and from other fuels.
- As the content of the signalling rockets absorbs the moisture, make sure to have them located in a dry and accessible place.
- All persons boarded must know the place of the signalling rockets and the method of use.
- Carefully follow the activation instruction for all signalling rockets.

DANGER
Keep the signalling rockets away from heat sources, flammable liquids or naked flames, and out of the reach of children.

DANGER
Once the signalling rocket has been lit, never direct it towards persons, there is a risk of burns and scalds.

WARNING
The signalling rockets have a limited lifetime, indicated on their containers. Once expired, contact the rockets suppliers which offer a disposal service. Do not light them unless necessary, because they can activate the Emergency Services.

2.11 USEFUL ITEMS TO HAVE ON BOARD

In addition to the standard safety and marine equipment, we recommend keeping on board a number of items (not included in the standard equipment), that can be useful when operating the yacht; most probably, these items will not be used frequently, but may be determining for navigation safety and continuity in case of trouble:
Standard equipment:
- 2 lines, Ø 18 mm (0,7 in), 10 m (33 ft) long;
- 2 lines, Ø 18 mm (0,7 in), 20 m (65 ft) long;
- 1 spare anchor 25 kg (55 lb) with line and chain;
- Yacht hook.

Suggested equipment to be kept on board:
For mooring and towing operations:
- 2 lines, Ø 25/30 mm (1/1,2 in), 25/30 m (82/98 ft) long;
- 2 lines, Ø 20 mm (0,8 in), 20/30 m (65,6/98,4 ft) long;
- 1 line, Ø 30 mm (1,2 in), 50 m (164 ft) long;
- 1 line, 5 mm (0,2 in), 100 m (328 ft) long;
- 1 spare anchor 50 kg (110,2 lb).

For the electric system:
- Complete set of lights for navigation lights;
- Spare for little spot lights;
- Spare for engine room lights;
- Fuses;
- Insulating tape.

For maintenance of on-board engine equipment:
- Funnels of various dimensions with rubber pipe;
- 30 kg (66 lb) of engine oil;
- 10 kg (22 lb) of gear box oil;
- 5 kg (11 lb) of hydraulic oil for the steering system;
- 2 kg (4,4 lb) of hydraulic oil for interceptor;
- 1 kg (2,2 lb) of hydraulic oil for thruster;
- Stainless steel pipe clamps of various dimensions;
- Working gloves;
- Rags;
- CRC spray;
- Vaseline spray;
- Propulsion engine spare part kit (suggested by the Manufacturer);
- Power generator spare parts kit (suggested by the Manufacturer).

NOTES:

3 - DESCRIPTION OF THE YACHT

3.1 MAIN DIMENSIONS AND CHARACTERISTIC DATA OF THE YACHT

3.1.1 Main dimensions

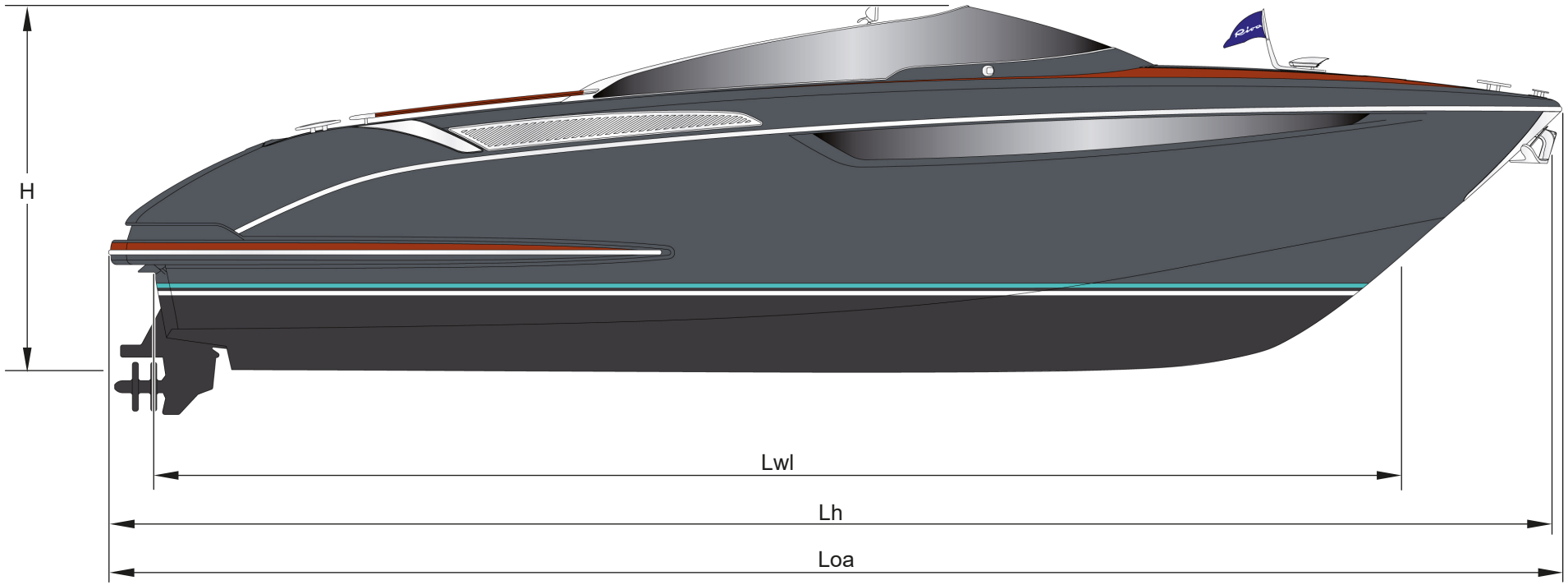

Overall length (Loa)	11,88 m	39 ft 0 in
Hull length (Lh)	11,72 m	38 ft 5 in
Waterline length (Yacht fully laden) (Lwl)	10,10 m	33 ft 2 in
Pulpit + platform connected to the hull	0,16 m	0 ft 6 in
Overall height from keel to windscreen (H)	3 m	9 ft 10 in

Depth under propellers (Yacht fully laden)	1,16 m	3 ft 10 in
Maximum width	3,50 m	11 ft 6 in
Displacement with yacht unladen and dry	9 ton	19842 lb
Displacement fully laden	11,5 ton	25294 lb

3.1.2 Data and features

- Bottom hull: variable geometry with 15° deadrise and supporting fins
- Construction material: fibreglass
- Engine: 2 x Volvo Penta D6-400 DPH 400 mhp (294 kW) at 3500 rpm
- Capacity of fuel tanks: 1000 litres - 264 gals
- Capacity of fresh water tank: 330 litres - 87 gals
- Capacity of black water tank: 38 litres - 10 gals

CAUTION

RIVA yachts are designed to obtain a correct transversal trim with full optional equipment, as well as spare propellers and shafts.
If the yacht is not provided with full optional and with spare propellers and shafts, some weights are inserted to correct the transversal trim.
The above-mentioned weights can be removed or displaced as soon as the yacht is provided with a new equipment.

CAUTION

Any change in the disposition of the masses aboard may significantly affect the stability, trim and performance of the craft.

NOTE

The technical specifications and the performances indicated are merely indicative, and do not constitute an offer with the value of a contract in any way, and are referred to standard models of the yachts built by the Shipyard in the European version.
The only technical indications or descriptions with contract value for the purchaser are those relevant to the specific yacht purchased and contained in the sale documents.

CAUTION

Bilge water should be kept to a minimum.
Stability is reduced by any weight added on top.
In the event of rough seas, doors, cabinets and doors must be closed to reduce the risk of flooding.
Breaking waves are a serious stability hazard.

3.2 GENERAL DESCRIPTION

RIVA, a long-time a leader in the high-end yacht sector of the shipbuilding industry, puts great effort in the study and design of the general arrangement, pursuing the maximum functionality and comfort, while retaining the exclusive aesthetic features that characterise the yachts by RIVA.
The yacht is divided into the following zones:

- Main deck
- Lower deck
- Engine room and technical room

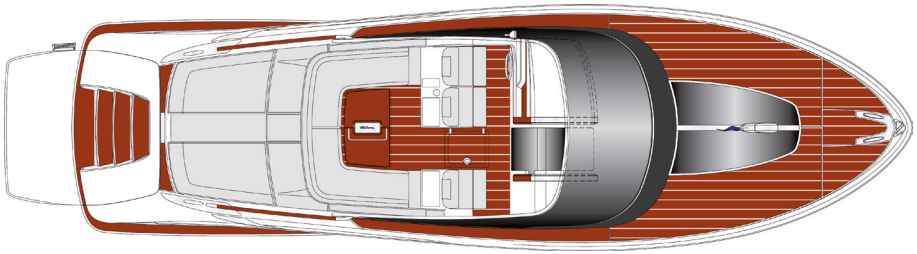

Main deck

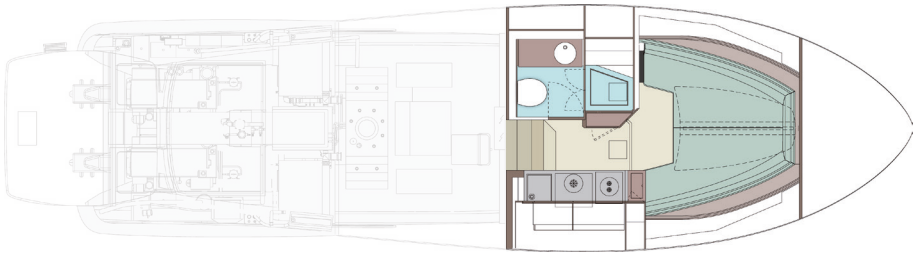

Lower deck

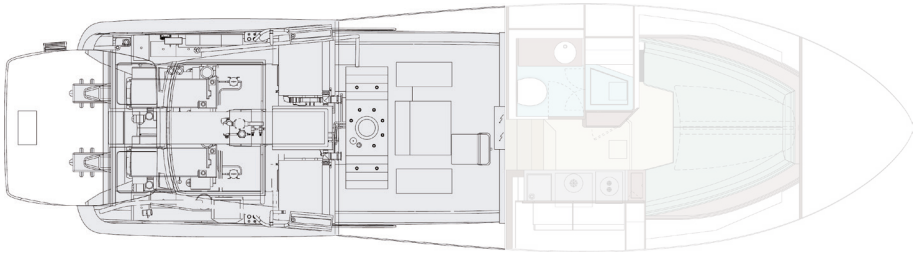

Engine room and technical room

3.3 MAIN DECK

The main deck consists of a large external area on which you can enjoy the luxury and comfort of your yacht in the open air.
The sofas in the cockpit and the bow and stern sun-bathing area are large and comfortable and equipped with high-quality accessories.
Besides the areas studied to ensure maximum comfort to the owner and his guests, the main deck is provided with a set of services and systems useful for navigation and for the mooring and anchoring phases.

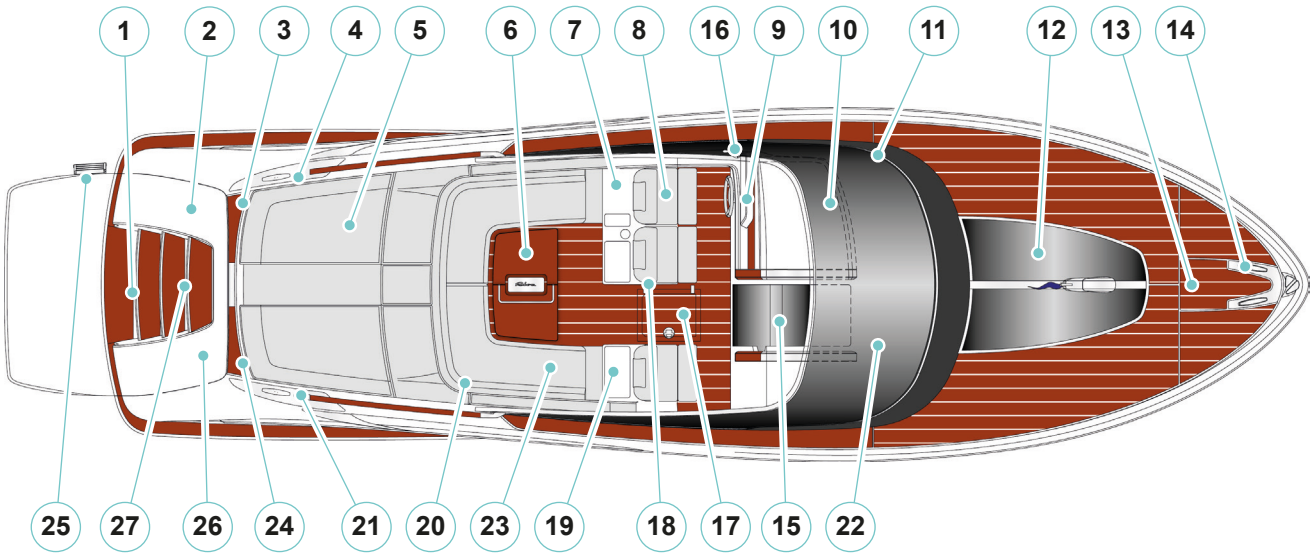

1. Black water discharge on shore (WASTE)
2. Port stern peak
3. Shore socket peak
4. Fresh water inlet (WATER)
5. Stern sun-deck / engine room access
6. Cockpit table
7. Bar cabinet
8. Captain seats
9. Helm station
10. Windscreen
11. VHF aerial
12. Owner's cabin skylight
13. Chain, anchor winch and fenders peak
14. Bow fairleads and cleats
15. Lower deck access sliding door
16. Searchlight
17. Technical room access hatch
18. Cockpit fridge
19. Starboard utility cabinet
20. Bimini seat cover
21. Fuel inlet (DIESEL)
22. Windscreen wiper
23. Cockpit sofa
24. Shower peak
25. Swim ladder
26. Starboard Peak for Seabob
27. Gangway (optional)



Main deck; bow view



Main deck; stern view

The shore power supply socket is located in the stern zone, on the port side.



The freshwater inlet is located on the aft of the port sun-deck.



The shower is located in the stern zone on the starboard side.

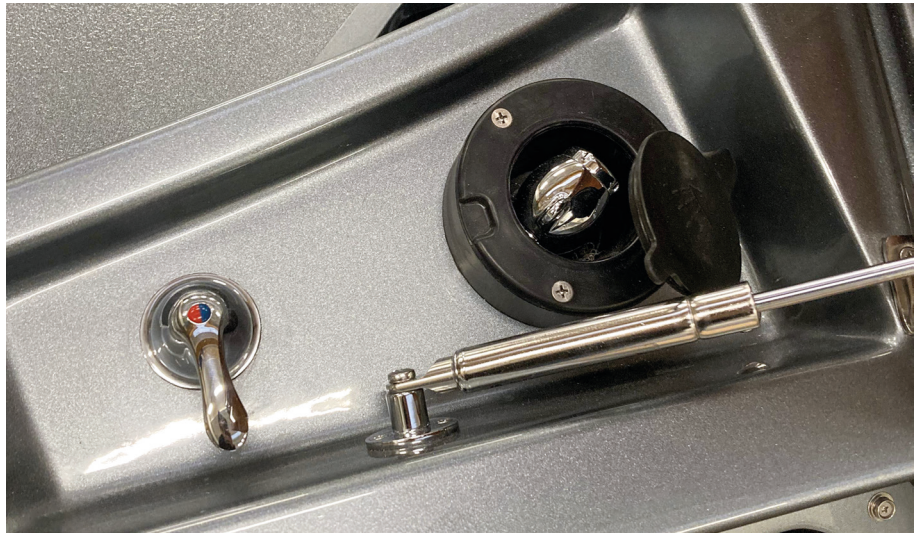

Inside the locker abaft the starboard sun-deck is the peak for the Seabob and its battery charger (optional).

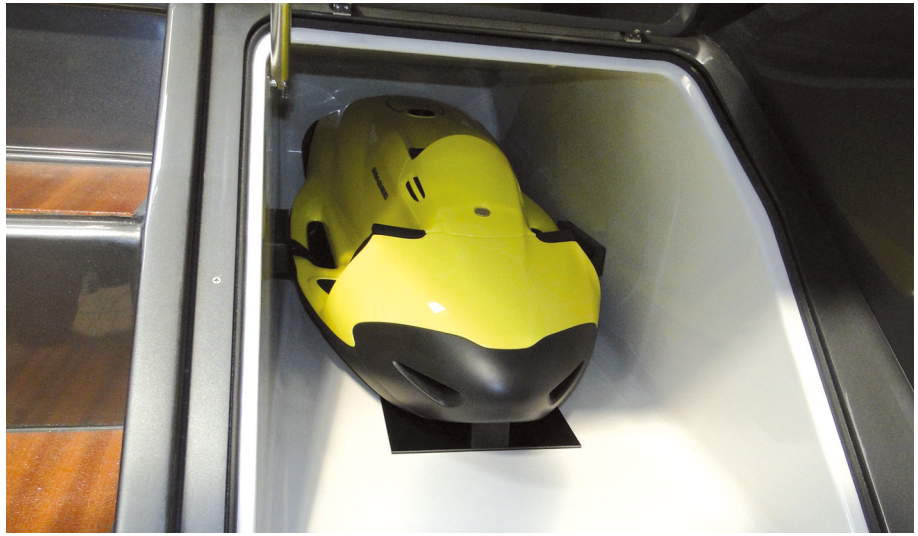

The swim ladder is located inside the seat in the stern platform.

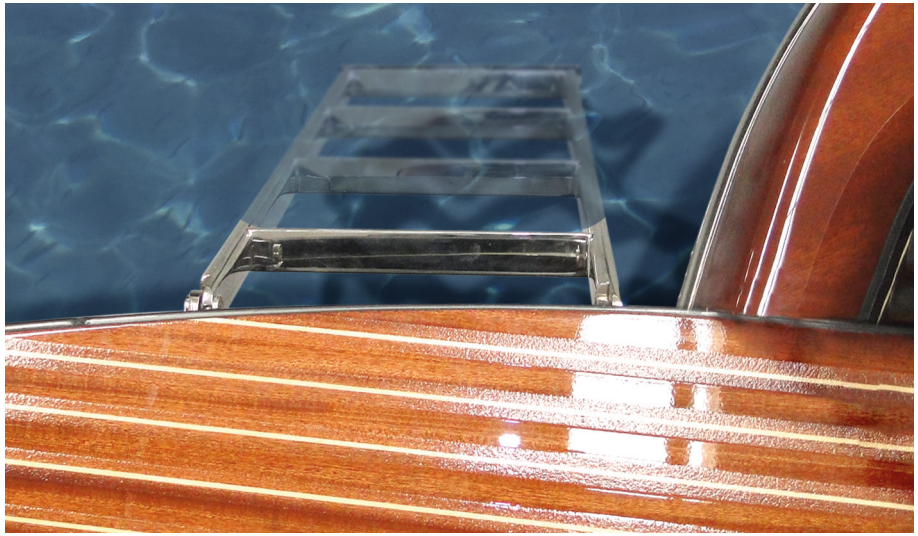

In the central part of the stern zone is located the black water suction nozzle.



Through the central walkway between the two limits sun-deck aft / access doors to the engine room, you can access the cockpit.



The fuel inlet is located aft of the starboard sun-deck.



The cockpit area of the main deck contains a large area richly furnished for the social and convivial life of the Guests. One comfortable sofa extend on the entire width and a table with folding top is located. Fore of the cockpit there is the helm station, where all main yacht steering and control instruments are installed. From the cockpit zone, all main deck equipment can be managed, such as the fire-fighting controls.



The cockpit zone is provided with important safety devices: the life rafts are located below the sofas and the portable fire extinguisher is located under the captain seat.



In order to access the life raft storage peak under the cushions of the cockpit sofa, after removing the cushions, it is necessary to completely lift and extract the hatch.



Under the cushions of the port cockpit sofa, for of the life raft storage peak, there is a compartment containing the individual life jackets.
To reach the life jackets, after removing the cushions, it will be necessary to lift the fibreglass panel by means of the relevant recess.

CAUTION

While removing the mobile parts described above, pay special attention not to hit and/or scratch the yacht.
Also pay attention in order to prevent passengers from standing in dangerous areas, especially in the area where operations are being carried out.

Beside the captain seats there is the access door to the technical room.
Under the captain seats there is a fridge.

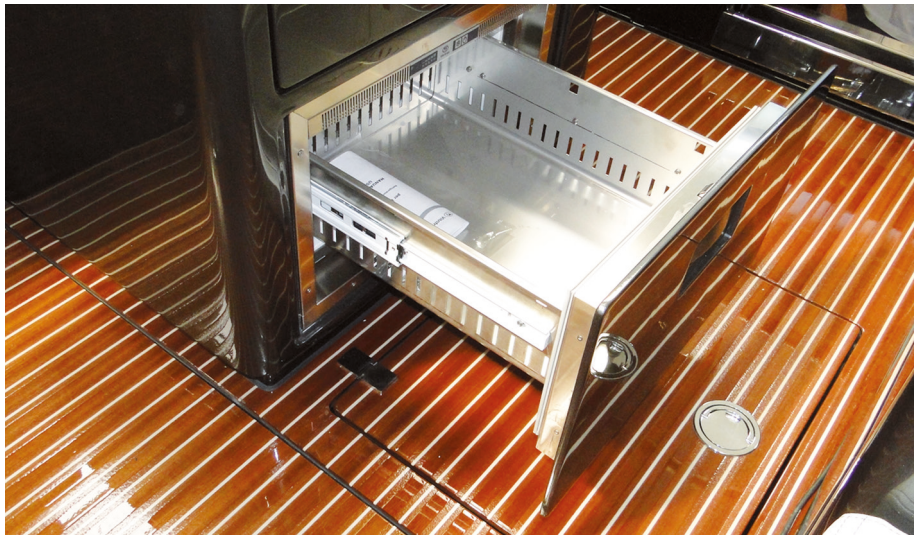

The forward part of the cockpit has been arranged with two service areas. To the port side is the bar cabinet.



The starboard side is a service unit with storage drawer.

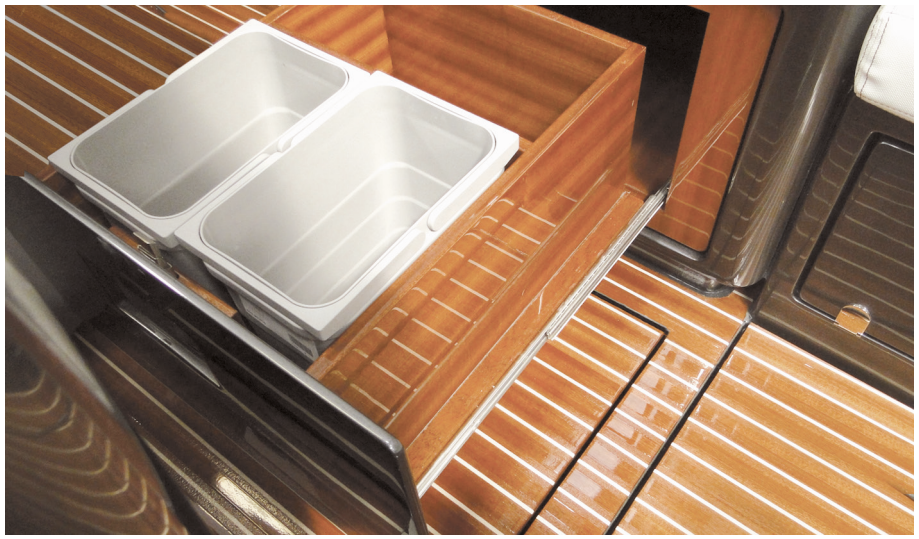

CAUTION

Do not open and leave open the top of the bar unit in navigation.

All manoeuvres, operations, navigation control, telecommunications and yacht monitoring are carried out from the helm station (see chapter 4 “Helm station” in this manual). The captain’s seat consists in a folding seat.



DANGER

Only allow authorized and qualified personnel to use the devices installed in the helm station.
The personnel operating the yacht during the various activities on board must not be under the influence of alcohol, drugs or narcotics.

To the right of the helm station, by means of a comfortable staircase, it is possible to access the lower deck.



At bow of the yacht is located a sun-deck arranged with comfortable cushions.
Abaft the sun-deck there are a glass holder and two fixed skylights.
At the far end of the bow there are the necessary equipment for anchoring and mooring, and a wide peak containing the anchor chain.

The use of mooring and anchoring equipment is described in Chapter 6 “Information for use” in this manual. The fore peak is equipped with a fresh water faucet, the anchor windlass and the relevant portable pushbutton control.

DANGER

It is forbidden, to stay or to walk on the walk-around and on the bow of the yacht during navigation, as the absence of a bulwark stay could expose people to the risk of falling at sea.



3.3.1 Navigation lights

The navigation lights installed on the yacht comply with the international Regulations as regards the minimum visibility range, horizontal and vertical brightness and colour specifications.
The rules relevant to the navigation lights must be observed from sunset to dawn and, during this period, no other lights must be visible except the lights that cannot be exchanged for those specified in this manual.

- Red and green navigation light: red on port side and green on starboard side (fixed uninterrupted light with 112° 30' sector), installed on the yacht's sides.
- Anchor riding light: white navigation light installed on the signal mast, visible from any direction (fixed uninterrupted light with 360° sector).

Night navigation requires more precaution. All rules are applicable but apart from the right of course, it is advisable to slow down and to keep the proper distance from other yachts.
It is a good rule to remember that bright lights reduce visibility at night.
Navigation lights are not watertight since it is necessary to compensate air pressure variation caused by temperature changes.
Therefore, the navigation lights are provided with a ventilation system used to allow compensation and humidity escape. The ventilation system must not be clogged with grease, dirt or other materials.

DANGER

Solvents may damage the lens of the navigation lights.
The lights must exclusively be cleaned with fresh water not containing solvents or abrasive substances.
Remove the bulbs before the application of any paint.

CAUTION

Before undertaking any navigation, the Captain should make sure that all navigation lights are operating correctly. Use the navigation lights in compliance with the regulations in force.

MAINTENANCE

At least once a week check the operation of the navigation lights.
At least once a week carry out accurate cleaning of glasses and headlights.
At least once every six months check the presence of corrosion in the connections of the navigation light cables.
At least once every six months, tighten the cable connections of the navigation lights.

The use of headlights during the various situations of use of the yacht during night navigation are illustrated below:

- **Navigation:** Masthead lights, side lights and stern lights ON.
- **At anchor:** Anchor lights ON.
- **Drifting:** Two red lights ON (no steering mast installed).
- **Stranded:** Anchor light and two red lights ON (no steering mast installed).

CAUTION

The positioning of the navigation lights is optimised by adapting the regulatory requirements to the geometry of the yacht, providing lights where they are most easily visible.
Non-steering lights (N.U.C. = Not Under Control) and a bell are not included in the on-board equipment.
The fitting of lights and sound signals is subject to the approval of the Flag Administration where the yacht is registered.

WARNING

Navigation lights, shapes and sound signals.
Where navigation lights, shapes and sound signals are installed, they must be in conformity with COLREG 1972 (II International Regulations for Preventing Collisions at Sea) or CEVNI (European Code for Inland Waterways). Regulations depending on the case.

Navigation lights diagram

ITEM	DESCRIPTION	ANGLE	COLOUR	VISIBILITY
1	Port side light	112,5°	Red	2 Miles
2	Stern side light	112,5°	Green	2 Miles
3	Anchor Light	360°	White	2 Miles

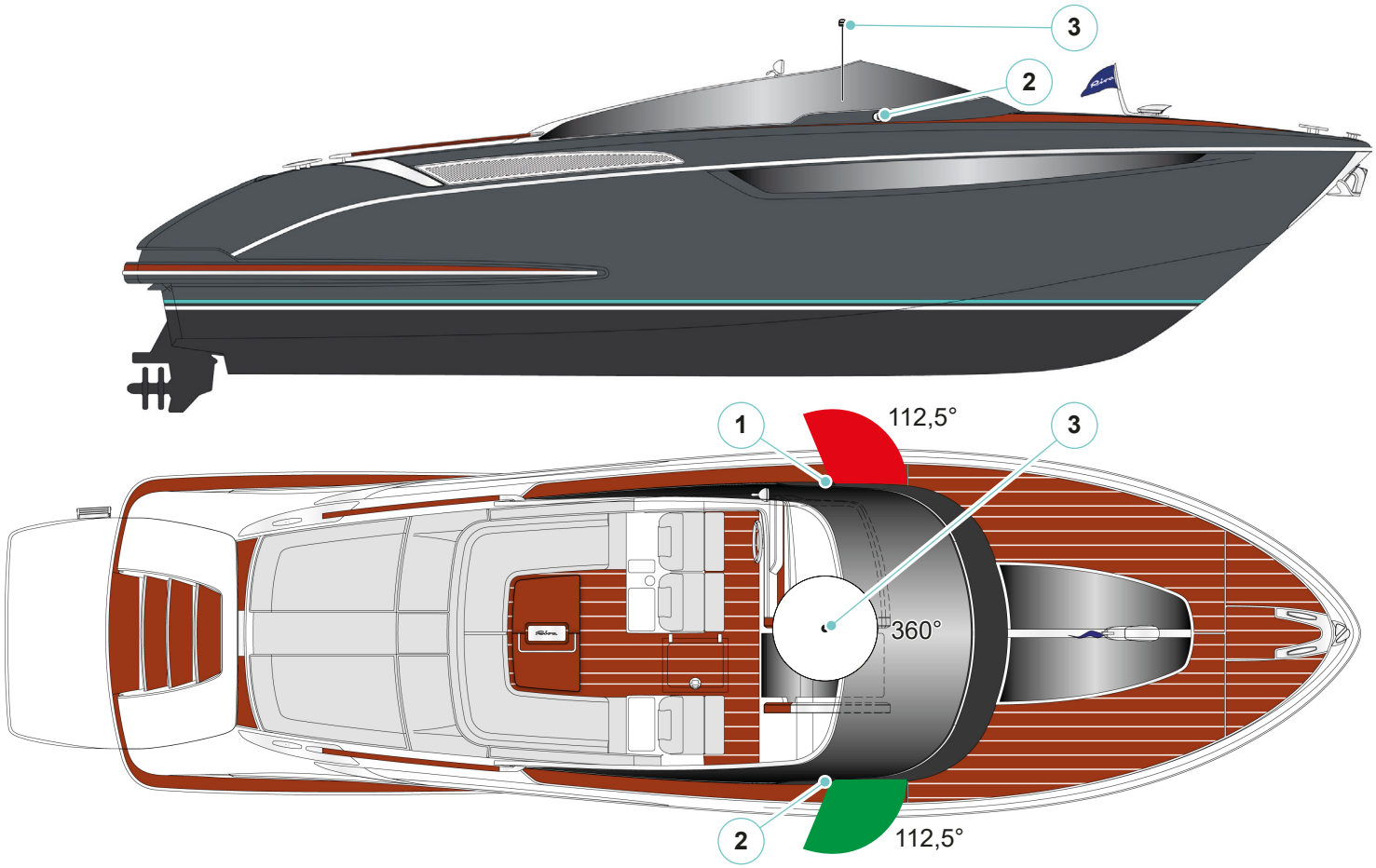

3.3.2 Mast daylight signals

In order to increase the safety of people on board, the manufacturer has provided the installation of a mast for daytime signals, in accordance with Directive 2013/53/EU.

NOTE
The combined use of daytime signals and navigation lights increases the yacht's visibility, reducing the risk of collisions.



Daytime signals have the same function as navigation lights but are more visible during the day than navigation lights.

Depending on the situation, appropriate signalling templates shall be used.

Hereunder is a list of the most common ones to adopt after installing the relevant mast:

- Yacht at anchor:
- Non-government yacht:
- Stranded yacht:
- Yacht with limited manoeuvrability:
- Yacht to trailer or towed:

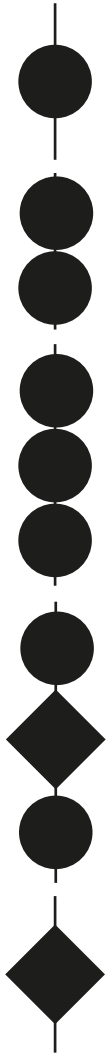

3.3.3 Anchor light positioning

The signal mast, which carries the navigation lights and the riding light on its end, is stored under the captain's seat structure, when not used.

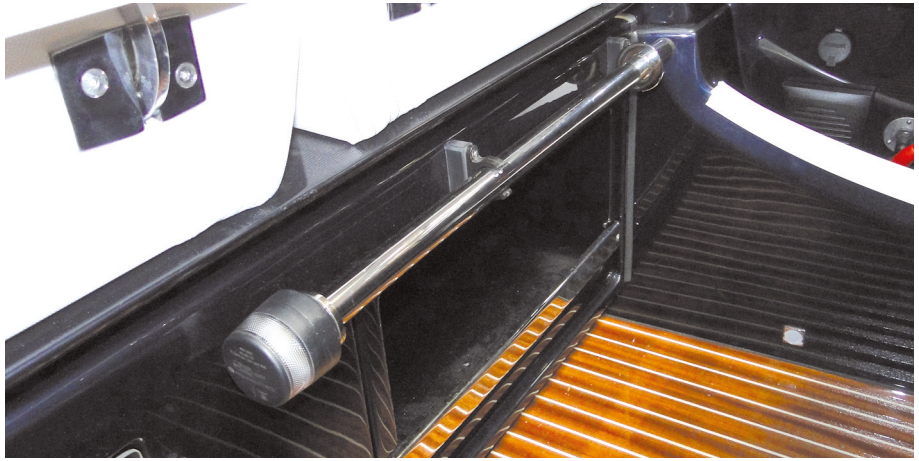

To extract the signal mast: Lift the seat of the captain couch.
Rotate the cap of the installation hole mast signals.



Enter the signal mast in the hole until it stops.

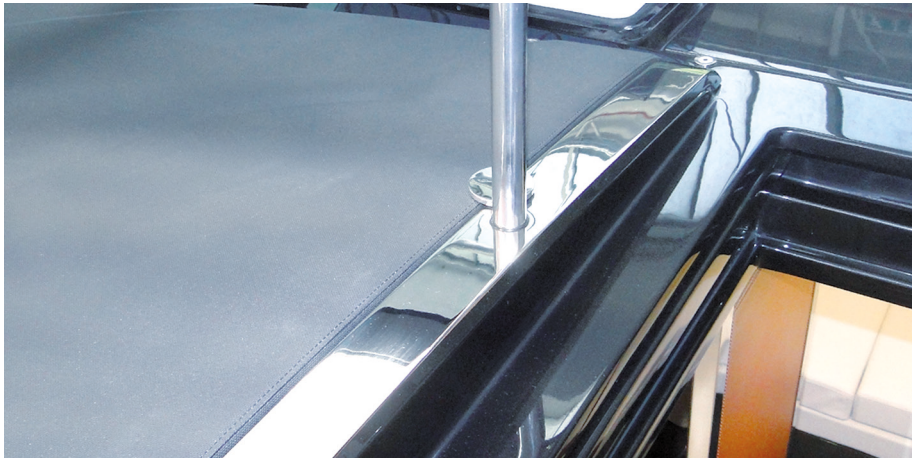



3.4 LOWER DECK

From the cockpit, through the staircase, it is possible to access the salon, open on the Owner's night area, with a great liveability effect.
The galley, provided with high-quality household appliances, is located on the starboard side of the salon's central zone.
The bathroom is located in the aft area on the port side.

1. Engine room
2. Technical room access
3. Technical room
4. Cockpit access stair
5. Main electrical panel
6. Galley
7. Owner's bed
8. Bow thruster engine inspection
9. Owner's bathroom
10. Fuel tank

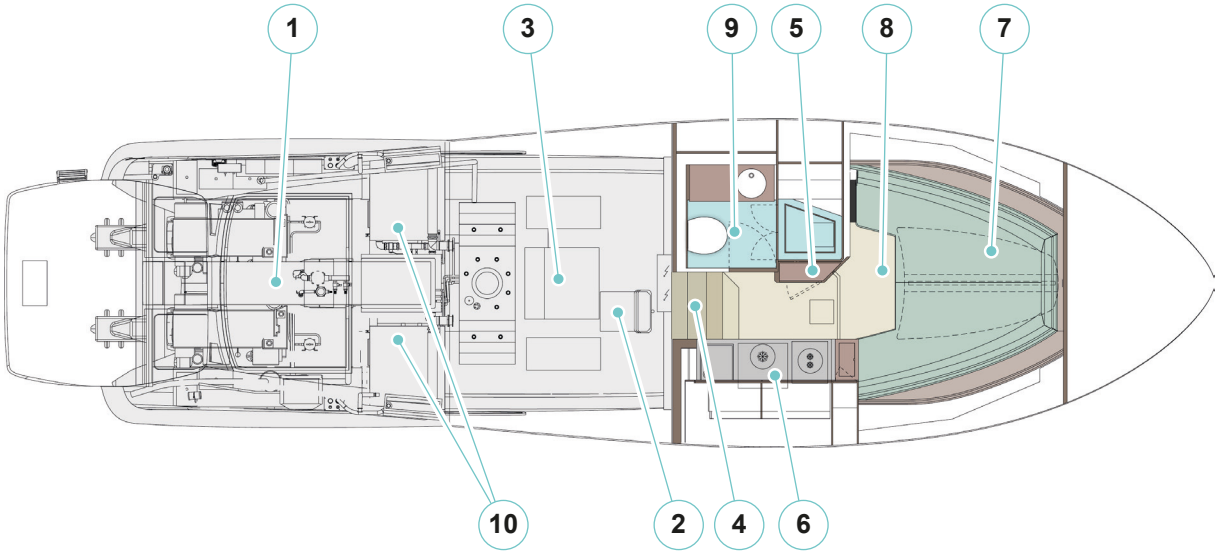



Owner’s bed



Skylight Owner’s cabin

The galley is equipped with appliances such as stove with a fire stove, microwave and instant cooler bottles. To power these devices need to turn ON the main breaker located on the electrical panel.
The worktop includes a sink supplied with cold and hot fresh water.

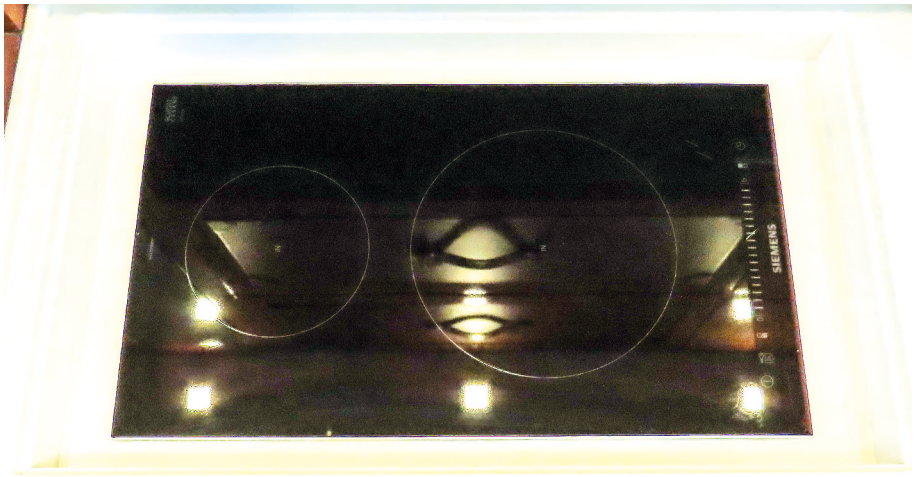

Cooking top

DANGER
Do not touch the cooking top during operation or when it is still hot.



Sink



Ice maker H_2O tank



Ice maker and fridge

CAUTION
Always check the absorption of the household appliances and deactivate them in case they are not used.

CAUTION
Do not leave pans unattended when they are on the burner. Do not cook during navigation.

CAUTION
It is recommended not to fill pots more than 50% with water and not to use pressure cookers.

CAUTION
When using the galley, increase the ventilation of the inner rooms as much as possible.
Never use the cooking top to heat the room.

CAUTION
Children are allowed to use the galley only when they are able to use its items correctly and to understand the dangers specified in the special instruction manuals. The help of an adult is required.

CAUTION
In order to eliminate smells, steams or fumes, it is necessary to turn on the suction hood at cooking start and to keep it on after cooking end for 10-15 minutes.

CAUTION
Do not put liquid food into the oven.

CAUTION
Never place metal containers with metal inserts and liquid food in the oven.

CAUTION
Please remember that the plate, even after use, can still be very hot for a long time, and that it may cause damage to property or scalds.

CAUTION
In case of navigation with rough sea, we recommend not to use the galley.

CAUTION

When the oven is on keeping open the cabinet doors containing the device.

CAUTION

When the oven is in operation to keep open the door from the unit that contains it to increase aeration.

CAUTION

Keep the access to the helm station reserved to the Captain only, in order to prevent accidental alterations of the instruments carried out by incompetent persons.

DANGER

The personnel operating the yacht during the various activities on board must not be under the influence of alcohol, narcotics or drugs.

CAUTION

It is not recommended to move during navigation, because a lateral skid of the yacht, could have a negative effect on a moving passenger, causing an accidental fall or the impact against a piece of furniture.

CAUTION

Keep all on board steps clean and dry.

CAUTION

When the appliances contained within the mobile galley are in operation maintain the open cabinet doors.

NOTE

For further information on use and maintenance, please refer to the manufacturer's manual.

The galley is provided with instant refrigerator for bottles, whose operation is described below.



Temperature adjustment inside the instant refrigerator is carried out by means of the temperature switch (**1**) installed in the galley open compartment.

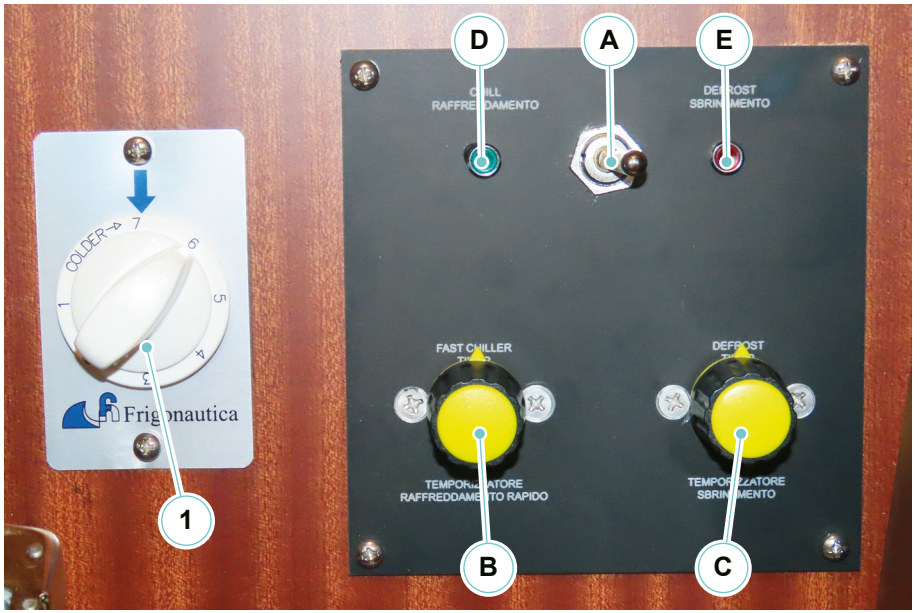

Control panel

3.4.1 Procedure for using the instant bottle refrigerator

ADJUSTING THE INNER TEMPERATURE OF THE INSTANT REFRIGERATOR

To cool the bottle more rapidly, the function “Rapid cooling”, by means of a timer, allows creating a very low temperature inside the bottle compartment for a short time.

a) To select “Rapid cooling” from the control panel, it is necessary to bring the main switch (**A**) to the cooling position, by moving the lever towards the light indicator (**D**). By using the rapid cooling timer (**B**), it is possible to set the cooling time for the bottle, from 0 to 15 minutes;
b) during rapid cooling, the light indicator (**D**) shall stay on;
c) once rapid cooling has finished, extract the bottle. This operation may be difficult because of the condensate water frosted between the bottle and its container. To facilitate this operation, it is possible to carry out a short defrosting.

REMOVING THE BOTTLE FROM THE INSTANT REFRIGERATOR

In case of difficulty when removing the bottle from the instant refrigerator, it is necessary to carry out a short defrosting cycle (1-5 minutes).

a) To defrost, the general switch (**A**) must be set to defrosting, by moving the lever towards the light indicator (**D**). By using the defrosting timer (**C**), the defrosting time is set between 0 and 5 minutes;
b) During defrosting, the light indicator (**E**) shall stay on;
c) Once defrosting has ended, it will be possible to easily remove the bottle;
d) Once defrosting has finished, take the general switch (**A**) to cooling again, by moving the lever towards the light indicator (**D**).

DEFROSTING THE INSTANT REFRIGERATOR

In case the steel container of the instant refrigerator has ice on the inside, it is necessary to defrost it.

a) To defrost, the general switch (**A**) must be set to defrosting, by moving the lever towards the light indicator (**D**). By using the defrosting timer (**C**), the defrosting time is set between 0 and 15 minutes;
b) During defrosting, the light indicator (**E**) shall stay on;
c) In case the minutes set for defrosting are not sufficient, repeat the procedure so that the ice is completely melted at the end of the defrosting time;
d) Once defrosting has finished, take the general switch (**A**) to cooling again, by moving the lever towards the light indicator (**D**).

3.5 ENGINE ROOM AND TECHNICAL ROOM

The engine room can be accessed through the two hatches **(1)** located under the stern sun decks.

The hatches can be lifted electrically, the lifting device can be activated by means of the relevant controls in the helm station.

To supply the hatch push-buttons, it is necessary to activate the magneto-thermal switch located on the 24V utility electrical panel.

The engine room has been arranged as tidily as possible with engines and pipes, by installing the auxiliary engines as far as possible on resilients, to absorb vibrations. The engine room is provided with a watertight bulkhead; all tube passages towards the bow, and vice versa, are installed on the watertight bulkhead.

Further to the engine room, your yacht is provided with a technical room, which can be accessed from the cockpit through a hatch **(2)**.

The technical room also houses further devices and technical systems.

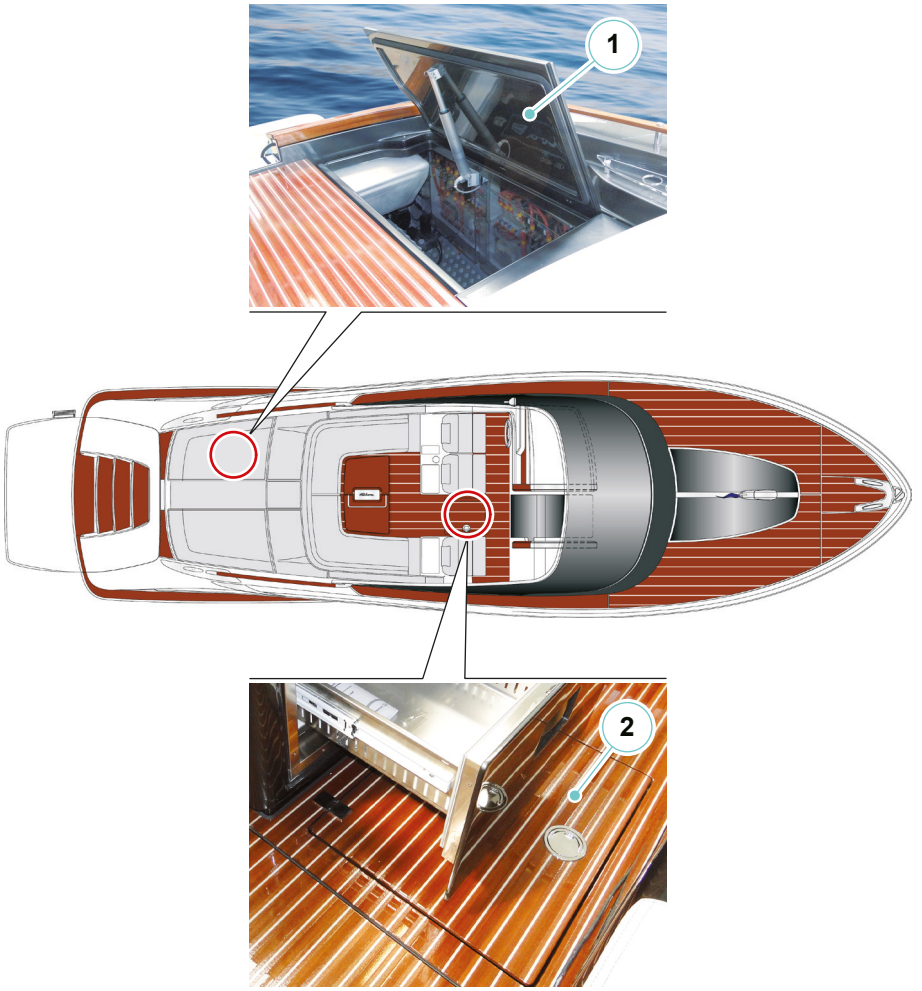



DANGER

In the engine room, the high temperatures due to the operation of the engines create strongly radiated areas, in which temperature remains high for a long time. Protect yourself and wait until they are cool before entering the engine room.



DANGER

During navigation, accessing the engine room and the system room is not allowed.

CAUTION

Do not store free-to-move items in the engine room and in the system room, as they might skid during navigation.

1. Port engine
2. Recessed plug
3. Starter battery
4. Charger
5. Box 230V
6. Fuse Box
7. Box 12V
8. Discharges to sea centralized claims
9. Hydraulic unit
10. Sea water strainer gyroscopic stabilizer
11. Port filter
12. Port fuel tank
13. Generator
14. Starboard fuel tank
15. Starboard filter
16. Generator sea water strainer
17. Generator muffler
18. Starboard drains centralized sea
19. Battery bow thruster
20. Box negative bar
21. Battery generator starter
22. Deposit generator exhaust
23. Battery auxiliary services (1)
24. Battery auxiliary services (2)
25. Discharge to the sea surrounded by water generator
26. Starboard reverse gear actuators
27. Starboard engine
28. Bilge pump engine room
29. Plug drain waste water at the shore
30. Port actuators reverse gear
31. Seawater discharge gyroscopic stabilizer
32. Autoclave
33. Port vent
34. Manifold bilge system
35. Manual bilge pump
36. Seawater pump gyroscopic stabilizer
37. Atomizer (optional)
38. Black water discharge seacock
39. Dashboard electronic box
40. Siphonbreak black water drain
41. Battery switch commands box
42. Black water tank
43. Terminal block
44. Technical room bilge pump
45. Bilge pump lower deck
46. Gray water tank
47. Gyroscopic stabilizer
48. Plenum for air intake
49. Group air conditioning
50. Water heater
51. Air conditioning seacock
52. Gray water sea discharge
53. Starboard vent nozzle
54. Air conditioning sea discharge
55. Fresh water tank
56. Generator seacock

Engine room and technical room - plan view

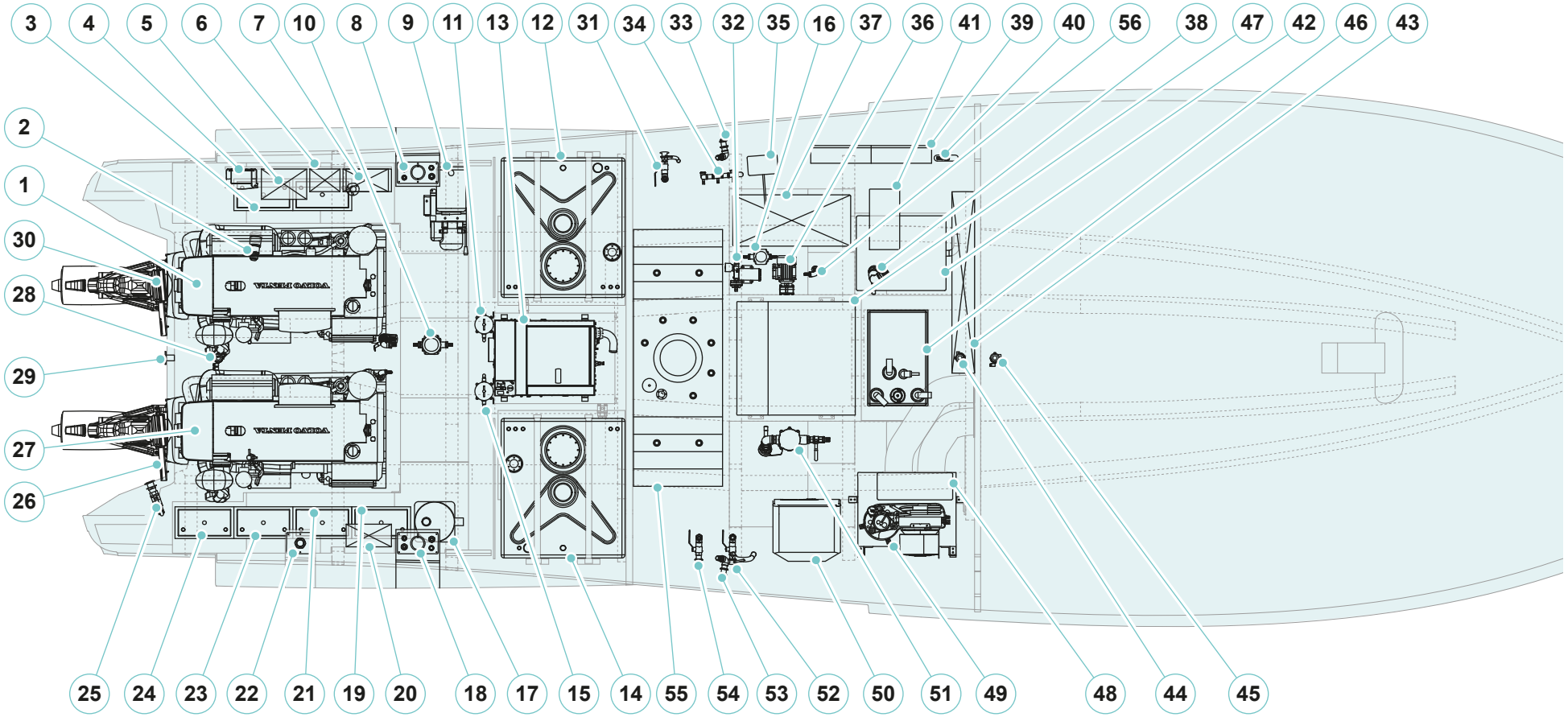

NOTES:

4 - HELM STATION

4.1 HELM STATION

All manoeuvres, operations, navigation control, telecommunications and yacht monitoring are carried out from the helm station of the main deck, with wide visibility and numerous instruments.
All devices prescribed by the various rules for safety at sea, fundamental for navigation, and the appliances required by the Owner are installed there.
Each helm station component is supplied by a magneto-thermal switch located on the 12V utility main electrical panel.

NOTE
This part of the Owner's manual contains the description of the components of the helm station in general, giving primary information for use and stating the instrument's purpose.

The dashboard is divided into four sections:
A - Front section
B - Port section
C - Starboard section
D - Battery switches panel (under the Captain's seat)

The following describes in detail the various sections.

CAUTION
It is a good rule to keep the instruments clean by washing them with wet and clean rugs, avoid using chemical or abrasive products. After navigation, it is advisable to cover instrumentation and equipment.

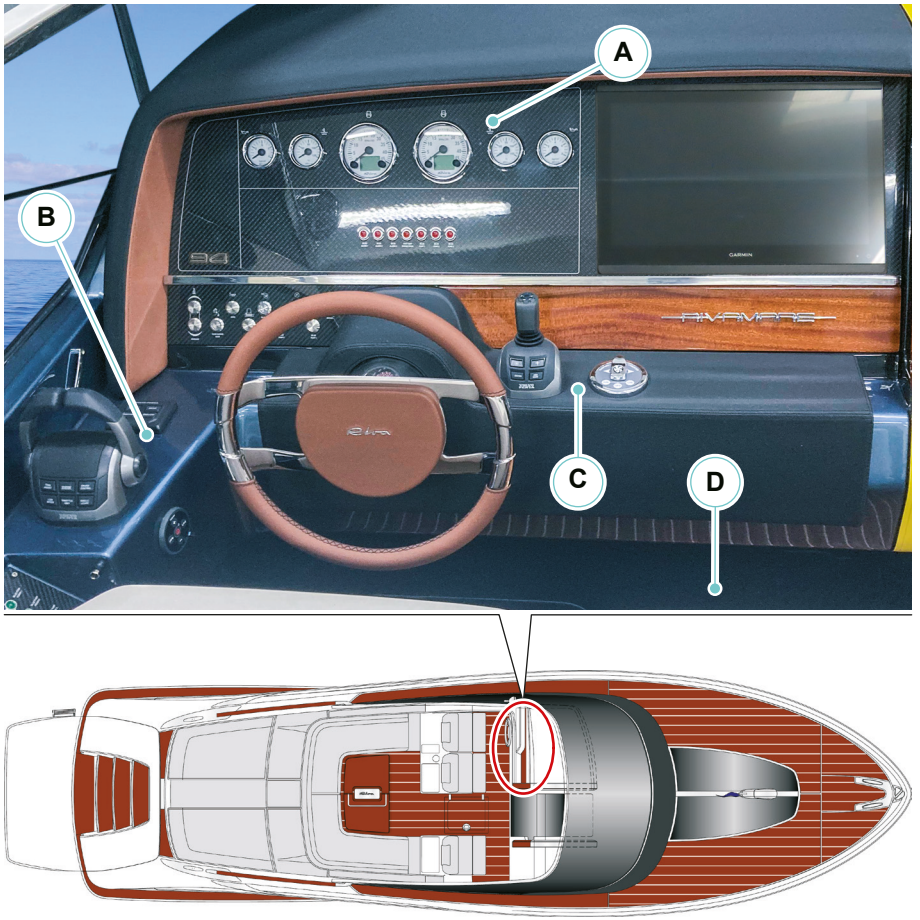

CAUTION

All electric appliances for navigation, whose parameters can be configured and set by software through the control panel, have been configured and tested upon delivery. These operations must be performed exclusively by authorized service personnel. Any modification of the preset configurations can alter the operation and reliability of the concerned system. Appliances must be used by the personnel in charge of driving the yacht and of using the systems.

4.1.1 Front section

The front section of the dashboard has the following utilities.

1. Command buttons and indicator lights
   - Windlass
   - Chain washer valve
   - Horn
   - Blowers
   - Instruments lights
   - Wipers
   - Bilge pumps 1, 2 and 3
2. Port engine analog gauges
   - Number of rpm
   - Coolant temperature
   - Oil pressure
3. Starboard engine analog gauges
   - Number of rpm
   - Coolant temperature
   - Oil pressure
4. Multifunction display
   - Radar
   - Chartplotter
   - Echosounder
   - Autopilot
   - Automatic trim control system
5. Warning lights
   - Bilge alarms 1, 2 and 3
   - High temperature in engine room
   - Bilge pumps 1, 2 and 3
6. Helm

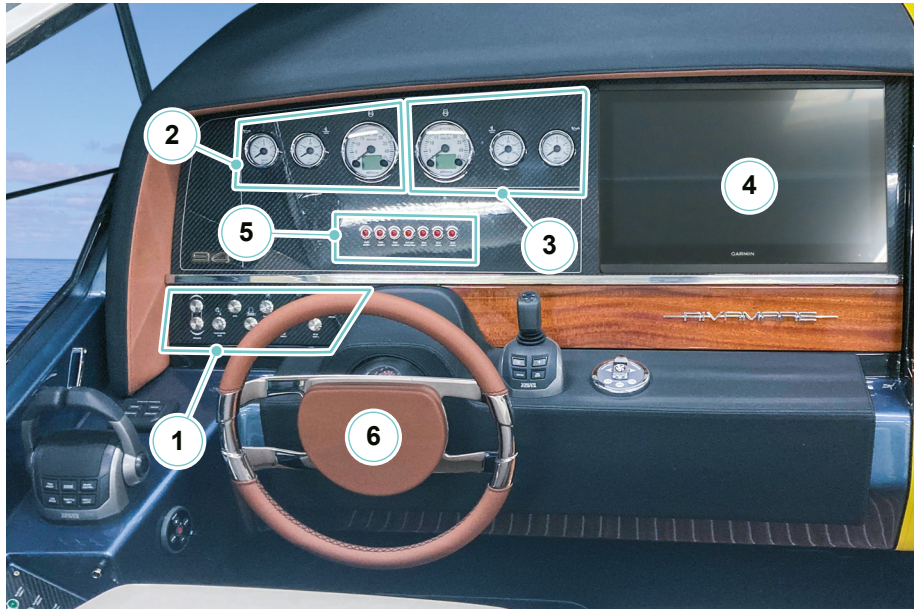

4.1.2 Port dashboard section

The port section of the dashboard is in turn divided into top and bottom and has the following utilities.

1. Control panel with buttons and lights utilities:
   - Gyroscopic stabilizer control panel
   - Port engine room hatch control buttons
   - Starboard engine room hatch control buttons
   - Garage hatch control buttons
   - Bimini control buttons
   - Navigation lights control button
   - Anchor lights control button
   - Underwater lights control button
   - Bow hull lights control button
   - Searchlight control button
   - Operating lights (ON / OFF) of bilge pumps 1, 2 and 3
2. Throttle (engine control system)
3. Power buttons, start and stop engines
4. VHF speaker
5. USB socket
6. Stereo speaker
7. VHF
8. SD card slot
9. Stereo control buttons
10. Engine room high temperature alarm reset
11. Gangway control panel

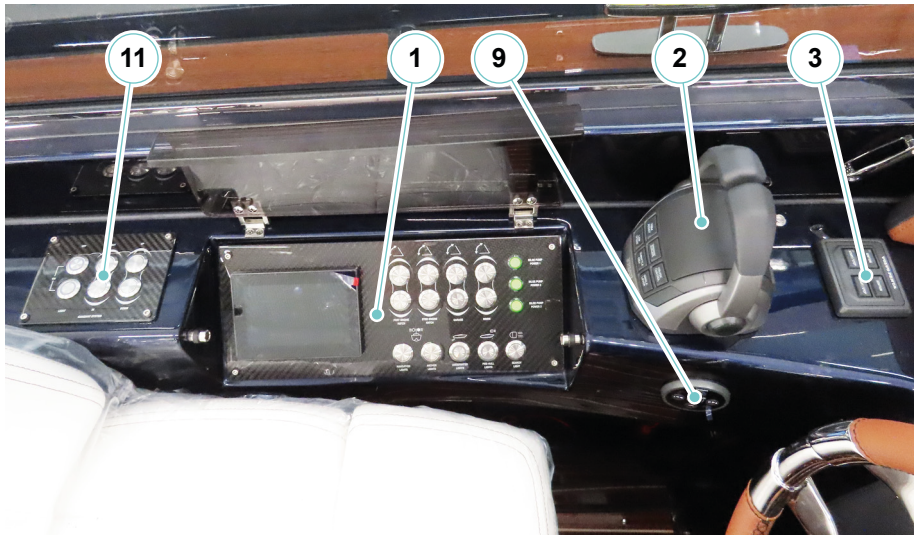

Upper section

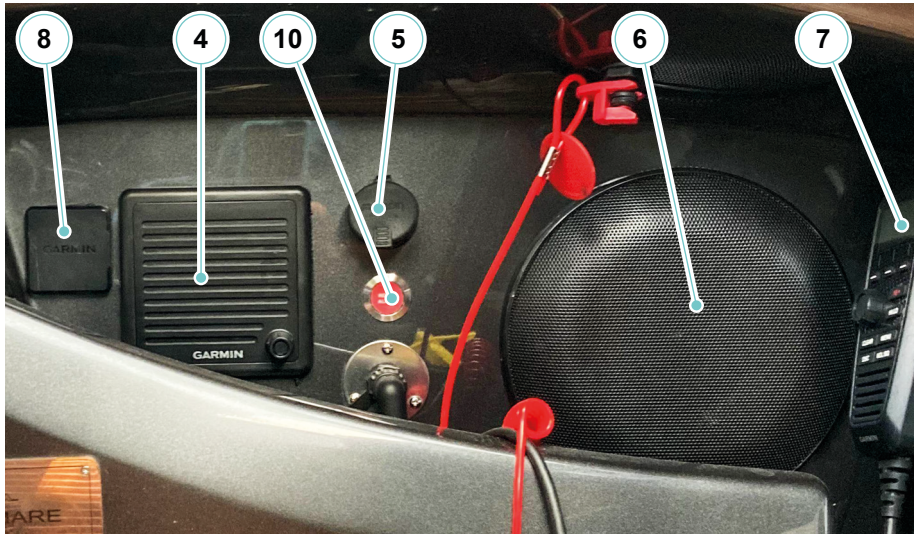

Bottom section

4.1.3 Starboard dashboard section

The starboard section of the dashboard has the following utilities.

1. Engine manoeuvre joystick
2. Bow thruster control panel

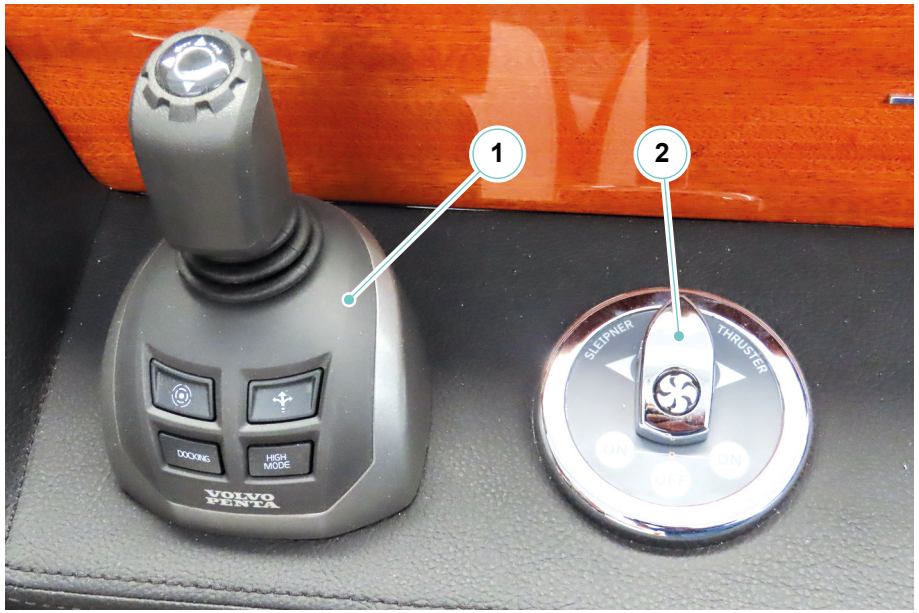

4.1.4 Battery switches panel

The button panel of the battery switch is located under the captain's seat and allows you to manage the operation of the batteries.

1. Services battery switch
2. Auxiliary battery switch
3. Enable light buttons services battery switch
4. Services / auxiliary parallel battery switch
5. Key switch for enabling engines / services battery switch
6. Port engine battery switch
7. Starboard engine battery switch
8. Enable light buttons engines battery switch
9. Parallel battery switch starboard / port engine

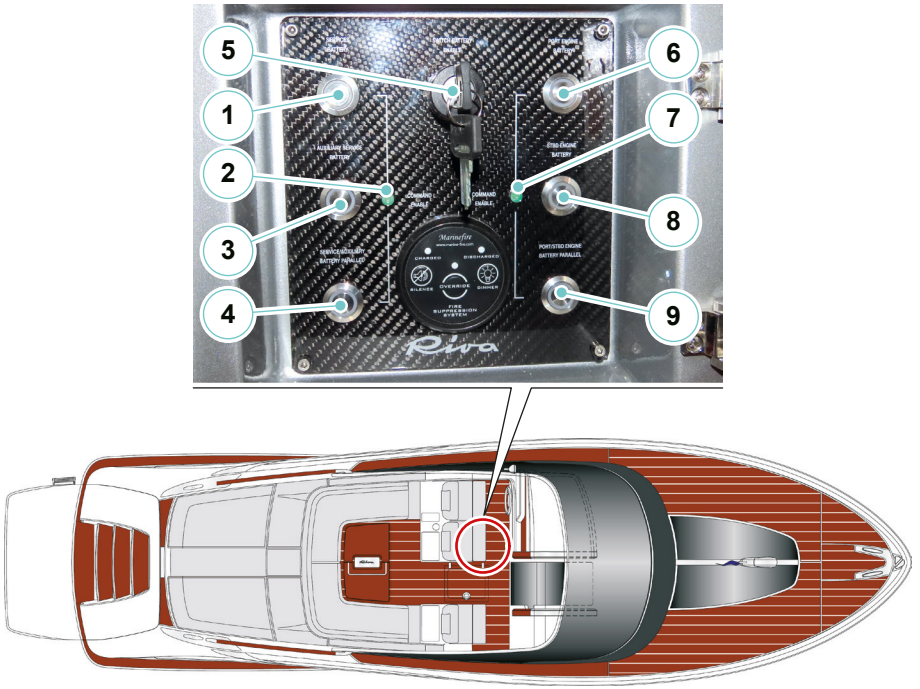

4.2 NAVIGATION INSTRUMENTS

4.2.1 Radar / chartplotter / echosounder

This instrument offers all the features of a radar, of a digital echosounder and a chartplotter.
The overlapping of the radar image and of the chartplotter combined with data windows defined by the user, transform the device in a true and real integrated navigation system.
By means of the remote control, all functions and controls of the various instruments are accessible, allowing safe navigation.

CAUTION
Pay the outmost attention during navigation, because in proximity of the yacht a shadow cone is formed, which is not covered from the radar waves.

DANGER
Radiation danger
The radar antenna emits radiations, which can damage the human body, especially the eyes. When the radar is operating, never look straight at the transmission aerial from a distance shorter than 1 m (3,3 ft).
During the radar operation it is necessary to keep out of the antenna transmission flow.
Switch OFF the radar if not expressly necessary to navigation.

CAUTION
The electronic chart is an aid to navigation, designed to facilitate the use of authorized government charts, not to replace them. Only official government charts and notices to crews contain all information needed for the safety of navigation and, as always, the Captain is responsible for their proper use.

NOTE
For further information on use and maintenance, please refer to the manufacturer's manual.

4.2.2 Magnetic compass

The magnetic compass fitted on the dashboard of a yacht of such size, is inevitably close to the magnetic fields produced by the electric and electronic systems on-board. Compass turns for compensation must be carried out by a specialized technician.
We remind you that the compensation should be carried out a couple of weeks after the launching, in order to eliminate the magnetization developed during the construction of the yacht.

CAUTION

The yacht is delivered with a compass not compensated. The compass compensation has to be carried out at Owner's responsibility, after the installation of any additional electronic equipment, and should be performed by an authorised and qualified technician. Any electrical or metallic items located in its proximity may influence the compass.

NOTE

At least once a month check the operation and the deviations. When necessary have it calibrated and compensated again.

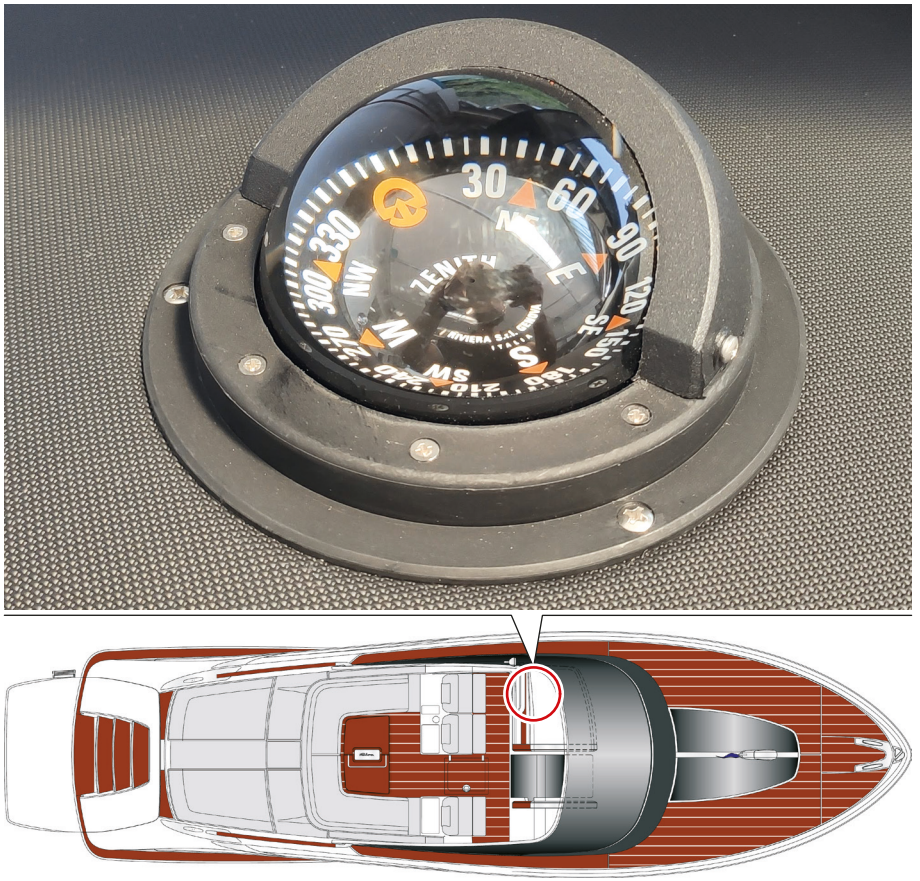

4.3 DEVICES FOR MOORING AND MANOEUVRING

4.3.1 Bow thruster control panel

The bow thruster control panel consist of an activating pushbutton (ON/OFF) and of a bi-directional joystick (starboard/port).
The joystick controls the 12V electric engine that drives the bow thruster.

The radar overlay to the mapping combined with user-defined data windows transform the instrument into a real integrated navigation system.

By remote control, you can access all the functions and commands of the various tools allowing safe navigation.

NOTE

Remember to disconnect the power supply of the system when manoeuvres are ended or during normal navigation.

DANGER

During the bow thruster operation, pay attention to possible swimmers or small yachts which may be close to the thruster tunnel.
Always stop the thruster before undertaking inspection or maintenance tasks by disconnecting the switches and possibly also the battery terminals.

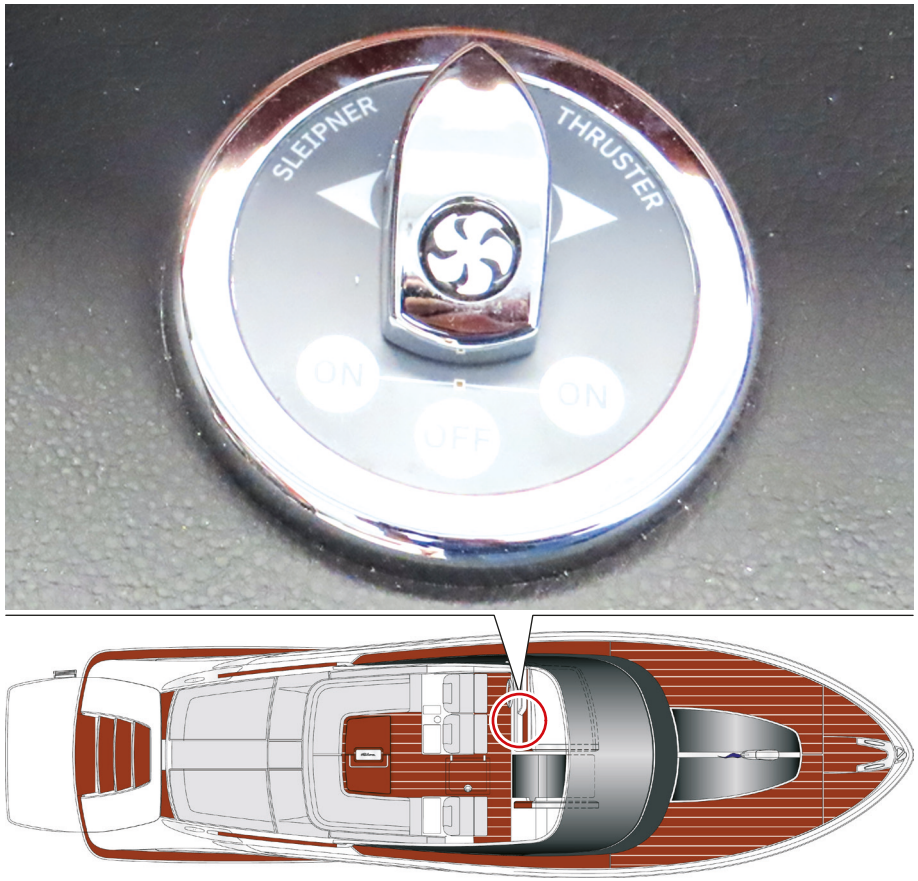

4.3.2 Windlass buttons

These buttons operate the bow anchor winch, which allows the anchor chain to be raised and lowered.

In order to supply the anchor winch, activate the relevant magneto-thermal switch located on the main electrical panel, 12V utility section.



4.4 ENGINE CONTROL PANELS

4.4.1 Engines analog gauges

The analogue indicators of the engines provide real-time data on the number of revolutions, the temperature of the coolant and the oil pressure.



NOTE

For further information on use and maintenance, please refer to the manufacturer's manual.

4.4.2 Throttle

The throttle is a system designed to manage through electrical signals RPM of the engine, the gears of the inverters and the operation of the interceptors.



NOTE

For further information on use and maintenance, please refer to the manufacturer's manual.

4.4.3 Engine ignition keys

The engine ignition keys allow you to start and stop the engines and feed. Once set to ON, the ignition keys automatically supply the following systems:

- Rudder control unit;
- Air extractors;
- Bow/stern thruster controls;
- Gear power supply control unit.

The circuit of the engine ignition keys is protected by the relevant magneto-thermal switches located on the main electrical panel, 12V utility section.

4.4.4 Engine starting push-buttons

The engine start buttons (black colour) must be held down to start the engines, and according to the instructions in this guide about the starting operations and stopping engines.

The start button must be held down to start the engines.



NOTE
For further information on use and maintenance, please refer to the manufacturer's manual.

4.5 OTHER INSTRUMENTS

4.5.1 Bimini control buttons

The buttons allow the opening and closing of the bimini installed on main deck.

To power the hydraulic unit of the bimini handling, you need to turn ON the magneto-thermal located on the electrical panel, 12V utilities.



DANGER
Never open the bimini top during navigation, but only with stationary yacht, to avoid the "sailing effect" that could damage the structure or injury persons. Do not use the bimini top in unfavourable weather conditions.

4.5.2 Bilge pump operation lights

These control lights show the operation of relevant bilge pumps.

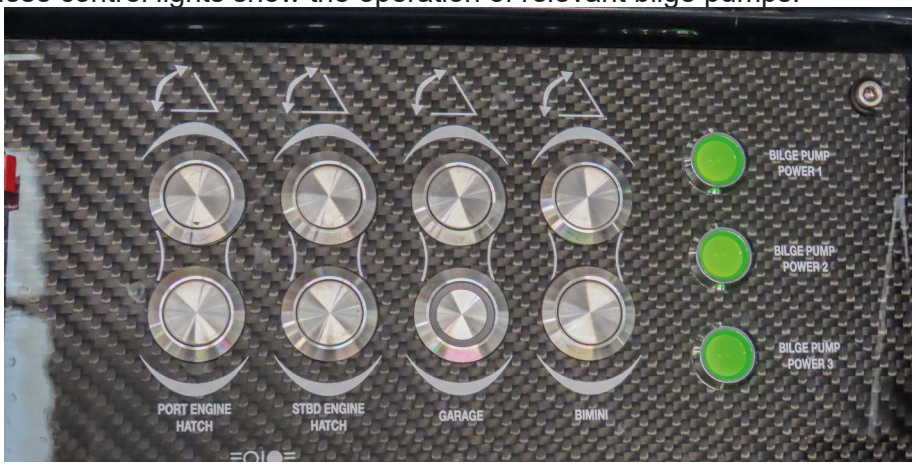

4.5.3 Engine room door opening buttons

These buttons allow the relevant doors in the engine room to be opened. To power the electric movement of the doors need to turn ON the magneto-thermal located on the electrical panel, 12V utilities.



4.5.4 VHF-DSC radio telephone

The VHF radiotelephone has a multifunction keyboard and dedicated buttons for access to Channel 16 and DSC function.



NOTE

For further information on use and maintenance, please refer to the manufacturer's manual.

OPERATING PROCEDURES

RUNNING A RADIO CALL

RUNNING A SHIP-TO-SHIP OR SHIP-TO-LAND PROCEDURE CALL.

- Select a call channel.
- Only listen to make sure there is no traffic on the channel.
- Hold down (PTT) while talking.
- Release (PTT) while listening.

NOTE

When calling a coast station, it is usually by the station operator to establish a proper working channel.

NOTE

The maximum transmission time is 5 minutes.

EXECUTION OF A DISTRESS CALL ON CHANNEL 16/9

- If you are not already tuned to the Priority channel, press the (16/9) button.
- Only listen to make sure there is no traffic on the channel.
- Hold down (PTT) and announce the call for help.
- Specify the station ID, the details yacht, the yacht's position and the nature of the emergency.
- When you are done talking, say "Pass" and release (PTT).
- Wait a moment receiving an answer.
- If you receive no response, repeat the distress call (steps 3 to 6).
- When you receive an answer, continue the conversation:
  - Hold down (PTT) while talking.
  - Release (PTT) while listening.

It may be required to switch to a working channel.

DSC PROCEDURES

INTRODUCTION TO SDC

DSC (Digital Selective Calling) is an integral part of the GMDSS (Global Maritime Distress and Safety System). It allows FM stations to communicate with each other over a dedicated digital channel (channel 70). The radio automatically exchange the contact confirmation messages and digital on channel 70, freeing the other VHF channels for voice communications. Once contact is established, both radios automatically switch to a working channel VHF to allow operators normally use voice communications. Each DSC radio has a 9-digit unique number, known as the MMSI (Maritime Furniture Service Identity), which is used to contact every single radio.

The DSC radios constantly monitor channel 70, independently of the other channels used. If someone calls the yacht by DSC, the radio will emit a warning signal so that the user can answer the call.

TO SEND A DISTRESS CALL

When sending a distress call, the nature of the emergency is not transmitted to the receiving stations.

Sending an emergency call is not specified a simpler and quicker procedure that can save time during an emergency.

1. Lift the spring loaded door, and press and hold the DISTRESS key for at least three seconds. The transceiver beeps, and the screen displays "CALL. EMERG. COUNTING DOWN ". The channel pane counts down from 3 to 1 second.
2. The VHF automatically activates an alarm, switches to Channel 70, and transmits your call on HI (25 W). Press any key to deactivate the alarm.
3. After transmitting your distress call, the radio automatically tunes to Channel 16 on HI (25 W). Press the PTT button on the microphone or handset and speak your message. The radio waits for an acknowledgment (ACK.) Of the channel 70 by a listening station.

TO SEND A DISTRESS CALL

When sending a distress call, the nature of the emergency is transmitted to the receiving stations.

4. Lift the spring-loaded door and press the DISTRESS key.
5. Use the Channel knob to select the emergency call type:
   - NOT SPECIFIC
   - FIRE
   - FLOOD
   - COLLISION
   - GROUNDING
   - TIPS
   - SINKING
   - DRIFT
   - ABANDONMENT
   - PIRATES
   - MAN AT SEA

NOTE
To exit the screen without sending a distress call, press the CLEAR key to return to the main screen or the 16/9 key to tune the channel 16.

6. Press and hold the DISTRESS key for at least three seconds.
7. The transceiver beeps, and the screen displays “CALL. EMERG. COUNTING DOWN“. The channel pane counts down from 3 to 1 second.
8. The VHF automatically activates an alarm, switches to Channel 70, and transmits your call on HI (25 W). Press any key to deactivate the alarm.
9. After transmitting your distress call, the VHF will automatically tune to Channel 16 on HI (25 W). Press the PTT button on the microphone or the GHS 10 handset and speak your message. The VHF waits for the acknowledgment (ACK.) By a listening station.

CAUTION
The DSC call should only be done in a real situation of DANGER. Otherwise, sending a DSC call it is considered an infringement.

Manual Emergency Call
- Select the channel by pressing the emergency button 16;
- Press the send button “PTT” on the handset;
- Pass slowly, enunciating the words clearly and in a loud and clear:

MAYDAY - MAYDAY - MAYDAY
THIS IS (Declare the yacht’s name three times)
MAYDAY THIS IS (Repeat the name of the yacht)
AT POSITION (To say the position)
AVARIA (To say the cause of the emergency)

- Release the transmission button (PTT).
- Wait for a short time an answer, if there is no answer repeated at short intervals, the message until you get received.

THE MAIN USES OF THE DSC
Emergency messages are sent automatically without any distinction at all stations, while other types of messages can be addressed even at some stations (or one station) through the use of MMSI identification codes.

DISTRESS CALL
It should be performed to obtain service only and exclusively if there is immediate danger for human life.

NEVER use the emergency call only in case of real need.
The call will automatically transmit its position until a coast station or yacht will not acknowledge receipt.
It is activated by a specific function from the set on the transmitter and immediately accessible button “Distress”.

EMERGENCY CALL
Is carried out when there is imminent danger for life and allows you to specify the nature of the danger for which intervention is required: explosion on board, flooding, collision, tilting, sinking, adrift, abandoning, piracy, man overboard etc..
ROUTINE CALL
It must be made to establish common communications from ship to ship, ship to shore or from shore to ship.

GROUP CALL
It allows to make calls to a specific group of yachts, for example to a fleet of yachts or during a race.

SAFETY CALL
It is typically sent to all ships by the Coast Guard to warn boaters automatically on weather conditions or navigation.

PHONETIC ALPHABET
The phonetic alphabet is used to mark parts of a message or a critical signalling or hard to recognize during voice communication.

A - Alfa	**N** - November
B - Bravo	**O** - Oscar
C - Charlie	**P** - Papa
D - Delta	**Q** - Quebec
E - Echo	**R** - Romeo
F - Foxtrot	**S** - Sierra
G - Golf	**T** - Tango
H - Hotel	**U** - Uniform
I - India	**V** - Victor
J - Juliet	**W** - Whiskey
K - Kilo	**X** - X-Ray
L - Lima	**Y** - Yankee
M - Mike	**Z** - Zulu

4.5.5 Alarm warning lights

This set of alarm warning lights, located on the synoptic panel, signals:
- High water level in the bilge of the Engine Room;
- Elevated water level in the bilge in the Technical room;
- High water level in the bilge amidships;
- High temperature in Engine Room;
- Operating alarm bilge pump Engine Room;
- Operating alarm bilge pump Technical room;
- Bilge pump alarm lower deck.

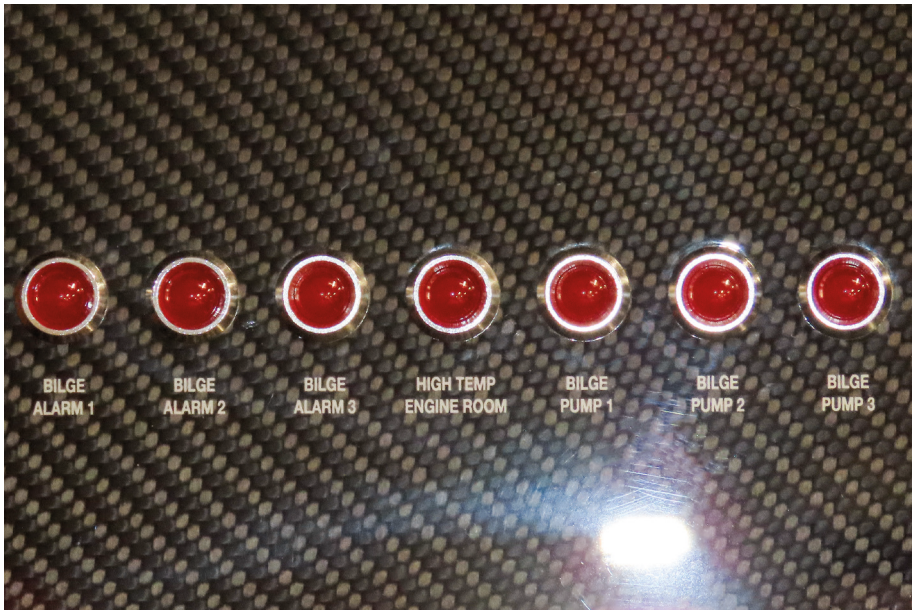

NOTES:

NOTES:

5 - ON-BOARD SYSTEMS

5.1 ELECTRIC SYSTEM

The electrical system of your yacht has been designed with the utmost attention to all aspects of safety. The system has been manufactured and installed using high-quality materials that meet or exceed industry standards. The installation has been carried out in compliance with the rules of the Naval Italian Register of Shipping (R.I.N.A.), of the Italian Electrotechnical Committee which regulates the electrical installations of pleasure yachts.
The yacht electric system consists of three distinct and separated sections:

- Service mains supplied by a nominal current of 24V D.C.
- Service mains 230V / 50 Hz supplied from shore, or alternatively, by the power generator installed on the yacht. The generator set is supplied by a set of 12V accumulators located near the generator and is recharged by an alternator, driven by the set itself.

All the electric cables have been insulated with non-flammable PVC N07VK plastic material. The cables are numbered for ease of maintenance, and they are sheathed in self-extinguishing PVC, for additional protection.
Regular maintenance and proper use of the system will contribute greatly to its continued safety. Like any other system on board, the electric system is subject to the stresses and vibrations of the hull. In addition, the electric system is exposed to high levels of corrosive salt humidity.
Check the system and its components according to a maintenance schedule.

CAUTION
The 230V AC system has features (and dangers hazards) similar to those of a domestic household system. If the system or components are misused, or poorly maintained, there is a risk of fire or personal injury.

There are two separate electrical systems on board, each having unique features:

- 12V DC
- 230V AC (50 Hz).

The DC systems are powered by three sets of storage batteries that provide power to the engines (24V), electrical panels (24V), and generator (12V).
The AC system can be supplied by the shore power system or by the on-board generator.
All the electrical services are protected by circuit breaker switches (single pole and double pole for 24V, double pole for 230V) and a ground- fault circuit breaker/switch with a sensitivity of 0.03A that protects the entire 230V AC system against accidental short-circuit contacts.

DANGER
Risk of electric shock from leakage currents.
Do not swim in harbour or marine waters.

NOTE
Systems and electric circuits
For the diagrams and the features of the electric system parts, please refer to the specific manual.

CAUTION
Before undertaking any navigation, check that the batteries are in good condition and that they supply the correct nominal current.

CAUTION

During navigation, both the rocker switch of the service batteries and the switch of the engine batteries must always be kept ON. The parallel lever switch on the two sets must be normally disconnected and therefore set to OFF.

CAUTION

For proper fuse replacement procedures refer to the on-board electrical manual delivered separately.

CAUTION

If, during navigation, an operation fault on the re-charging alternators occurs, fault which is indicated by the relevant control light on the engine dashboards, set the lever-switch of the battery sets' parallel connection to ON and keep it activated until the fault has been solved.

CAUTION

If there is a noticeable and persistent drop in battery voltage during navigation, the power generator must be switched on and it must be ensured that the independent electric charger is activated.

CAUTION

The parallel connection system between the batteries sets, driven by a button located in the main helm station, is used to increase the boosting power at engines start, under particularly climate conditions or charge condition, and for a short period of time.
This system must be activated only if the rocker switches connecting the engine and service battery banks are positioned to ON.
Do not use in case of faults on the batteries recharging circuits, for instance on the engines alternators. We advise to use this system only in emergency cases.

DANGER

The engines checking systems: accelerator and gears engagement remote controls are electronic. Their reliability is very high, but in case of a sudden black-out, it is necessary to immediately switch off the engines which is not controllable any more, by means of the relevant buttons located in the main helm station.

DANGER

Never:

- Work on the electric system while under voltage.
- Modify the electric systems of the yacht or relevant drawings: the installation, the modifications and the maintenance must be carried out only by a skilled marine electrician.
- Alter or modify the intensity of rated current of protections against overcurrent.
- Install or change electric equipment or devices with components exceeding the rated current intensity of the circuit.
- Leave the yacht unguarded with electric system under power, except for the circuits of the bilge automatic suction pumps, of fire-fighting protection and of alarm.

CAUTION

Do not modify the electric systems of the yacht or relevant drawings. The installation, the modifications or the maintenance must be carried out only by a skilled naval electrician. Inspect the system at least once a year.

CAUTION

Disconnect the shore power supply connections when the system is not in use.
Use electrical equipment with double insulation or grounding.

DANGER

Do not allow that end of the shore power cable to float in water.
An electric field may be generated which can cause injury or death to bathers nearby.

DANGER

To minimise shock and fire hazards:

- Turn OFF switch for connection to shore supply of the yacht, before connecting or disconnecting the shore power supply cable;
- Connect the shore power supply cable to the intake socket of the yacht, before connecting the shore power supply source;
- Disconnect the shore power supply cable first from shore source supply;
- Close the cover of the shore power socket firmly.

CAUTION

Do not modify the connectors of the shore power supply cable.
Use only compatible connectors.

DANGER

Electric shock hazard exists in an energized electrical system. To avoid electric shock that can cause serious injury or death, turn OFF power before opening the cover and servicing any internal components of electrical equipment.



DANGER

Operate all electrical equipment and systems (including low voltage systems) with special attention. Avoid overloading to prevent short circuits, dangerous overheating, and potential fire hazards that can lead to serious injury or death.



DANGER

The 230V AC system is similar to a domestic system in its characteristics and hazards. If improperly operated or maintained, it can cause a fire or personal injury or death.

CAUTION

Do not disconnect the battery breaker switches with engines running or you may damage the engine alternators.



DANGER

Use the switch for service/engine parallel connection, only if strictly necessary for additional supply of the batteries at engine start. If your are compelled to use the “battery parallel connection”, turn off all electric devices so as not to jeopardize their correct operation.
Disconnect them as soon as possible.



DANGER

Fire danger: it is normal that the transformer generates and gives out a lot of heat. Please be careful not to surround the transformer with any storage material and keep it free from obstructions to ensure that the transformer has adequate ventilation at all times. Do not stow flammable material close to the transformer.

CAUTION

Only a skilled naval technician can perform maintenance on the yacht’s electric system.

CAUTION

Have the transformers, thermal circuit breakers, main electrical panel and other components of the electric system checked by an authorized RIVA electrician, to ensure the correct operation and to detect any signal of overheating.



DANGER

Shock/fire hazard
Replace breakers or fuses with parts with the same amperage.
Never modify the current overload protection.

DANGER

Extreme danger
Never use open flames in the battery storage area.
Prevent sparks from reaching the battery.
The battery can explode if, while charging, a spark or a flame turn on, due to the hydrogen released.

DANGER

Shock/fire danger
Disconnect the electric system from the mains before starting any maintenance work. Never perform any maintenance work on the electric system while under voltage.
The electric devices should never exceed the rated voltage of the yacht electric circuits.
Check carefully the electric system while under voltage. The only electrical components that do not require any supervision, are the bilge automatic pumps, the fire-fighting protection circuits and the alarm circuits.

CAUTION

Stop the engine before inspecting the battery or servicing it.
Disconnect the battery cables before working on the electric system in order to prevent the generation of arcs or damaging the alternator.
Disconnect the negative cable (-) first, then the positive cable (+).

DANGER

Explosion/fire danger
Check if gas fumes are suspended in the bilge or in the generator area.

DANGER

Carbon monoxide poisoning
Start the generator only in a well ventilated area. The carbon monoxide, generated by the inner combustion of engines, is extremely toxic.
If the carbon monoxide monitor indicates “DANGER”, immediately turn off the generator and investigate cause.

CAUTION

Check the polarity of shore power when energizing the main breaker.
Reverse polarity may damage the equipment.

CAUTION

Make sure that the electric system of your yacht is connected to the correct amperage. The yacht’s AC system has no protection against surges, spikes and transients generated by AC shore power supply, often associated with unknown power sources.



DANGER

Shock hazard

People with heart problems or other conditions which make them susceptible to electric shock may still be injured by ground faults on circuits protected by GFI (Ground Fault Interrupter) outlets. No safety devices yet designed will protect against all hazards or carelessly handled or misused electric equipment or wiring.

CAUTION

The use of pressurised water on light fittings installed outdoors is prohibited.

5.1.1 Fuse

On your yacht the fuses of the electrical system are located:

- **Electrical panel in the technical room (2):** fuses of utilities on-board.
- **Electrical panel of the engine room (2):** electronics protection fuses engine.

The fuses of your yacht has the following features:

- 1A
- 2A
- 4A
- 5A
- 6,3A
- 8A
- 10A
- 50A
- 63A
- 125A
- 160A
- 250A
- 400A

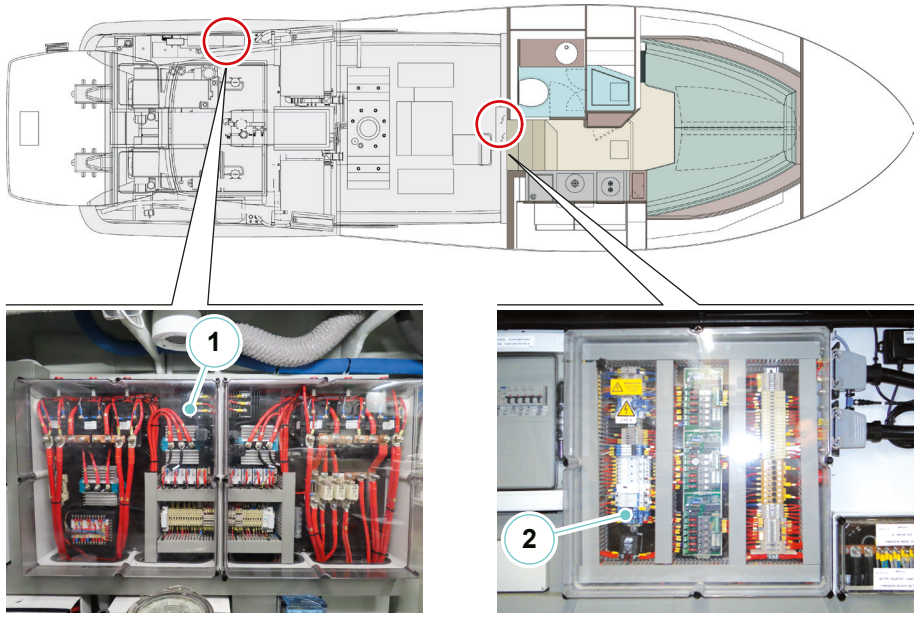

NOTE

For their placement, refer to the wiring diagrams.

WARNING

Where there is the necessity of having to replace a fuse, proceed to its replacement with a new one having the same characteristics in order to avoid damage to the load board.

5.1.2 Maintenance of the electric system

Component	Maintenance	Notes and precautions
Equipment and circuits	Inspection and cleaning	At least once every 2 weeks, have the status of the connections in the electric boards, panels and boxes checked by experienced and equipped personnel. Make sure that ground connections of electric equipment and electrical panels are tight and not oxidized. Have the absorption of the different electric engines periodically checked by skilled personnel. When cleaning the bottom hull, carefully clean the electronic instrument ground static discharger and the porous plate to which is connected the power generator grounding. Moreover, check the condition of the protection sacrificial anodes and if necessary, replace them. During the lay-up period, do not apply any antifouling on the ground static dischargers. **MAINTENANCE** At least once a week check the operation of all electrical panels. At least once every six months: • Check the possible presence of damaged cables; • Protect the various contacts.  **DANGER** Before working on panels or electrical equipment, prevent generator functioning, disconnect shore power and inverters.  **DANGER** Do not modify the electric systems or relevant drawings. The installation, the modifications or the maintenance must be carried out only by a skilled naval electrician. Frequently inspect the system.

5.1.3 Battery set

The propulsion engines' and the services' batteries of your yacht are located in the engine room, kept inside special protective boxes placed aft of the propulsion engines. Batteries are usually recharged during their operation by the alternators driven by the propulsion engines. As an alternative, they can be recharged through a special battery charger supplied by the main electrical panel, from shore or by turning on the on-board generator.
The yacht is equipped with 9 batteries, divided as follows:

- Service batteries **(4)**: 2 x 12V 120Ah.
- Engine starting battery **(1)**: 2 x 12V 120Ah.
- Generator starting battery **(3)**: 1 x 12V 120Ah.
- Bow thruster battery **(2)**: 1 x 12V 120Ah.

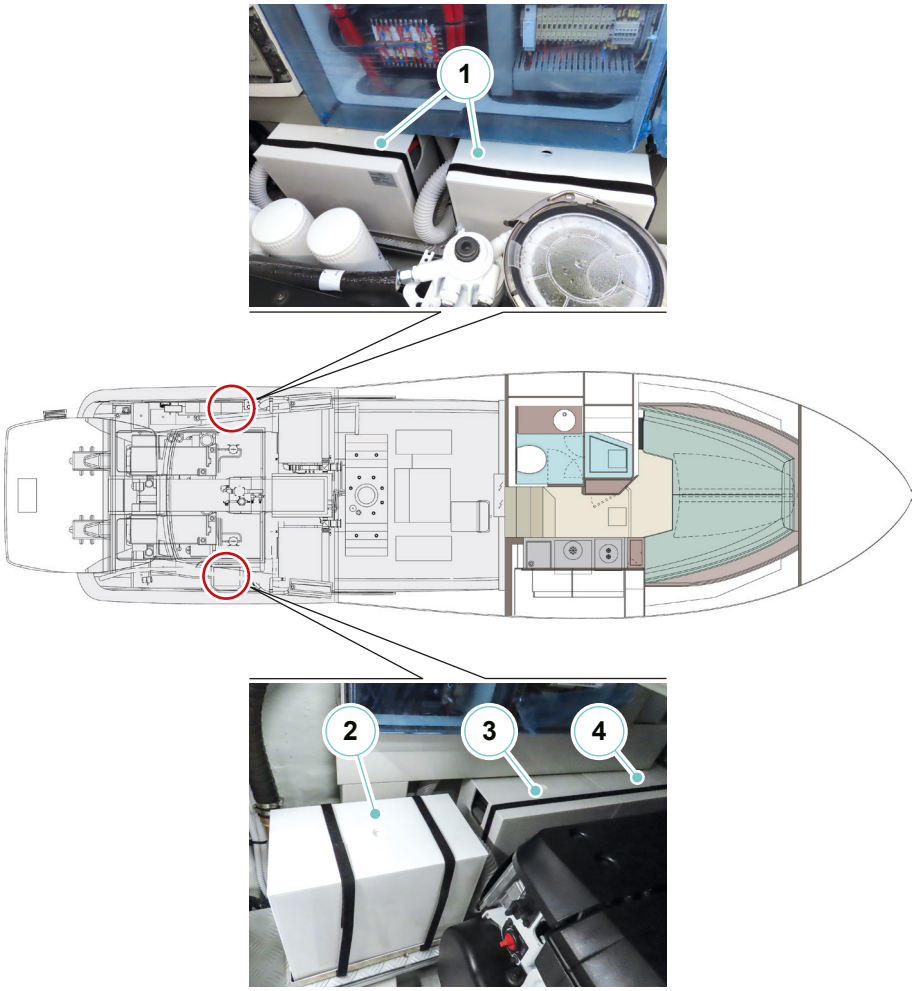

DANGER

NEVER obstruct the air intakes of the battery boxes, as natural ventilation must always be allowed for the batteries so that they do not overheat.

CAUTION

The batteries left unloaded over long periods of non operation, loose progressively their charge, until they become completely flat and get irreparably damaged.

CAUTION

Do not lay objects on the cases containing the batteries.

CAUTION

A frozen battery may blow up if used or charged; do not start a yacht with frozen battery. To prevent the battery from freezing keep it always completely charged.



DANGER

The battery releases explosive gas: do not approach flames or sparks or smoke near the battery. If the battery is used or charged in an enclosed area, ensure that there is good ventilation. Do not check the battery charge status by short-circuiting the terminals with metal tools: use a densimeter or voltmeter.



WARNING

EXPLOSION HAZARD

Any lithium battery powered device on board must be recharged only in open air areas, connected to a suitable charging system. Also please refer to the device dedicated Use and Maintenance Manual.

5.1.4 Battery breaker panel

Inside the crew cabin there is a panel which carries the lever switches of the batteries (battery breakers).
The battery breakers allow connecting, or cutting off, the batteries to/from their circuits.

- **Service battery breaker switch**
  This switch allows cutting in or out the service battery set.
- **Service/engine battery parallel connection**
  If the engine batteries are flat or not sufficiently charged for starting the propulsion engines, the battery breaker allows the parallel connection between service battery set and the engine battery set, thus enabling the start of the propulsion engines.
- **Engine battery breakers**
  This switch allows cutting in or out the engine battery set.
- **Generator battery breaker switch**
  This switch allows cutting in or out the generator battery and is located in the stern area of the engine room.
- **Direct devices breaker**
  It allows you to insert or exclude the direct utilities such as bilge pumps and alarms;

DANGER
Always keep the main breaker for safety systems and gangways in the ON position. Only disconnect in the event of maintenance or a fault.

- **Battery breaker for bow thruster**
  It enables or disables the power supply of the bow thruster.

CAUTION
This connection must be activated only if the engine batteries are not sufficiently charged. The battery parallel connection switch, must be activated only with buttons connecting the service battery banks and the engine banks set to ON.

CAUTION
Never disconnect the battery breakers with the engines running, because the engine alternators could get damaged.
Use the “Service/engine parallel connection” battery breaker only if strictly necessary and disconnect it as soon as possible.
Leave the direct uses battery breaker always switched ON.

1. General panel breaker
2. Utilities breakers
3. Engine electronics breakers
4. Generator breakers
5. Bow thruster battery breaker

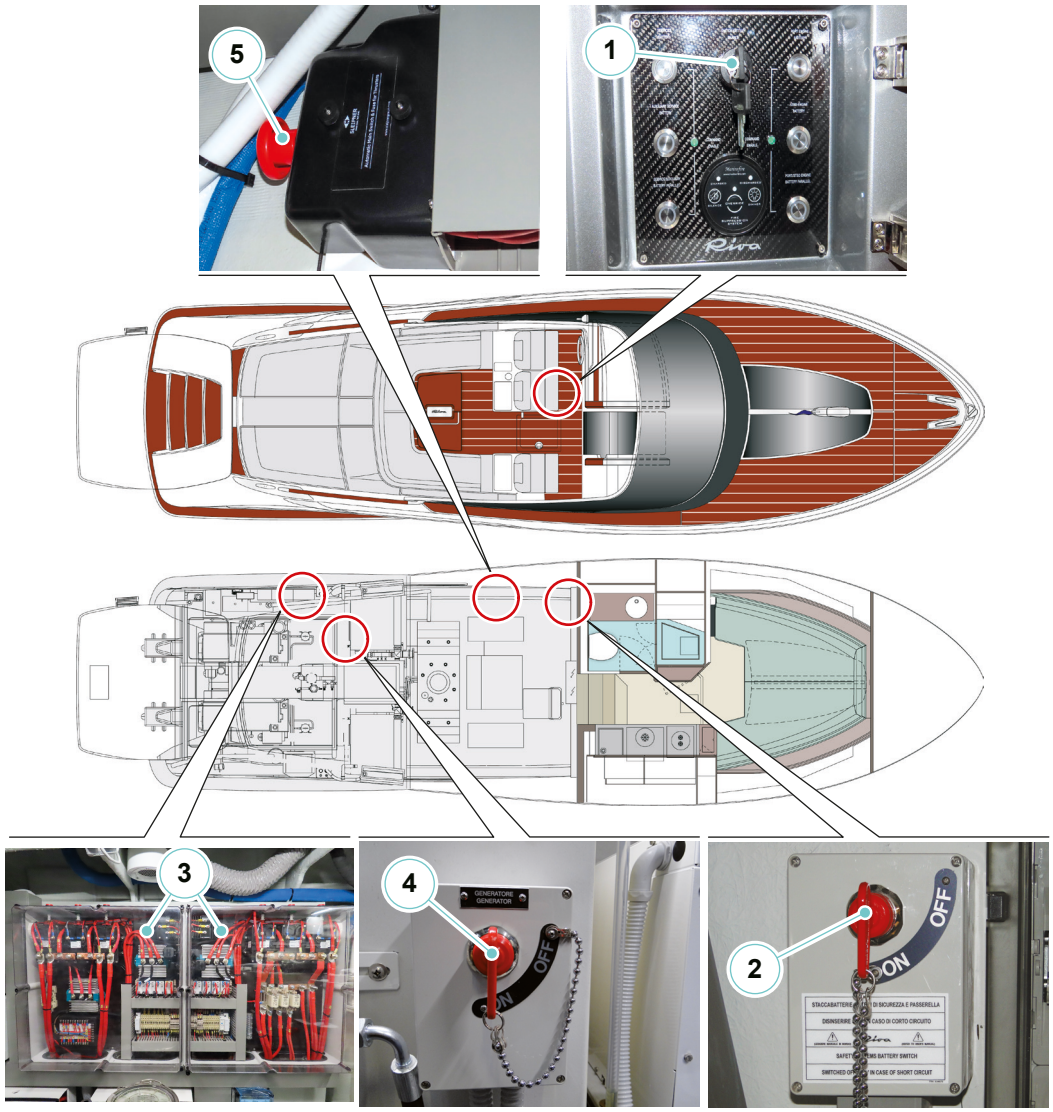

5.1.5 Maintenance of the batteries

Component	Maintenance	Notes and precautions
Batteries	Electrolyte level check	Do not wear any bracelet, ring or any other jewel when operating on batteries.
	Terminal inspection	These maintenance operations must be carried out by expert staff only. Batteries may be subject to explosion hazard, with subsequent risks of serious personal injuries. Do not use naked flames, do not smoke, do not cause sparkles or use arc-welders in the area where batteries are located.
	Charging performance check	Electrolyte may cause burns and serious injuries to eyes. Wear safety goggles and protective clothing. In case of contact with battery acid, rinse immediately the contaminated body areas with fresh water for at least 15 minutes.

5.1.6 Charge of the batteries

The batteries left uncharged over long inactivity periods progressively lose their charge, until they become completely flat and get permanently damaged.

During the yacht's idling periods, have the battery terminals disconnected, or leave them all connected and have all batteries, generator included, charged periodically.

DANGER

Avoid wrong connections; never connect a positive terminal (+) with a negative one (-).

CAUTION

Always remove the negative terminal (-) for grounding connection first and reconnect it last.
Do not disconnect battery cables when the engines or the generator are running.
Always keep the batteries charged and recharge them periodically even if the yacht is left unused. If the charge level drops to the minimum, the batteries can get permanently damaged.

CAUTION

Monitor the batteries charging voltage.
During the recharging phase, 29,1V can be reached, which is a temporary value, well tolerated both by the batteries and by the battery charger. This value must be monitored and, if this situation lasts for too long, the magneto-thermal switch of the battery charger must be disconnected.

5.1.7 Battery check (accumulators)

Carry out following checks:
Electrolyte level

- Restore the level with distilled water by removing the caps from the battery elements. The electrolyte level must be between the Max. and Min. references of the same battery.

CAUTION
Never top-up with sulphuric acid or other solutions different from demineralised or distilled water.

Terminal inspection

- Check that the battery containers are clean and dry and that the terminals are coated with silicon grease and properly fastened. Clean and grease as required. Check at least every six months.

- Positive and negative cables must be identified before connection (connect the positive terminal first and then the negative, in order to avoid sparkles).

CAUTION
A battery with the electrolyte frozen may blow up if used or charged; do not start a yacht with frozen battery.
To prevent the battery from freezing keep it always completely charged.

DANGER
Always remove the negative terminal (-) for grounding connection first and connect it last.

DANGER
Electrolyte may cause burns and serious injuries to eyes. Wear safety goggles and protective clothing.
This maintenance operation must be carried out by expert staff only.

DANGER
Batteries may be subject to explosion hazard, with subsequent risks of serious personal injuries. Do not use open flames, smoke, cause sparks or use arc-welders in the area where batteries are located. Do not disconnect battery cables when the generator is running.
Battery acid may cause serious injuries. Wear safety goggles, gloves and protective clothing.
Do not wear any bracelet, ring or any other jewel when operating on batteries.
In case of contact with battery acid, wash the contaminated part with fresh water for at least 15 minutes and consult a doctor.

5.1.8 Battery charger

On board your yacht there is a fully automatic and high-performing battery charger. The battery charger uses an optimized charging technique to rapidly and safely charge the batteries, while also supplying the connected uses. The charger is protected from short-circuits, overcharges and high temperatures (engine room).



On front of the battery charger, there's the monitoring panel which allows to control the operation of the battery charger and monitor the charging process.

The display in association with the charging bar shows the percentage of maximum current of the three battery systems together.
The symbol (V) in combination with charging bar shows the actual load voltage.

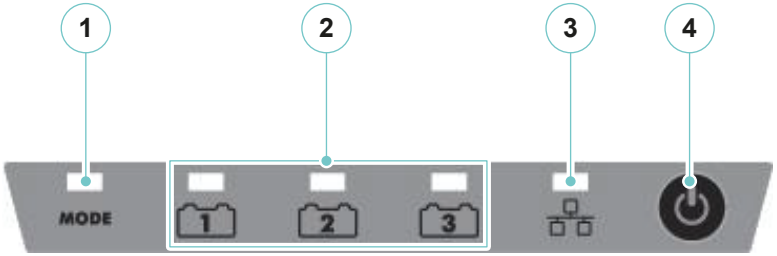

1. Mode indicator:
Indicates the battery charger status.
Solid green: Battery charger ON
Solid red: Battery charger stand-by
Blink fast red: Error

2. Battery 1, 2 and 3 charge status:
Blinking fast green: Battery in bulk stage
Blinking slow green: Battery absorption stage
Solid green: Battery in float stage

3. Network communication:
Blinking green: Network communication

4. ON/OFF button:
Hold the button for 3 seconds to switch the battery charge ON/OFF.

To switch to the “Output power” menu, press the ON/OFF button for 3 seconds.

OUTPUT POWER MENU		
LED	**LED colour**	**Meaning**
MODE	Solid orange	Output power menu
Battery 1	Solid orange	Current from 0 to 25%
Battery 2	Solid orange	Current from 25 to 50%
Battery 3	Solid orange	Current from 50 to 75%
Network communication	Solid orange	Current from 76 to 100%

CAUTION

The connection between the mains and the charger is not interrupted with the switch.

Efficiency of office

For correct operation, your batteries should not be discharged below 30-40% of their capacity, so, begin charging when you reach this level of charge. The battery charger is provided with a temperature sensor placed near the batteries. Depending on the temperature value detected, together with the remaining capacity value of the battery, the battery charger automatically adjusts the charging voltage according to the temperature greatly increasing the life of the batteries. Furthermore, in addition to the thermal compensation, the charger can compensate the voltage drop due to dispersion due to the connection cables. The battery charger is fitted with an integrated optical alarm function which is activated in case of special adjustment values are exceeded.

CAUTION

If the engines are ON, the alternators are charging the batteries; it is therefore advisable to keep the magneto-thermal of the battery charger to OFF, in order to avoid alternator damage.

DANGER

NEVER clog the air inlets of the cases containing the batteries because natural ventilation of the batteries must always be ensured so that they do not overheat.

CAUTION

Should the battery voltage drop under 18V, the battery charger will supply a current corresponding to the 25% of the maximum one and the recharge time will consequently increase.

NOTE

For further information on use and maintenance, please refer to the manufacturer’s manual.

5.1.9 Battery charger maintenance

Component	Maintenance	Notes and precautions
Battery charger	Inspection and cleaning	Check at least 2 or 3 times a year, have a specialist check the connection of each cable for looseness and oxidation. Keep the battery charger dry, clean and far from dust in order to ensure a good dissipation of heat. Periodically check the good condition of the cooling fan.



DANGER

Do not work on the battery charger or on the electric system if they are still connected to a current supply.
Modification to the electric system must be carried out exclusively by skilled staff and only after the written approval of RIVA.



DANGER

Check the internal condition of the battery charger, at least once a year. Faults like loose connections, burnt wires, etc.., with following risk of fire spreading, must be repaired immediately.

5.1.10 Shore electric supply

The yacht is equipped with a watertight plug with a plug-in connector, in accordance with regulations, for connection to the 230V 50 Hz shore electric supply **(1).**

It is common to find sockets on the shore that are not of the same size as the one supplied or that have different amperages to those on the yacht; in this case, contact the harbourmaster's office for information on the type of amperage, the availability of a new plug or an adapter.

To supply 230V equipment with shore power supply it is sufficient to connect the electric cable to the power supply socket on the shore and set the system through the switch on the switchboard **(2).**

This procedure has to be carried out in the reverse order to disconnect shore power supply.

To use the electric shore power supply:

- Turn OFF the main AC shore power supply switch located on the main electrical panel.
- Turn OFF the switch on the shore column.
- Connect the shore socket cable; first connect the plug (female on the yacht) and then connect the plug (male) on the shore column.
- Turn ON the switch on the shore column.
- Turn ON the magneto-thermal on the shore.
- Check the voltage value with the voltmeter located on the main electrical panel in the salon.
- Turn (ON) the magneto-thermal on the main electrical panel.
- Before turning ON the magneto-thermals of all uses, check the correct voltages on the voltmeter.

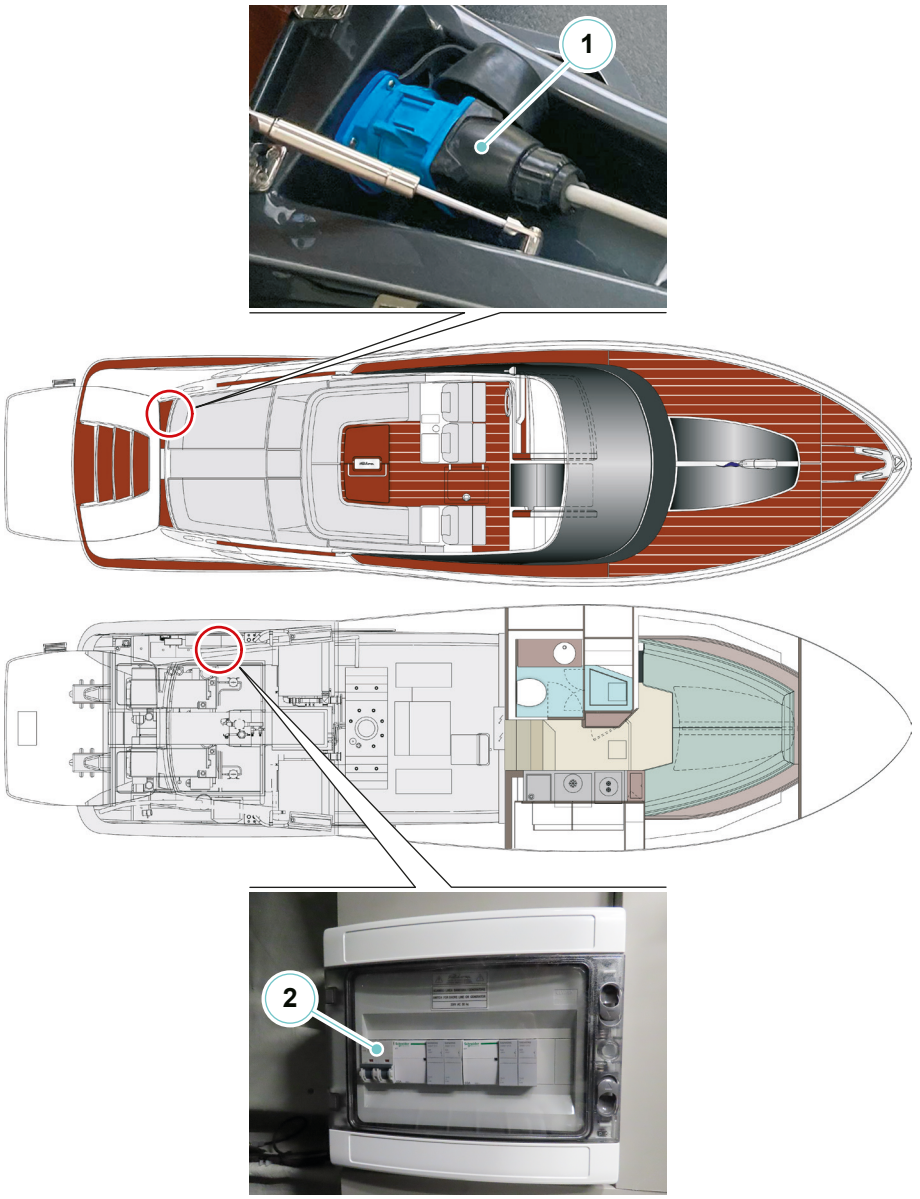

DANGER

Check that the shore power supply has a differential magneto-thermal protection before plugging it in.

DANGER

After connecting the plug to the shore, check on the voltmeter of the shore line panel that 230V 50 Hz is present.

DANGER

Before connecting the shore socket, ensure the type of voltage and the sockets available, their integrity and the absolute absence of moisture on the wire, on the socket and on the plug.
With plug connected check that wire:

- Cannot get in traction as a result of tide variations, yacht movements, etc..;
- Cannot get crushed, etc..;
- Does not dive into water.

CAUTION

Do not modify connectors of shore power supply cable, use only plug compatible connectors. If the yacht power supply cable cannot be plugged into the shore socket, ask the Port Authority for an adapter.

DANGER

Before carrying out any operation on the electrical system, detach all circuits and disconnect the shore power supply socket.
Before connecting to the shore power supply network, check that plug and socket are not spoiled and at any rate are perfectly dry.

NOTE

We recommend not leaving the shore cable connected when the yacht remains unattended.

DANGER

To reduce to the lowest the hazard of electrocution or fire:

- Open the switch for connecting the yacht to shore supply, before connecting or disconnecting the shore power supply cable;
- Connect the shore power supply cable to the intake socket of the yacht, before connecting the shore power supply source;
- Disconnect the shore power supply cable from shore power supply source first;
- Tightly fasten the lid of the shore power supply socket.

DANGER

Do not allow that the shore power supply cable floats in the water. It may cause an electric field that may cause injuries or death of the surrounding swimmers.

CAUTION

Disconnect the shore power supply connections when the system is not used.

MAINTENANCE

At least once a month check the status of the outer sheath.
At least once a month check the status of the electric contacts and eventually protect them with proper products.
At least once a month check the status of the shore socket and eventually clean it.



DANGER

Before carrying out any intervention on the electric system, disconnect all circuits (shore, generators, UPS/inverter):

- Disconnect the shore socket;
- Stopping the power generator and turn OFF the generator magneto-thermal;
- Disconnect the UPS and the possible inverter.



DANGER

Do not leave shore power supply connected without people on board.



DANGER

Before carrying out any intervention on the electric system, disconnect all circuits and the shore connection.



DANGER

Risk of electric shock from leakage currents. Never swim in waters near harbours or marinas.

CAUTION

Do not modify connectors of shore power supply cable, use only plug compatible connectors.

CAUTION

The connection must be performed under safety conditions with not powered connections and by paying attention to carry out a correct grounding.

5.1.11 Main electrical panel

The main electrical panel allows distributing the electric current to the different on-board uses and appliances, through magneto-thermals and selectors located on the panel and, at the same time, monitoring the electric system by means of amperometers and voltmeters.
The following main sections have been identified, in order to make the descriptions easier:

1. Battery amperometers and voltmeters, alarm indicators and black water controls.
2. 230V line amperometers and voltmeters, generator control and power selector switch.
3. 12V uses.
4. 230V uses.

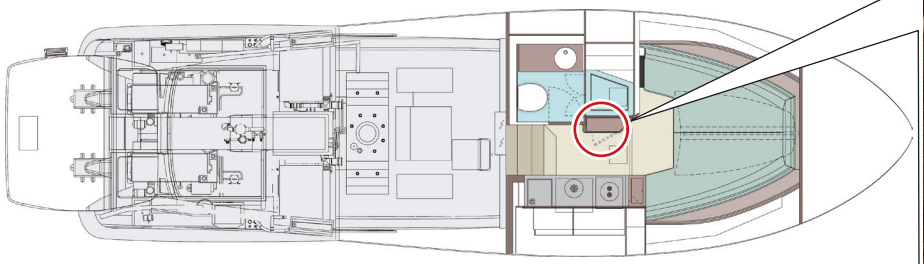

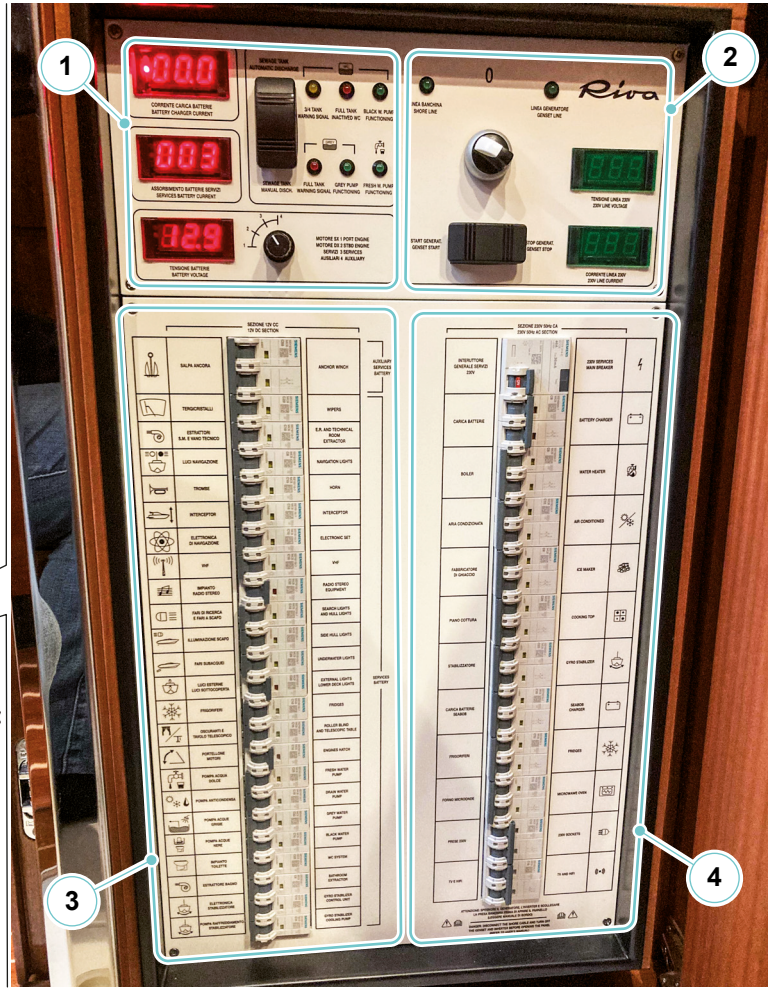

1 Battery amperometers and voltmeters, alarm indicators and black water controls

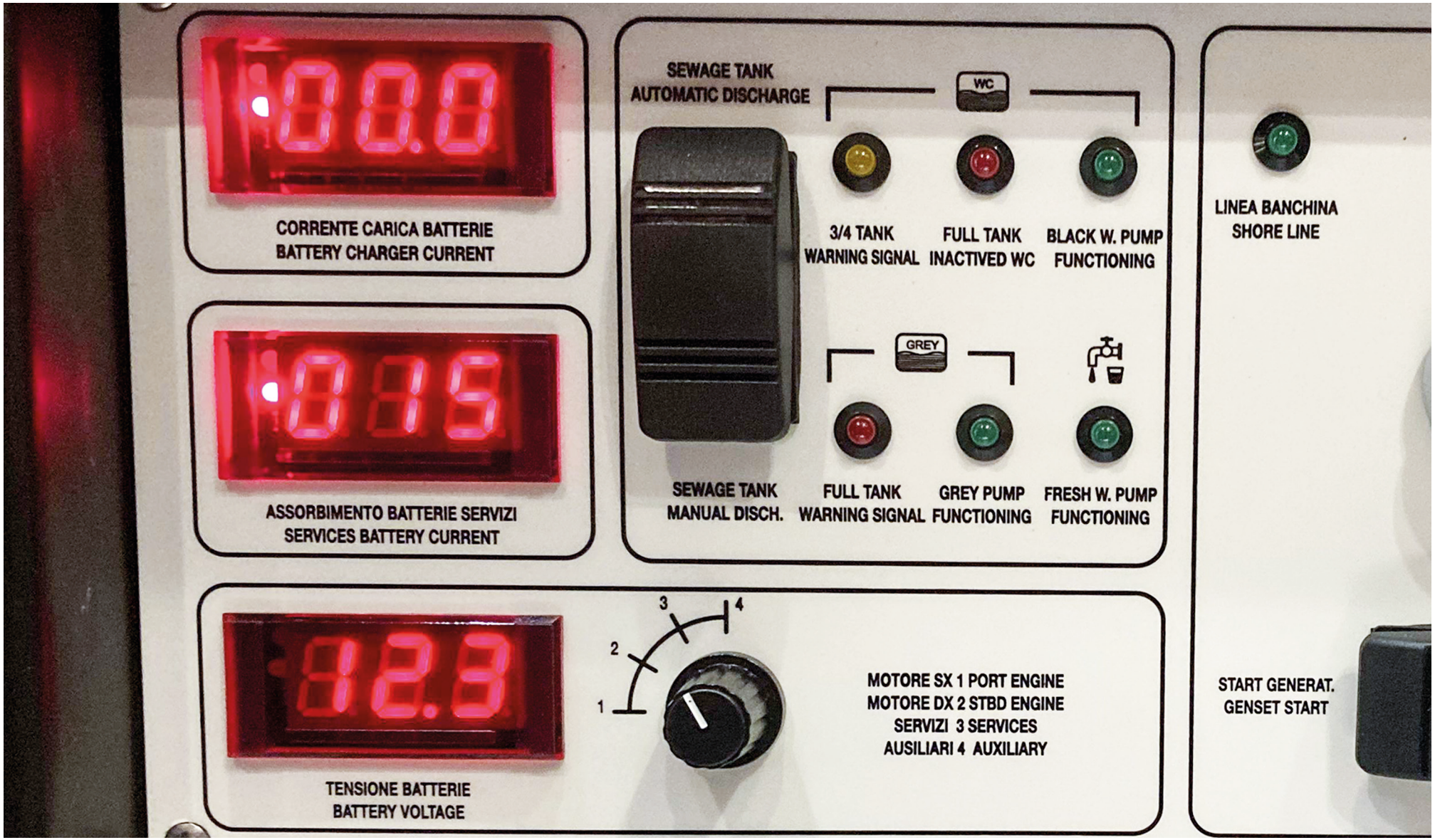

2 230V line amperometers and voltmeters, generator control and power selector switch

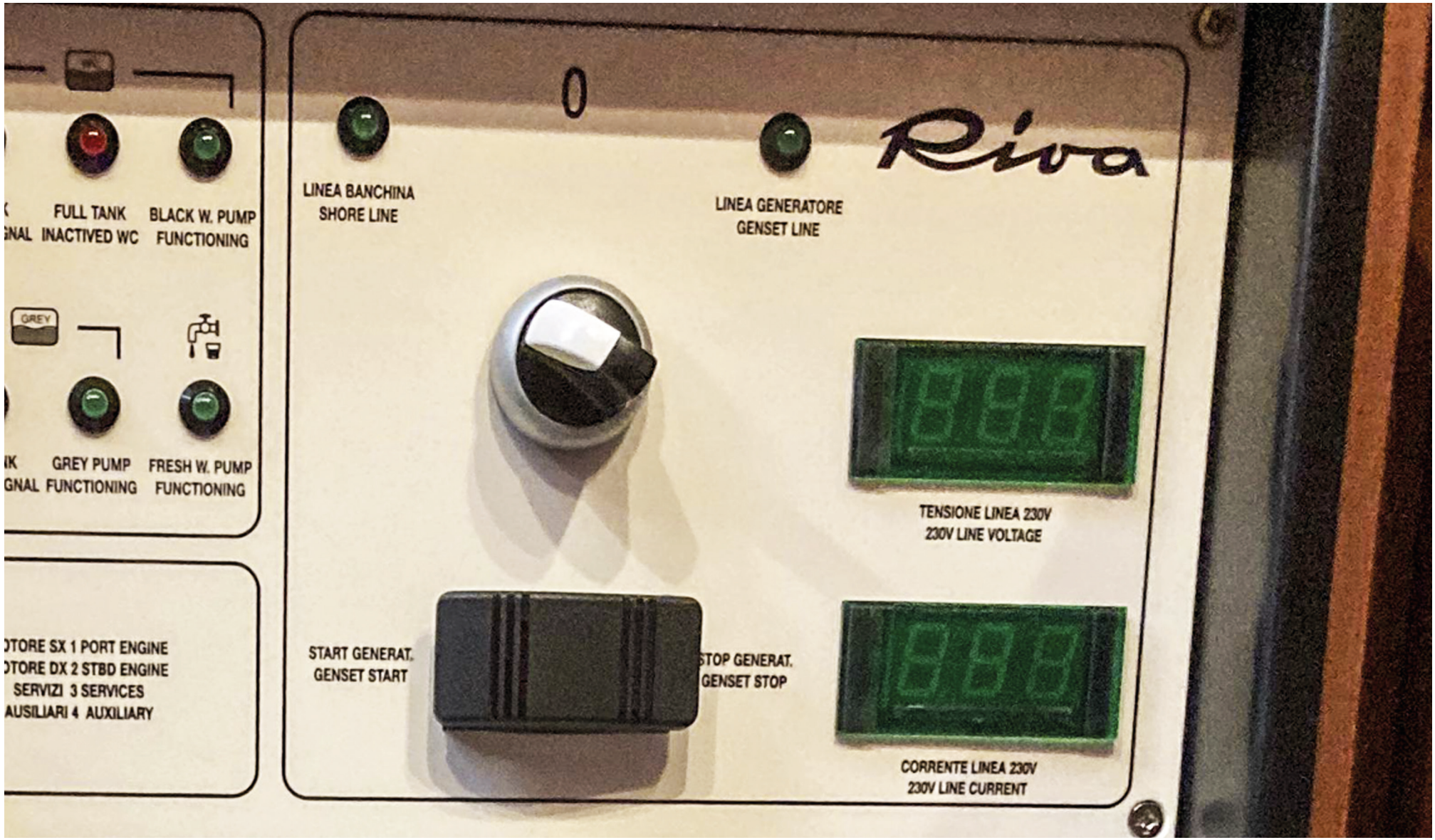

3 12V uses

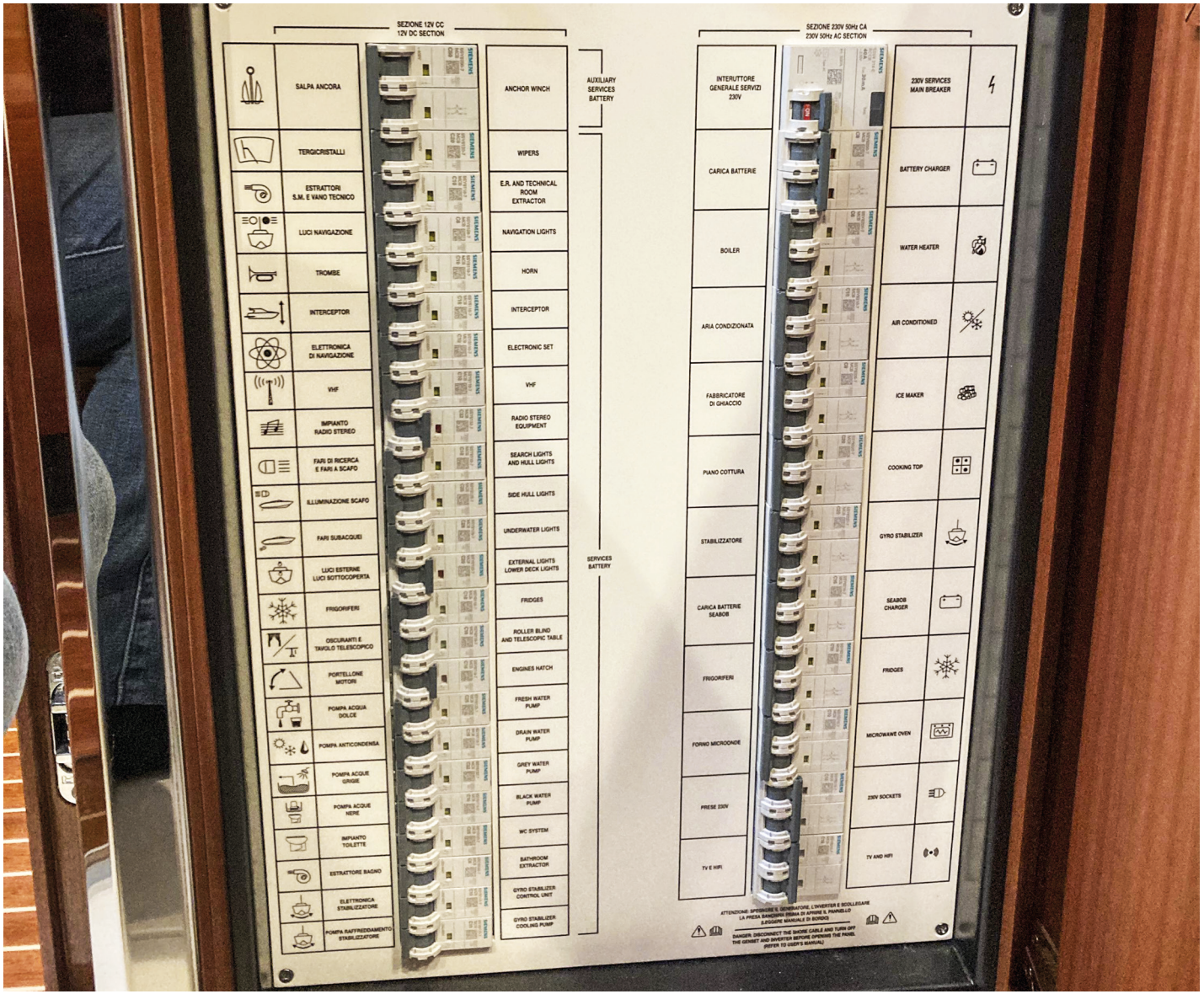
SEZIONE 12V CC
12V DC SECTION
SALPA ANCORA
TERGICRISTALLI
ESTRATTORI S.M. E VANO TECNICO
LUCI NAVIGAZIONE
TROMBE
INTERCEPTOR
ELETTRONICA DI NAVIGAZIONE
VHF
IMPIANTO RADIO STEREO
FARI DI RICERCA E FARI A SCAFO
ILLUMINAZIONE SCAFO
FARI SUBACQUEI
LUCI ESTERNE LUCI SOTTOCOPERTA
FRIGORIFERI
OSCURANTI E TAVOLO TELESCOPICO
PORTELLONE MOTORI
POMPA ACQUA DOLCE
POMPA ANTICONDENSA
POMPA ACQUE GRIGIE
POMPA ACQUE NERE
IMPIANTO TOILETTE
ESTRATTORE BAGNO
ELETTRONICA STABILIZZATORE
POMPA RAFFREDDAMENTO STABILIZZATORE
ANCHOR WINCH
WIPERS
E.R. AND TECHNICAL ROOM EXTRACTOR
NAVIGATION LIGHTS
HORN
INTERCEPTOR
ELECTRONIC SET
VHF
RADIO STEREO EQUIPMENT
SEARCH LIGHTS AND HULL LIGHTS
SIDE HULL LIGHTS
UNDERWATER LIGHTS
EXTERNAL LIGHTS LOWER DECK LIGHTS
FRIDGES
ROLLER BLIND AND TELESCOPIC TABLE
ENGINES HATCH
FRESH WATER PUMP
DRAIN WATER PUMP
GREY WATER PUMP
BLACK WATER PUMP
WC SYSTEM
BATHROOM EXTRACTOR
GYRO STABILIZER CONTROL UNIT
GYRO STABILIZER COOLING PUMP
AUXILIARY SERVICES BATTERY
SERVICES BATTERY
SEZIONE 230V 50Hz CA
230V 50Hz AC SECTION
INTERUTTORE GENERALE SERVIZI 230V
CARICA BATTERIE
BOILER
ARIA CONDIZIONATA
FABBRICATORE DI GHIACCIO
PIANO COTTURA
STABILIZZATORE
CARICA BATTERIE SEABOB
FRIGORIFERI
FORNO MICROONDE
PRESE 230V
TV E HIFI
230V SERVICES MAIN BREAKER
BATTERY CHARGER
WATER HEATER
AIR CONDITIONED
ICE MAKER
COOKING TOP
GYRO STABILIZER
SEABOB CHARGER
FRIDGES
MICROWAWE OVEN
230V SOCKETS
TV AND HIFI

4 230V uses

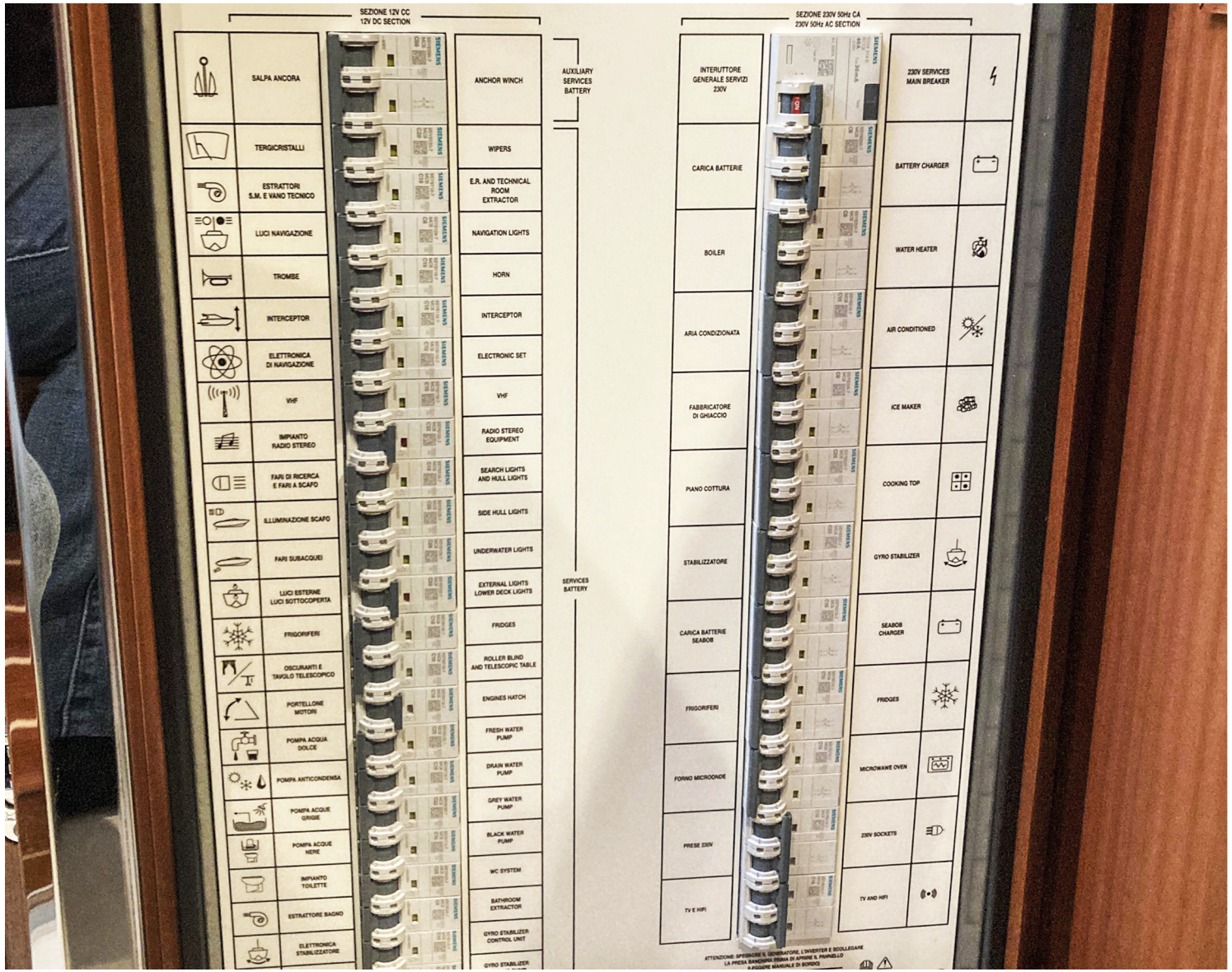
SEZIONE 12V CC
12V DC SECTION
SALPA ANCORA
TERGICRISTALLI
ESTRATTORI S.M. E VANO TECNICO
LUCI NAVIGAZIONE
TROMBE
INTERCEPTOR
ELETTRONICA DI NAVIGAZIONE
VHF
IMPIANTO RADIO STEREO
FARI DI RICERCA E FARI A SCAFO
ILLUMINAZIONE SCAFO
FARI SUBACQUEI
LUCI ESTERNE LUCI SOTTOCOPERTA
FRIGORIFERI
OSCURANTI E TAVOLO TELESCOPICO
PORTELLONE MOTORI
POMPA ACQUA DOLCE
POMPA ANTICONDENSA
POMPA ACQUE GRIGIE
POMPA ACQUE NERE
IMPIANTO TOILETTE
ESTRATTORE BAGNO
ELETTRONICA STABILIZZATORE
ANCHOR WINCH
AUXILIARY SERVICES BATTERY
WIPERS
E.R. AND TECHNICAL ROOM EXTRACTOR
NAVIGATION LIGHTS
HORN
INTERCEPTOR
ELECTRONIC SET
VHF
RADIO STEREO EQUIPMENT
SEARCH LIGHTS AND HULL LIGHTS
SIDE HULL LIGHTS
UNDERWATER LIGHTS
EXTERNAL LIGHTS LOWER DECK LIGHTS
SERVICES BATTERY
FRIDGES
ROLLER BLIND AND TELESCOPIC TABLE
ENGINES HATCH
FRESH WATER PUMP
DRAIN WATER PUMP
GREY WATER PUMP
BLACK WATER PUMP
WC SYSTEM
BATHROOM EXTRACTOR
GYRO STABILIZER CONTROL UNIT
GYRO STABILIZER
SEZIONE 230V 50Hz CA
230V 50Hz AC SECTION
INTERUTTORE GENERALE SERVIZI 230V
CARICA BATTERIE
BOILER
ARIA CONDIZIONATA
FABBRICATORE DI GHIACCIO
PIANO COTTURA
STABILIZZATORE
CARICA BATTERIE SEABOB
FRIGORIFERI
FORNO MICROONDE
PRESE 230V
TV E HIFI
230V SERVICES MAIN BREAKER
BATTERY CHARGER
WATER HEATER
AIR CONDITIONED
ICE MAKER
COOKING TOP
GYRO STABILIZER
SEABOB CHARGER
FRIDGES
MICROWAVE OVEN
230V SOCKETS
TV AND HIFI

5.1.12 Technical room electrical panel

This is located at the bow end of the technical room.



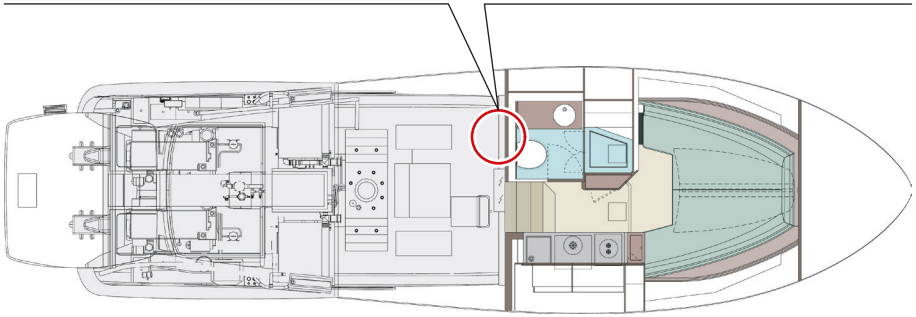

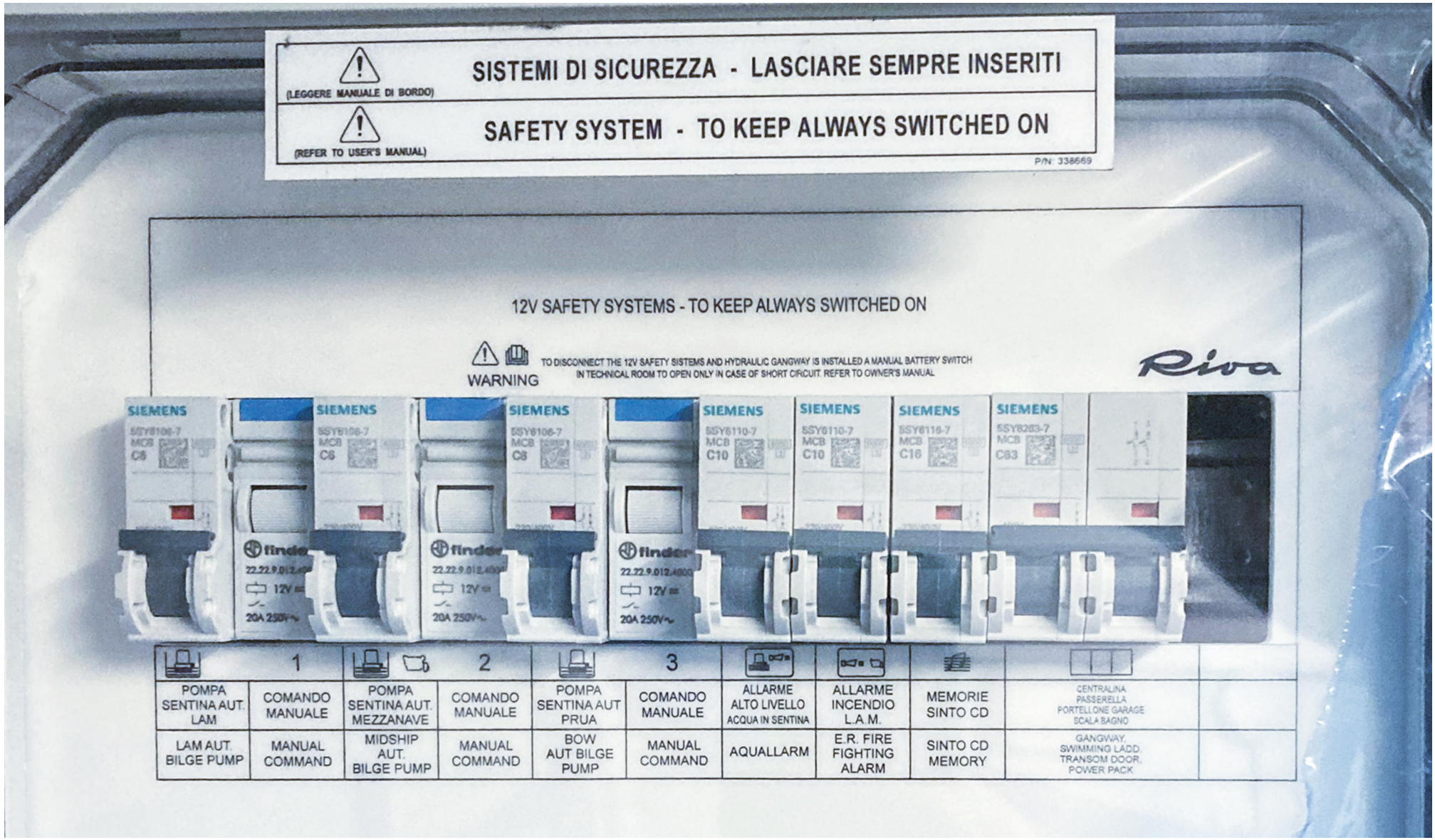
(LEGGERE MANUALE DI BORDO)
SISTEMI DI SICUREZZA - LASCIARE SEMPRE INSERITI
(REFER TO USER'S MANUAL)
SAFETY SYSTEM - TO KEEP ALWAYS SWITCHED ON
P/N: 338669
12V SAFETY SYSTEMS - TO KEEP ALWAYS SWITCHED ON
WARNING
TO DISCONNECT THE 12V SAFETY SISTEMS AND HYDRAULIC GANGWAY IS INSTALLED A MANUAL BATTERY SWITCH IN TECHNICAL ROOM TO OPEN ONLY IN CASE OF SHORT CIRCUIT. REFER TO OWNER'S MANUAL
Riva
SIEMENS
finder
12V
20A 250V
1
2
3
POMPA SENTINA AUT. LAM
COMANDO MANUALE
POMPA SENTINA AUT. MEZZANAVE
COMANDO MANUALE
POMPA SENTINA AUT PRUA
COMANDO MANUALE
ALLARME ALTO LIVELLO ACQUA IN SENTINA
ALLARME INCENDIO L.A.M.
MEMORIE SINTO CD
CENTRALINA PASSERELLA PORTELLONE GARAGE SCALA BAGNO
LAM AUT. BILGE PUMP
MANUAL COMMAND
MIDSHIP AUT. BILGE PUMP
MANUAL COMMAND
BOW AUT BILGE PUMP
MANUAL COMMAND
AQUALLARM
E.R. FIRE FIGHTING ALARM
SINTO CD MEMORY
GANGWAY, SWIMMING LADD. TRANSOM DOOR, POWER PACK

5.1.13 Generator

Your yacht is equipped with a generator set **(1)** (6 kW 50 Hz), operated by a diesel engine, dimensioned to satisfy the power supply requirements suitably planned in the electric balance for various navigation conditions.
The generator is fundamental when 230V equipment must be used while cruising, or when it is not possible to connect to the shore power supply mains.
The generator is located in the engine room, abaft the port propulsion engine, on a basement suitable to sustain its weight and induced vibrations.
The generator is contained in a sound-proof box, made of removable and insulating panels in painted marine aluminium. This solution allows easy access to the engine and to the alternator for maintenance and inspection, and at the same time a remarkable reduction of noise.
The starter generator is via its own independent 12V battery.
At the stern of the generator, is placed its battery breaker.

Aft of the generator is located the key battery switch that allows you to connect or exclude the generator starter battery.

The generator is equipped with an electronic device for automatically recharging the start up battery by means of its own alternator.
The engine is cooled down, through a cupronickel heat exchanger, by sea water sucked through an independent sea water intake **(2)**, located in the technical room and equipped with a cut-OFF valve and an inspectable strainer.

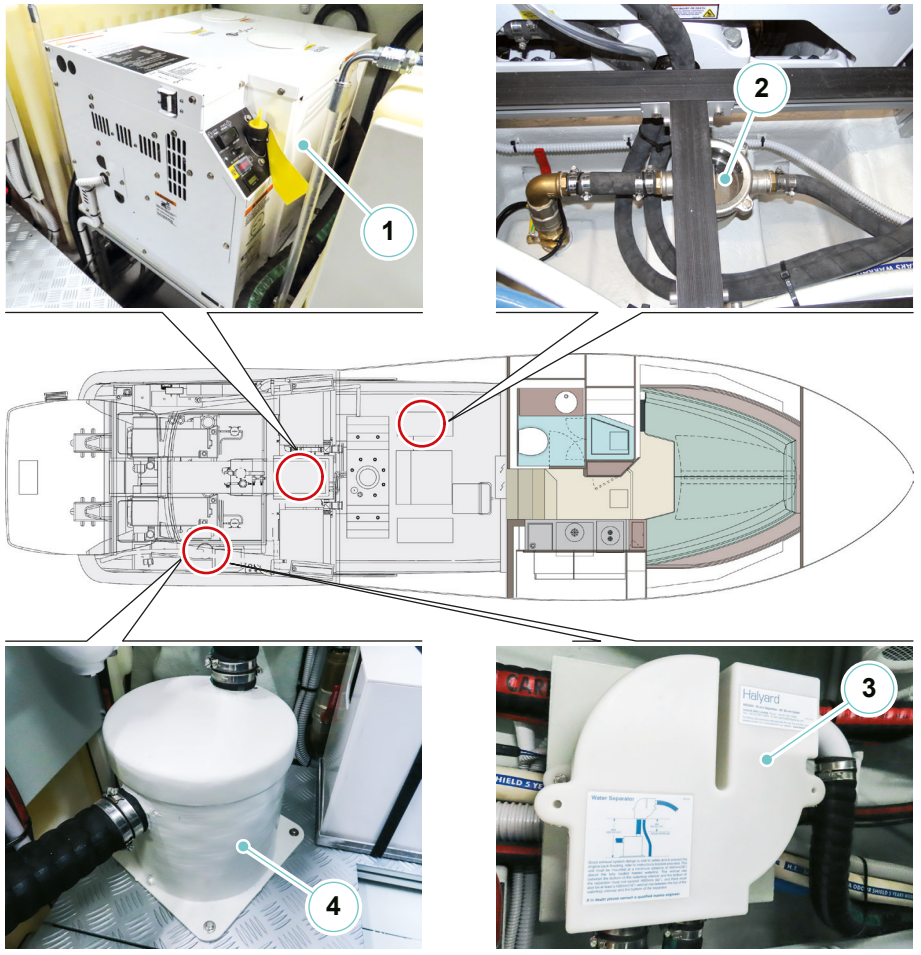

A second heat exchanger cools down the air inside a sound-proof case and the air necessary for the alternator ventilation.
The inspectable sea inlet strainer efficiently protects the cooling circuit from the harmful ingress of mud, sand and algae.
The generator draws the air necessary for combustion directly from the engine room through an opening in the stand; exhaust gases are collected and silenced, through a special muffler and water/fume separator, inside the submersed exhaust of the port propulsion engine.
Besides exhaust gases, cooling water is discharged too. Immediately after the generator exhaust manifold there is the water injection point (raiser), where the mixture of cooling water and exhaust gas is formed.

The generator's exhaust, in addition to reducing the noise, collects the water in the exhaust pipes when the genset engine is switched OFF, preventing it from flowing into the engine through the exhaust manifold.
The water/fume separator **(3)** divides the cooling water from the exhaust gas, discharging them overboards; it also further reduces the noise level, which is already reduced by the muffler **(4).**

The advantage of using this kind of exhaust is a considerable noise reduction, a lower grade of smoke of the exhaust and a reduction of the operating temperature.
The generator's start up battery can be recharged by the special (optional) battery charger installed on the aft bulkhead of the engine room.

The charger can only recharge the battery when the yacht's power supply is connected to the shore.



DANGER

Carbon monoxide poisoning. Start the generator only in a well ventilated area. The carbon monoxide, generated by the inner combustion of engines, is extremely toxic. Explosion/fire hazard.
Check for the presence of fumes in the generator area.

Generator sea water cooling system diagram

LONGITUDINAL VIEW

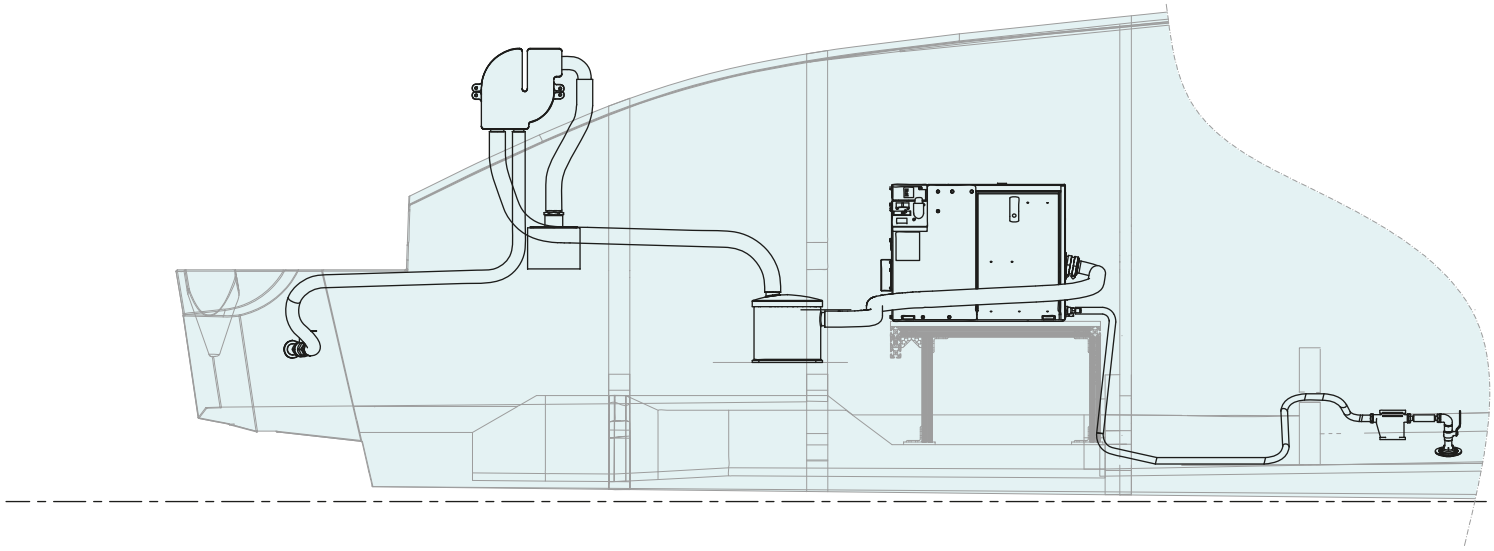

5.1.14 Use of the generator

Before beginning with any start-up procedure, it is extremely important to become “familiar” with the generator set and its controls.

You will also have to carry out an inspection, in order to remove any kind of danger, real or potential.

We therefore recommend you to carefully read the instruction manual supplied by the Manufacturer and, at any rate, to follow indications given.

- Identify the position of the emergency stop buttons, switches and other emergency systems installed on the generator.
- Knowing the specific emergency procedures relevant to the system concerned.
- Check for the correct oil level by means of the relevant dipstick.
- Check that all electric utilities are disconnected, to prevent starting the generator under load.
- Check that the water and fuel pipes are properly connected.
- Make sure that the sea water intake cut-off valve is completely open.

Start up the generator by pressing the START push-button located on the main electrical panel. Release the push-button when the generator is running. Be careful not to exceed 15 seconds continuously per attempt. Allow a break of at least 30 seconds between attempts.

Carry out a new engine running-in cycle as stated by the engine manufacturer. Heat the set engine by running it idle for about 5 minutes after start up, in order to allow the lubricating oil to reach all parts of the engine.

Otherwise, excessive wear of the moving parts may occur. Stop the generator set pressing the STOP push-button located on the main electrical panel.

CAUTION

Repeated start-up attempts with negative result may cause an excessive build-up of water in the draining system, with possible serious consequences for the engine.

CAUTION

Before stopping the generator, it is recommended to let it run for a few minutes with no load, in order to allow the engine and the alternator to gradually cool down.

5.1.15 Generator control panel

On the power generator there is a control panel allowing to carry out the controls and the start/stop operations.
A display indicates, generator status and any detected anomalies, thus allowing the monitoring of the power generator set.

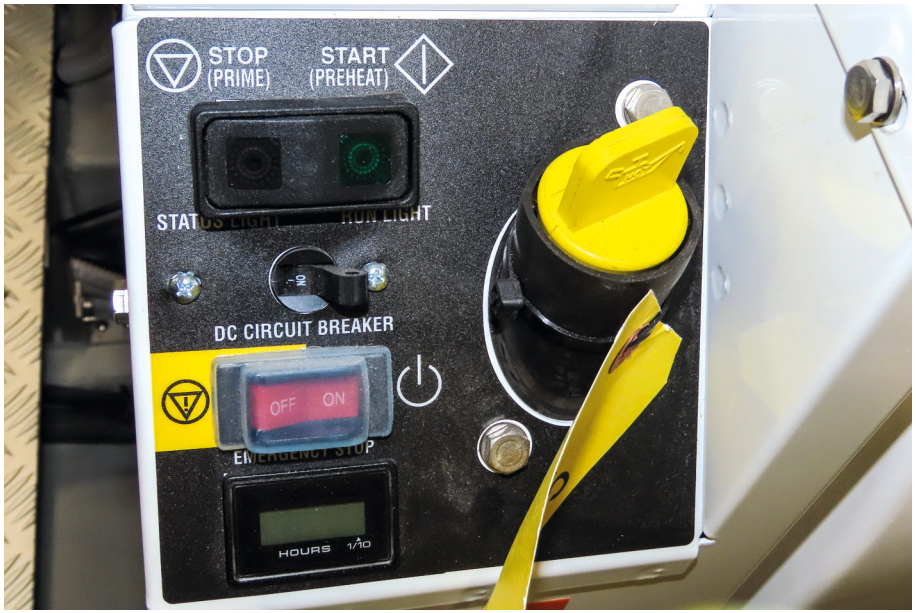

CAUTION

Before stopping the power generator, disconnect the various on-board uses supplied by it; stopping the power generator under load can irreparably damage the electronic control units of the various loads, beyond having a negative influence on the generator's operation.
However, please refer to the manual of the power generator to obtain more detailed information about the starting and stopping procedures.

NOTE

For further information on use and maintenance, please refer to the manufacturer's manual.

5.1.16 Inactivity periods

Start the power generator at least once a month. If the power generator does not need to be used for a long time, it is necessary to proceed with the following operations:

- Change the engine oil.
- Replace the oil filter cartridge.
- Replace the fuel filter cartridge.
- Remove the injectors and insert 2 cc of engine oil into each cylinder, then let the engine run for several revolutions, manually operating on the pulley of the engine shaft. Then reinstall the injectors.
- Replace the sacrificial anodes.
- Disconnect the starting battery and place it in a dry location.
- Disconnect the sea exhaust pipe from the engine manifold.
- Clean the sea water strainer.
- Close the valve of the sea cock.
- Drain the cooling water from the muffler.

5.1.17 Generator maintenance

Component	Maintenance	Notes and precautions
Lubrication system	Oil specifications	Use specified oils according to Manufacturer's indication.
	Oil check	Check the oil level in the stand daily or before each start-up to ensure that the level is in the safe range. Remove the dipstick and wipe the end clean, reinsert as far as possible, and remove. Maintain the oil level between the marks (Min and Max).
	Oil change	For the oil change remove the draining hose from its holder. Position the hose in the oil collecting container. Remove the oil filling plug. Open the oil draining valve located on the engine and drain the oil completely in the container. Change oil according to intervals suggested by the Manufacturer.
	Oil filter change	Remove the oil filter by turning it counter clockwise by means of a suitable wrench. Apply a thin layer of oil to the rubber seal of the new filter. Replace the oil filter according at time intervals recommended by the Manufacturer.
Fuel system	Cleaning and replacement of fuel pre-filter	Replace fuel pre-filter at time intervals recommended by the Manufacturer.
	Cleaning and replacement of fuel filter	Close the fuel supply valve. Loosen the fuel filter by turning it counter clockwise. Remove the filter and clean the contact surface. Tighten the filter on the adapter until the seal comes in contact. Replace fuel filter within the intervals indicated by the Manufacturer.

Component	Maintenance	Notes and precautions
Cooling system	Cleaning / replacement of the air cleaner	Release the two spring clamps and remove the cover of the air intake. Clean the cover and the base with a clean cloth so as to remove the dirt. Refit the filter and the cover at the base of the filter air intake. Replace the filter at time intervals recommended by the Manufacturer.
	Cooling liquid top up	Before filling the cooling system stop the generator and let it cool down. Close the draining taps. In order to discharge the pressure turn slowly the plug clockwise up to the first stop. Remove the plug after the pressure has been completely released.
	Sea water strainer	At least once a week check for the correct water flow through the filters. At least once a month check the integrity of the filters. At least once a month clean the suction filter. At least once every six months check the condition of the cover seal.



ENVIRONMENT

Recover all waste materials (engine oil, fuel, filter, etc..) according to the rules in force concerning the special waste disposal.



DANGER

Hot coolant and steams may cause heavy injuries or death.

CAUTION

Failure to observe the oil specifications may cause inadequate lubrication/oil pressure and cold-starting difficulties.

CAUTION

If the oil level is not positioned between the two reference notches do not activate any device.

CAUTION

Pay special attention to the coolant level. After the coolant drains, completely refill the engine coolant tank. Check the coolant level as prescribed in the Pre-start Checklist.

CAUTION

Sea water damage. Sea water quickly deteriorates metals.
Wipe up sea water on and around the generator set and remove salt deposits from metal surfaces.

CAUTION

Do not add coolant if the engine is still hot. Adding coolant to an hot engine can cause the cylinder block or cylinder head to crack. Wait until the engine has cooled down.

5.1.18 Checking and cleaning the sea water intake strainer

The following operations must be carried out for sea water intake strainer inspection and cleaning.

- Tightly close the sea water intake valve and then slowly open the strainer cover.
- Once removed the cover, remove the filter element; clean it with a brush and rinse it in water.
- Clean the strainer housing.
- Fill the strainer with water to avoid pumps from idle turning, thus damaging the system.
- Check and, if necessary, replace the gasket of the strainer cover.
- Re-position the filter inside the box; close the strainer cover.
- Reopen the cut-off valve and check for leaks from the strainer cover.

CAUTION

Before restarting the generator set, make sure that the cut-OFF valve is completely open.
Before servicing the sea water line, disable the operation of the connected utilities.

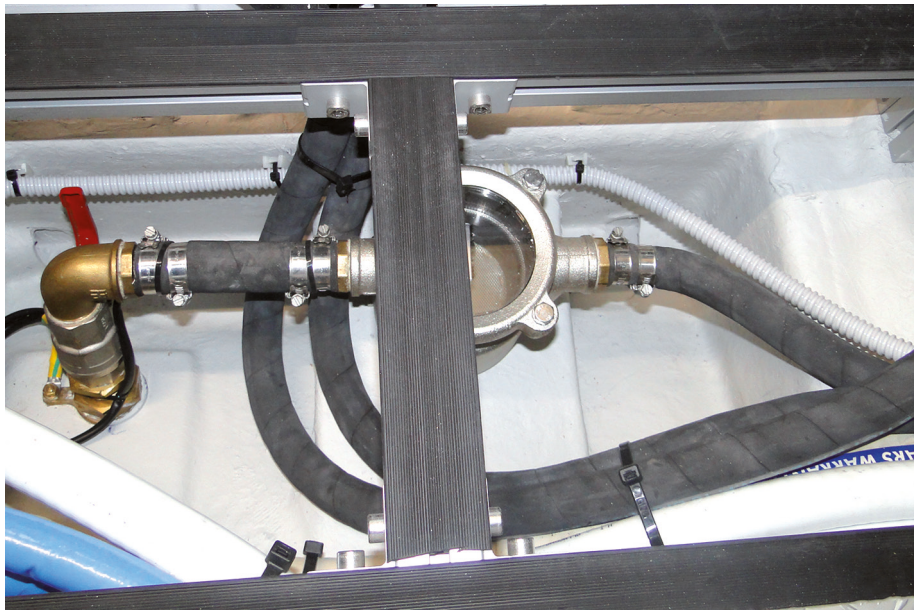

5.2 WATER SYSTEMS

5.2.1 Bilge system

The bilge suction system, manufactured according to ISO 15083 regulations, consists of three 12V diving electropumps, installed in a suitable position for the proper draining of bilges, located as follows:

- **Engine room (n°1)**



- **Technical room (n°1)**



- **Mid yacht: (n°1)**

The suctions of the pumps are equipped with plastic net strainers, whose purpose is to prevent the penetration inside the circuit of foreign bodies, which may damage the pump or cause pipe clogging.

The water sucked from the bilges is sent to the overboard drains located on the yacht's sides. The diving pumps are directly connected to a battery, and thus guarantee bilge drain at any time.
Therefore, it is not necessary to activate the services battery breaker. In order to make them work, it is necessary to activate the relevant magneto-thermals located on the secondary electrical panel in the Technical room.
It is possible to evacuate water from the bilges where the pumps are located either in automatic or manual mode. The pumps' activation, in automatic mode, is controlled by floater switches (**1**) installed in the bilge, which activate the pumps when they detect a too high level of waters. In order to manually start the pumps, press the relevant spring push-buttons located on the helm station, making sure that the magneto-thermal switches are connected. The upper floats (**2**), in the bow and stern areas of the engine room, control the activation of the "Acquallarm" alarm siren which, in the event of flooding, signals a high water level in the bilge.
The submergible bilge pumps are connected directly to the service batteries and can be operated also when the battery breaker is set to OFF, thus ensuring water evacuation even when the yacht is unattended, with the circuit breakers in the secondary electrical panel switched on.
The bilge high water level alarm siren, located in the helm station, is directly connected to the service batteries: therefore, for its operation, it is necessary to activate the special magneto-thermal switch located on the engine room secondary electrical panel.

CAUTION

The system total capacity is not designed for yacht draining in case of leaks.

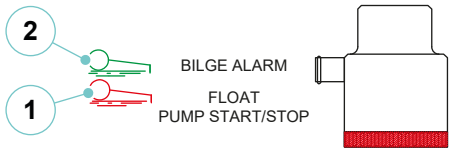

CAUTION

In case of leaks in the engine room, it is possible to suck huge quantities of water from the engine room bilge through the cooling system pumps of each engine.

ENVIRONMENT

Any oil or fuel in the bilge must be collected and stowed.
It is forbidden to discharge bilge water mixed with oil or fuel into the sea, because this causes serious pollution.
During maintenance operations in the engine room, it is compulsory to disconnect the magneto-thermal switches of the bilge pumps' automatic suction system, thus preventing the accidental spillage of liquids and, consequently, sea water pollution.

CAUTION

Avoid leaving rags or other residues which could clog the suction inlets of the pumps, thus causing serious damage to them, even though the inlets are protected by filtering nets.

CAUTION

Check all bilge pump operation at regular intervals. Clean the pump intakes. The hull valves installed in the bow and stern peak walls must be held closed; they must be open only to drain the water from the main bilge.

In case of malfunction of the automatic bilge pumps you can use the manual pump.

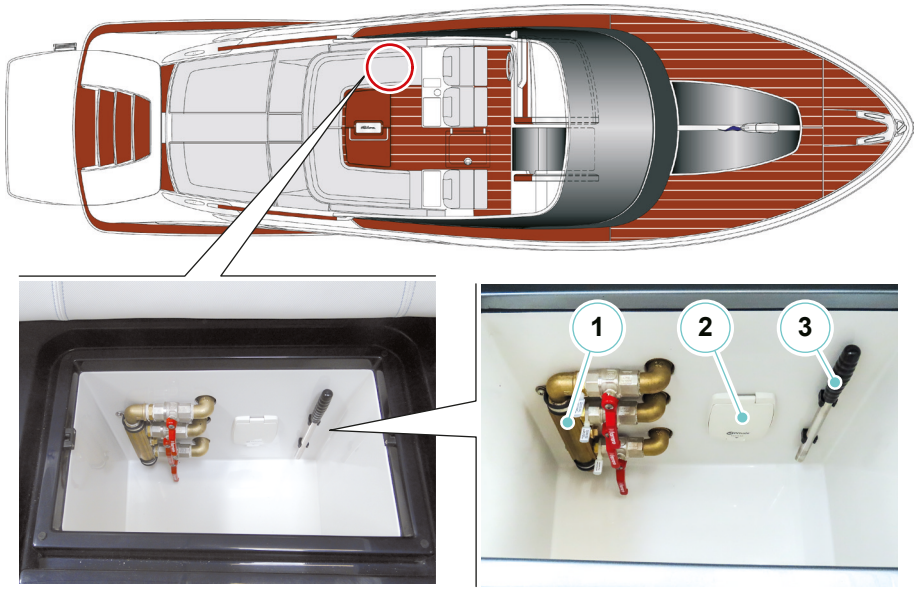

1. Selection area intake manifold
2. Manual bilge pump
3. Manual bilge pump actuation bar

Bilge system diagram

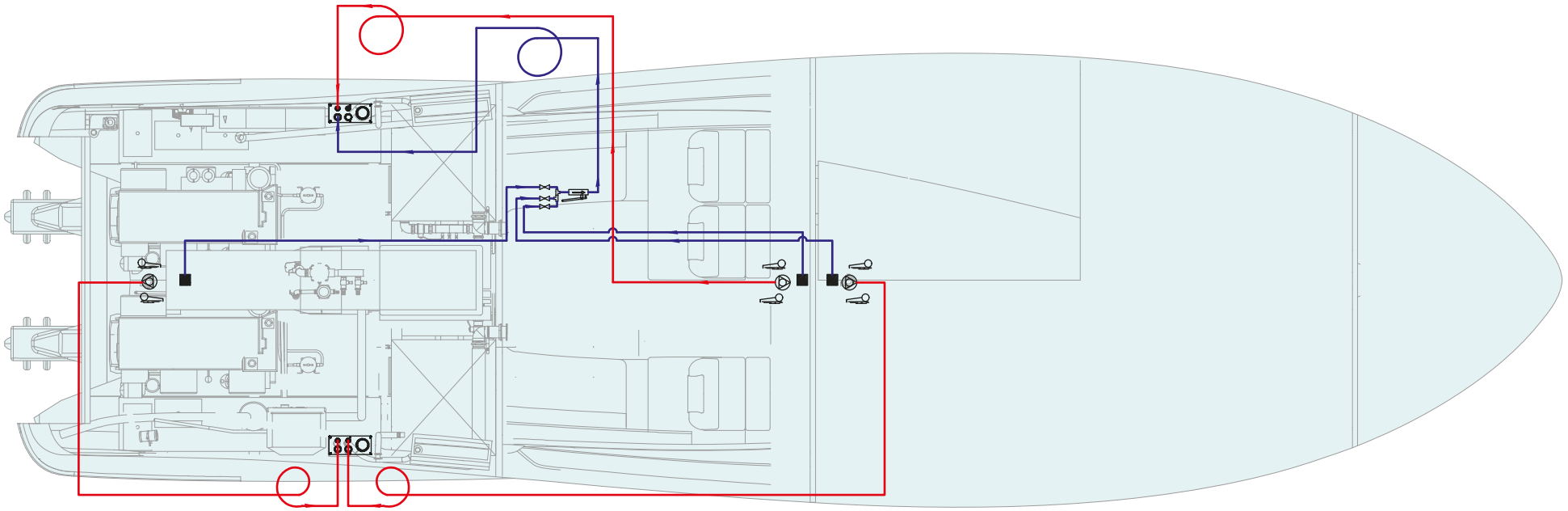


Bilge pump - 12V


Float switch

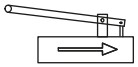
Manual pump


Bilge strainer


Centralized discharge


Ball valve

5.2.2 Bilge system maintenance

Component	Maintenance	Notes and precautions
Bilge pumps	Operation check	Check for the correct operation of the bilge pumps before each navigation. At least every month, check the status and the function of all installed bilge pumps as well as of the related overboard discharge. Pay special attention to not leave any rags or other residue in the bilge, as these may plug the pump intakes, damaging them.
Bilge	Inspection and cleaning	When using detergents or solvents, remember to adequately ventilate the spaces. Protect breathing and the eyes by using a suitable mask, and protect your hands with gloves, when using detergents.
Autoclave pump	Cleaning	Check the cleanliness of the pump suction protection grids.

5.2.3 Bilge pump operation check

This kind of electric pump does not usually need ordinary maintenance, as long as some precautions are taken to extend their good operation.

- Where a freezing danger exists, it is necessary to completely drain the bilge.
- Although the immersion pumps are designed to also work dry, it is advisable to run them under this condition as little as possible.
- Regularly check the efficiency and cleanliness of the different protection strainers.
- If the yacht is to be inoperative for a long period, it is advisable to drain the pump body and clean it.
- Check if the impeller is jammed, this should never occur because it could cause heavy damage to the electric engine; if necessary carry out impeller and pump body descaling by means of proper detergents.



DANGER

Before carrying out any maintenance operation, disconnect the magneto-thermal switches in the engine room so that accidental activation is prevented.

CAUTION

Once the checks on the bilge pumps have been completed, check that the relevant magneto-thermal switches are active again.

The operations to check the functionality of the bilge pumps are as follows:

- Check the operation of each bilge pump at least once a month, filling the bilge with clean water up to the activation of each pump and checking proper overboard pumping;
- Check the operation of each bilge pump: in manual mode, by means of the relevant push-buttons located on the synoptic panel of the main electrical panel in the helm station, or from the secondary electrical panel in the engine room; In automatic mode, by manually lifting the float switches.

CAUTION

Pump and component replacement must be carried out by specialized personnel, using only spare parts.



ENVIRONMENT

The float switches activating the bilge pumps and the alarm siren for “High water level in the bilge” contain mercury, a substance which may cause pollution. Dispose of pursuant to the laws in force.

NOTE

For further information on use and maintenance, please refer to the manufacturer’s manual.

5.2.4 Fresh water system

The water supplying your yacht's fresh water circuit is contained in a tank **(1)** with a capacity of 330 litres (87 gals), located in the aft area of technical room.
The tank is filled via a gravity filling nozzle **(2)**, located in the stern port side, near the mooring cleats.

The plug of the fresh water tank filler is linked to the structure by means of a steel cable which prevents it from getting lost or falling into the sea.

The tank is also equipped with an air vent located beside the filling plug, and with an electronic level switch that transmits the level indications to the special instrument in the helm station.

From the tank, fresh water is sucked by the autoclave pump **(3)**, located in the technical room, through a special suction pipe.

The fresh water pump, protected and supplied by the magneto-thermal switch located on the main electrical panel, 24V uses section, guarantees the continuous presence of fresh water in the system by a check valve.

In case of technical problems, see instruction manual of the pumps group or contact to the Service Department.

When the yacht is left unused, for long periods of inactivity or winter storage, we recommend keeping a concentrated quantity of disinfectant inside the tank, and then to drain the tank by opening all uses.

This will enable a disinfection of the whole system, preventing the formation of bacteria in the system.

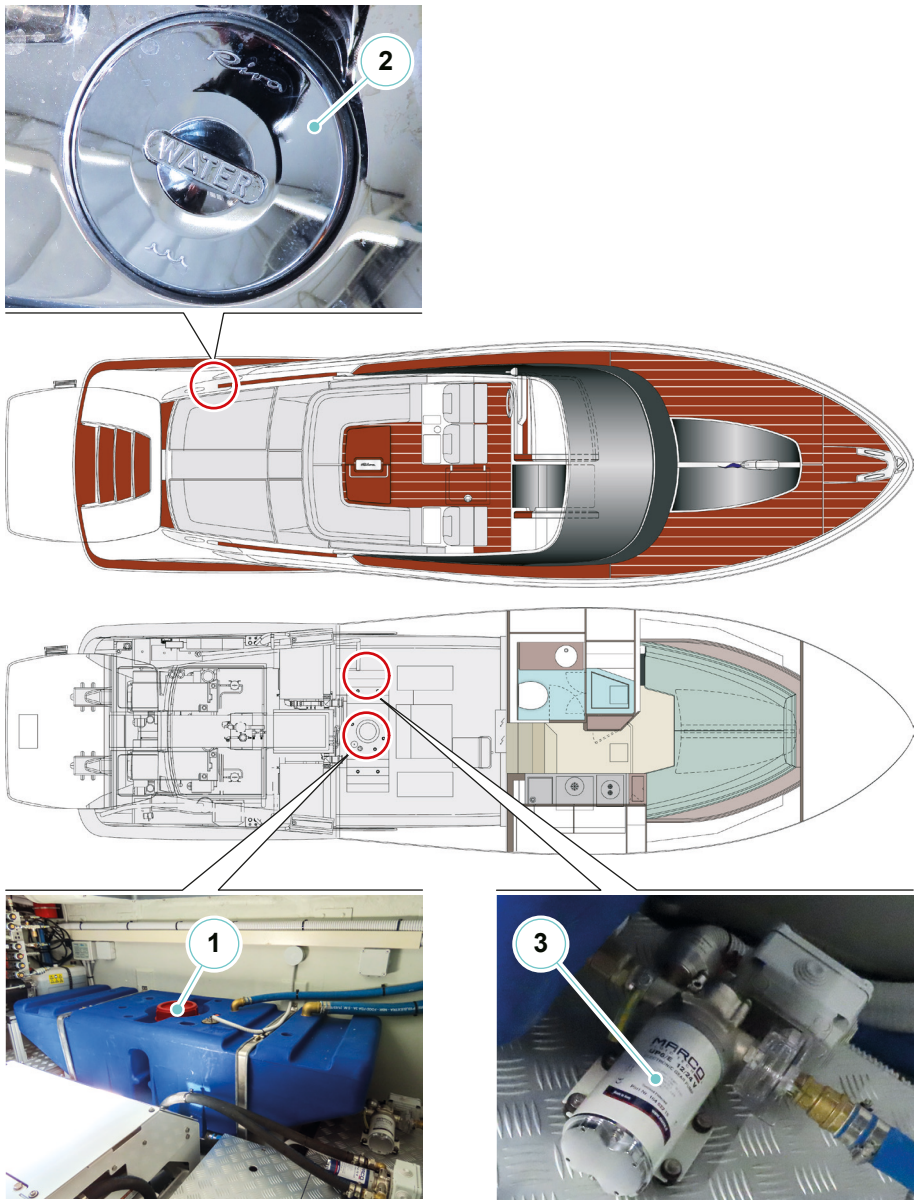

CAUTION

We recommend taking care of the tank's hygiene, by pouring a disinfectant solution every two fillings.
The filling nozzle cap is marked "WATER" to prevent the accidental intrusion of different liquids.
To avoid damage to the system and tanks, we recommend filling by gravity and not by pressure.

5.2.5 Cold water system

The pump draws the cold water from the fresh water tank and sends it to the following uses:

- Shower on stern platform;
- Bathroom services;
- Galley;
- Water heater;
- WC system;
- Chain wash.

If the yacht is moored in a marina that includes running water service, the equipment can be supplied without using the yacht's autoclave by means of the pressure from the shore system.
The connection with shore running water occurs through the water connection located inside the peak on the starboard side of the swim platform access stair's step.

A pressure reducer, located in the engine room, protects the yacht's water system against harmful pressure variations.

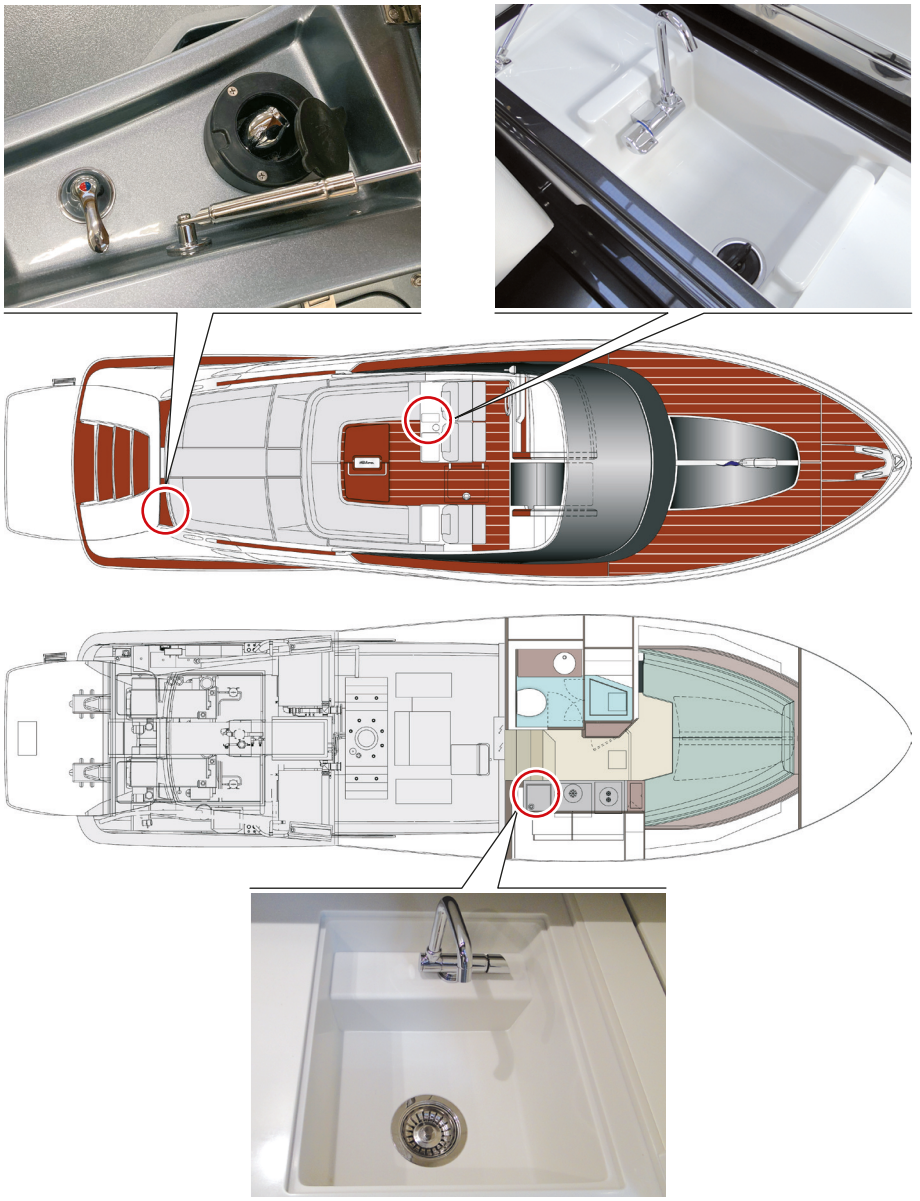

The fresh cold water reaches all utilities through the distribution manifolds, provided with check valves in order to enable the sectioning of the system in case of failure or maintenance. The distribution manifolds are located in the engine room, in the utility room and below the bathrooms' dunnages.

CAUTION

Regularly inspect the fresh water and bilge circuits for leaks.
Repair any leaks by releasing the pressure in the system, in order to avoid damaging the furniture and the electrical equipment.
The fresh water circuit, and particularly the tank, must be sanitized periodically by pouring a specific disinfectant solution into the filler.

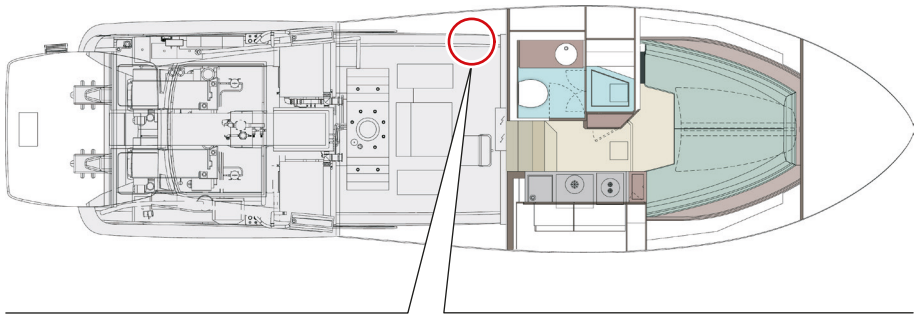



5.2.6 Hot water system

The autoclave pump draws the cold water from the fresh water tank and sends it to the electric water heater, located on the starboard side in the technical room.

The water inside the water heater is heated and then reaches the following utilities:

- Shower on stern platform;
- Bathroom services;
- Galley.

The fresh cold water reaches all uses through the distribution manifolds, provided with check valves in order to enable the sectioning of the system in case of failure or maintenance.
The water heater is supplied at 230V delivered either by the generator or by the shore power supply; in order to activate the water heater, operate the magneto-thermal switch located on the main electrical panel.

The water heater's inlet and outlet water ducts are equipped with ball cut-OFF valves.
The inlet duct is provided with a check valve which prevents hot water back flow inside the circuit.
This valve shall be checked and replaced according to the indications given by the manufacturer.
The easily accessible distribution manifolds are located in the technical room and below the bathrooms' dunnages.

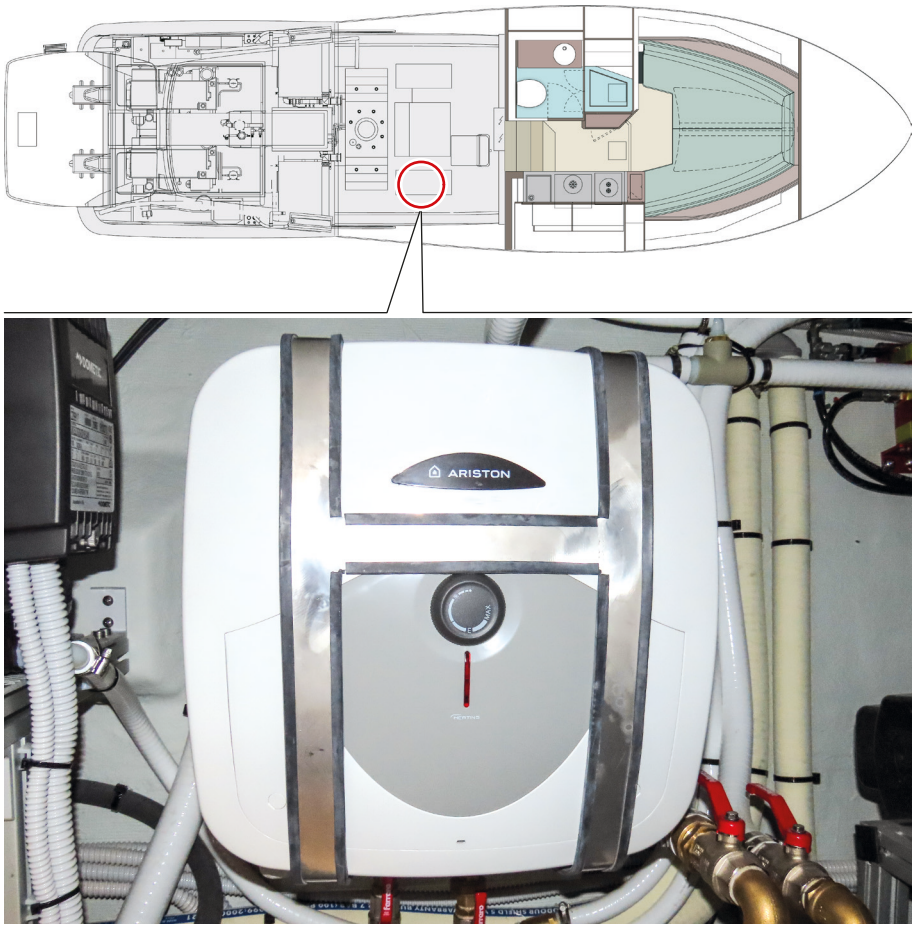

NOTE
For further information on use and maintenance, please refer to the manufacturer's manual.

NOTE
The water heater is not an accumulator: wait that goes up to temperature.

Fresh water system diagram

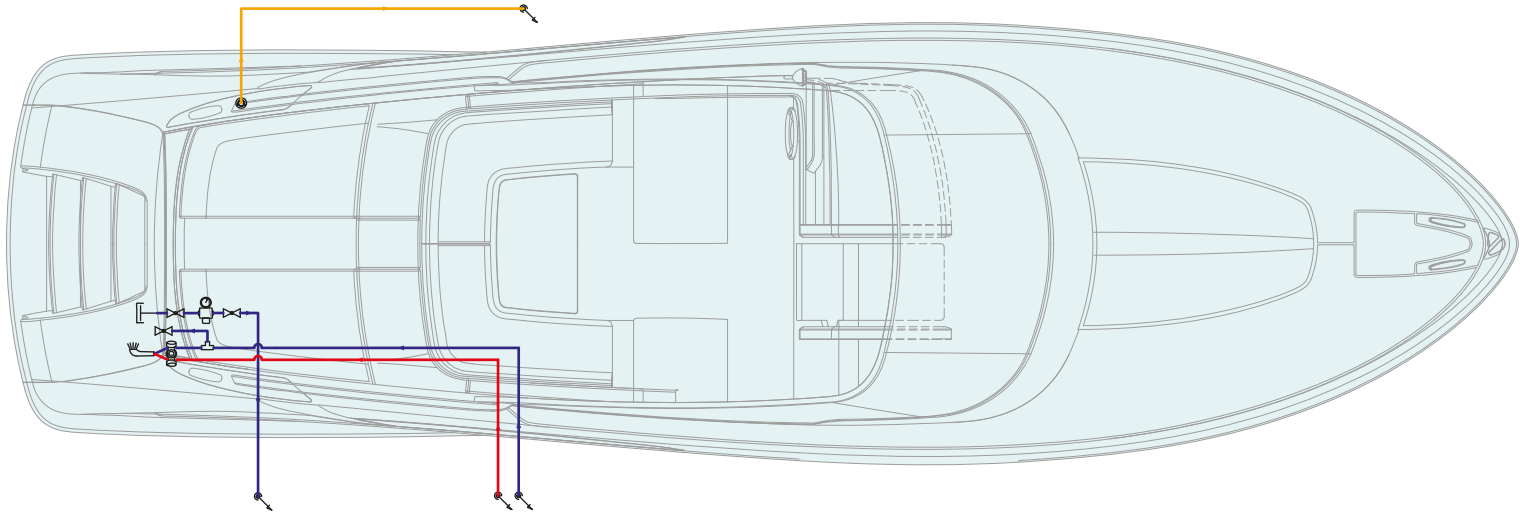

- Ball valve
- Electro valve for wipers
- Pressure reducing valve
- Filling cap
- Connection to upper level
- Connection to lower level
- Electro valve
- Ball valve three-way
- Fresh water tank
- Centralized drain
- Electro pump with security pressure switch
- Non-return valve
- Two-way manifold with gate valve
- Three-way manifold with gate valve
- Vertical water heater
- Stern shower / mixer
- Cold fresh water system line
- Hot fresh water system line
- WC fresh water line
- Air vent line
- Fresh water tank filling line
- Fresh water suction line

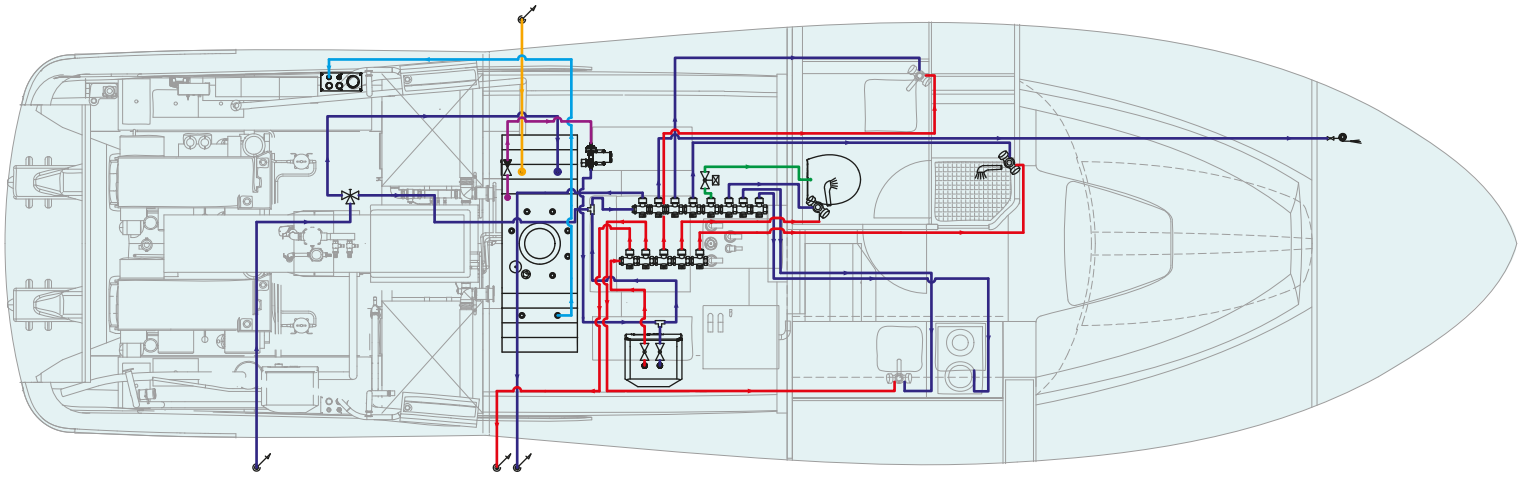

Ball valve	Fresh water tank
Electro valve for wipers	Centralized drain
Pressure reducing valve	Electro pump with security pressure switch
Filling cap	Non-return valve
Connection to upper level	Two-way manifold with gate valve
Connection to lower level	Three-way manifold with gate valve
Electro valve	Vertical water heater
Ball valve three-way	Stern shower / mixer

- Cold fresh water system line
- Hot fresh water system line
- WC fresh water line
- Air vent line
- Fresh water tank filling line
- Fresh water suction line

5.2.7 Fresh water system maintenance

Component	Maintenance	Notes and precautions
Fresh water tank	Checks and cleaning	At least every month, drain the fresh water tank completely and rinse it a couple of times with clean fresh water. This in order to completely change the water stored and at the same time to wash the tank too. Periodically pour a specific disinfectant, in the quantity recommended by the Manufacturer, into the tank, through the intake filler, in order to prevent the formation of bacteria in the system.
Autoclave pump	Checks	Regularly check for leaks. Before carrying out any operation on the pump, prevent its accidental activation. Check daily that the expansion tank located downstream the electric pump shows the correct pressure in the air cushion. The correct tank pressure must be within a range of 1.2 bar min and 2.4 bar max.
Fresh water system	Checks	In case of need or of maintenance, by acting on the valves installed on the distribution manifolds, it is possible to cut out parts of the system or single services, without involving the operation of the general system. Check if along the hydraulic circuit, where possible, are present leaks due to the damage of piping.
Water heater	Checks and cleaning Descaling the resistor Magnesium sacrificial anode	To obtain a good performance from the system, it is advisable to descale the resistor about every two years, according to the indications given by the Manufacturer. To obtain a good performance from the system, it is advisable to descale the resistor about every two years, according to the indications given by the Manufacturer. Replace the possible magnesium sacrificial anode every two years, according to the indications given.

5.2.8 Air bleeding

If the water tank empties, the fresh water circuit pump permanently starts, sucking air.
In this case, it must be switched off immediately from the control panel, in order to prevent the pump from burning out due to the prolonged empty operation. In the situation of an almost empty tank, it is advisable to deactivate the autoclave beforehand.
This situation is signalled by the noise of the pump, that continuously runs even if the taps are closed. In this case, bleed the air proceeding as follows:

1. Disable the pump from the electrical panel.
2. Fill the tank.
3. Open a tap.
4. Activate the pump from the electrical panel.
5. Let the water flow until the air has escaped.
6. Close the tap.
7. Make sure that the pump has reached the operating pressure and that it does not restart.

NOTE

The fresh water pump is self-priming but, to operate, it needs that its body is filled with liquid.
For a correct use, we recommend at first priming or after a long idling period, to fill the pump body with liquid, to check the pressure inside the tank (it must have the same value of the min. pressure indicated by the pressure switch) and to verify the clockwise rotation of the pump (seen from the engine side).
Besides, if on the main electrical panel the pump operating led always remains lit, but the slaved services are not being used, check if the pump body is empty.
When the yacht is not operated for long periods of time the pump should be drained by means of relevant magneto-thermal switch.

Component	Maintenance	Notes e precautions
Autoclave pump	Checks and cleaning	Regularly check that fittings are tightly closed and free from corrosion. Check the conditions and the cleanliness of the pump and of the expansion tank; if necessary, clean with well diluted detergent and dry accurately (see specific Manual). Replace the impeller, the mechanical seal, the tank membrane and engine brushes of the pump according to the manufacturer’s instructions and frequency.

5.2.9 Grey water system

The grey discharge water is collected inside the plastic tank (**1**) located in the technical room.
The tank collects the discharge water from sinks and shower of Owner's and crew bathrooms; it also collects the condense water of the air conditioning system fan-coil. The tank, not being airtight, does not need any air vent.
The pump power supply magneto-thermal switch is located on the main control panel, together with a warning light that signals its operation.

The pump is automatically controlled by an electronic level switch installed inside the tank. The grey water pump (**2**) starts when the sensor detects a high water level and deactivates once the water level has lowered. The system is equipped with a timer which delays useless pump start ups due to yacht's roll.
The galley's basin discharges directly overboard, without any pump, through the outboard discharge located below the basin itself. The cockpit's sink and ice-maker also discharge directly overboard, on the port side.
The system is approved for navigation on Swiss lakes and is equipped with a gray water collection system also to the galley sink and the cockpit (which normally discharging directly overboard).

The system is equipped with suitable solenoid valves that interlace the taps, in case the collection box is full. The system is provided with a system that allows the suction of gray water from the platform. The suction takes place through the nozzle positioned on the stern platform, which allows the discharge of gray waters by means of suitable shore equipment.

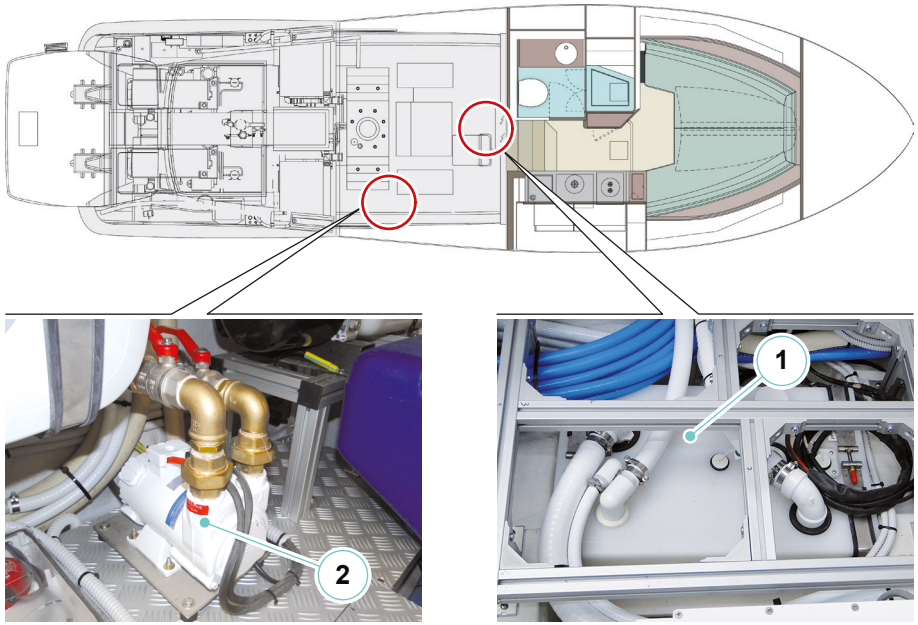

ENVIRONMENT

According to the regulations in force for navigation on Swiss lakes, grey water must be discharged exclusively by suction from the shore, through a special outlet, after activating the three way valve located in the technical room, following the instructions on the special label.

Grey water system diagram

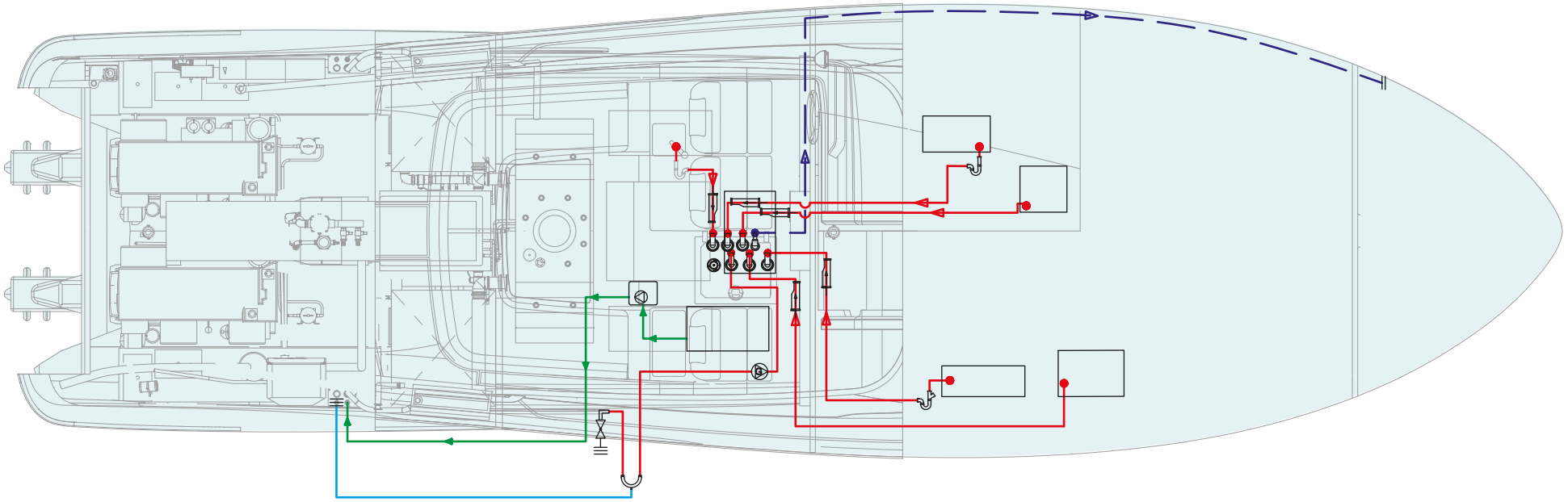

Air vent

Ball valve

Fan coil

Toilet sink siphon

Overboard discharge

Grey pump

Tank with 24V pump and float switch for automatic emptying

Centralized overboard discharge

Galley sink siphon

Antiodors siphon

5.2.10 Grey water system maintenance

Component	Maintenance	Notes and precautions
Grey water tank	Cleaning	At least every month, drain the grey water tanks completely and rinse them a couple of times with clean fresh water. Periodically pour a specific disinfectant, in the quantity recommended by the Manufacturer, into the drains of sink, bidets and showers, in order to prevent the formation of bacteria in the system, and the consequent release of bad smells.
Grey water draining pump	Operation check	At least every month, check the status and the operation of the grey water pump, as well as its overboard drain.

5.2.11 Black water system

The black water system installed on board the yacht mainly consists in a black water holding tank (**1**) with a capacity of 38 litres (10 gals).

The black water collection tank, made of plastic, is located in the starboard side of the technical room.

The tank collects the black water drained by the Owner's toilet.
The airtight tank's air vent is located inside the chain locker.

Before being discharged overboard, the vented air flows through a special active carbon filter which eliminates bad smells.

The tank is equipped with a level switch which starts the discharge pump when it detects a high black water level, and deactivates it once the level has decreased.
The system is equipped with a timer which delays useless pump start ups due to yacht's roll.

The level switch measures the water level inside the tank and sends alarm signals to the main electrical panel and to the toilet control pushbutton panels.

The electric toilet system is supplied and protected by the magneto-thermal switch located on the main electrical panel; it must be activated in order to allow toilet operation.

Black water drain in automatic mode takes place only after the activation of the corresponding magneto-thermal switch on the main electrical panel; it is possible to drain black water manually or automatically, by pressing the selector switch on the main electrical panel. We recommend always checking the warning lights on the toilet ceiling lights and on the main electrical panel, and anyway, draining the tank before entering the harbour, to prevent being forced to return to open sea again to carry out its draining.

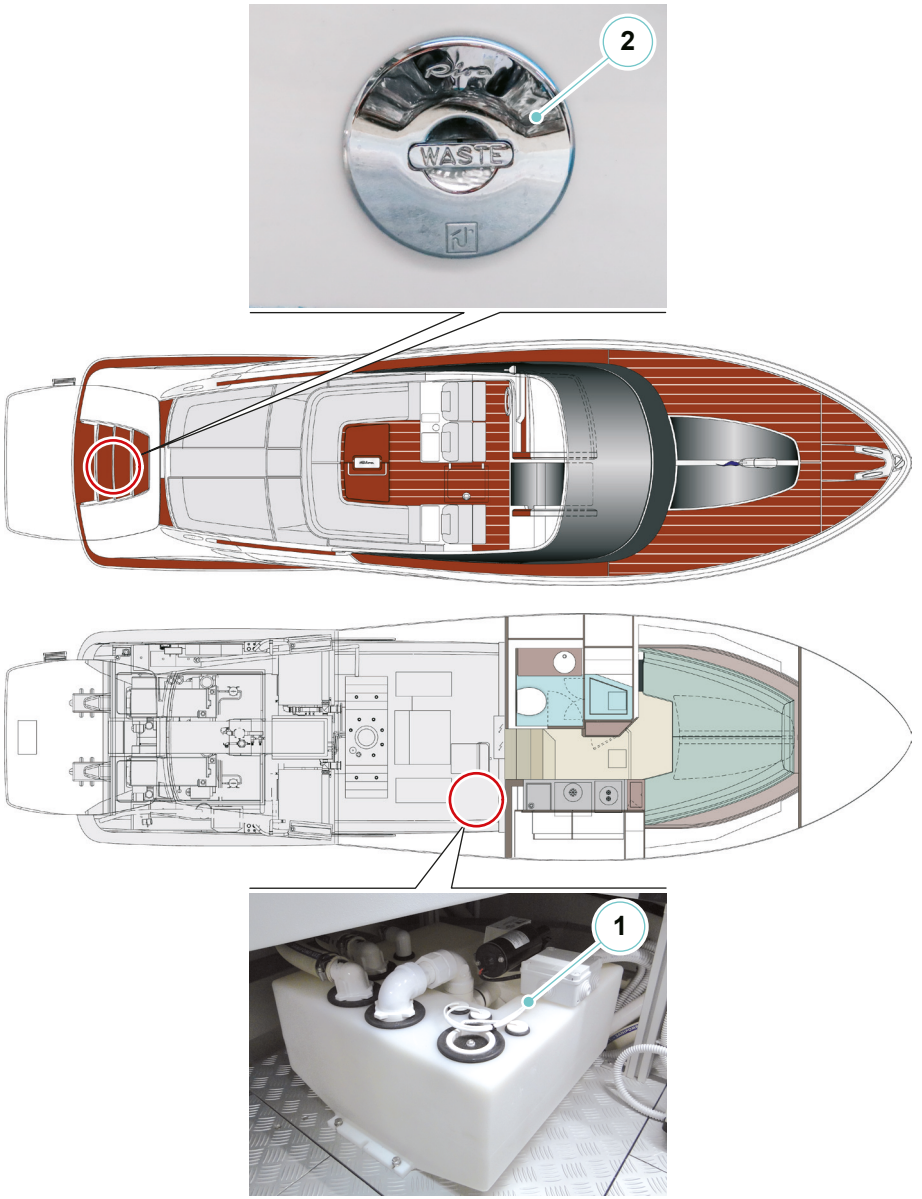

CAUTION

In case of yacht sinking risk, close the ball valve of the overboard drain.

ENVIRONMENT

For all leisure crafts, drain at sea of on-board toilets is forbidden inside harbours, landings and moorings dedicated to crafts' anchor riding, and also within the limit of beaches visited by swimmers, as stated in the single decrees of the Port Authorities.

ENVIRONMENT

All pleasure yachts classified for a number of passengers exceeding the 15 units and equipped with toilets can drain the untreated sewage at sea according to MARPOL rules, only BEYOND the limit of 12 (twelve) miles from the coast, while navigating at fixed track and at the maximum speed allowed, anyway not lower than 4 knots.

ENVIRONMENT

As it is possible to automatically empty the tank, we recommend that, according to the environmental rules in force, once entered in the harbour, you set the activation of the black water pump to manual mode only.
The direct overboard drain of the toilet is regulated by the rules in force in the area where the yacht is navigating.
When heading for the harbour, check the tank level and, if necessary, drain the tank at open sea before entering the harbour, always carefully taking into consideration the yacht's position.
Except for organic waste, only very thin toilet paper can be discharged into the sea toilets.

The black water system is equipped with a water suction system from the main deck, without using the overboard discharge pump.

Suction occurs through the special opening, located inside the aft peak allows discharging black water (**2**) by means of the suitable equipment available in the harbour.

CAUTION

The suction outlet, located inside the aft peak, is labelled with a "WASTE" indication, in order to avoid the accidental penetration of liquids such as water or fuel.

Black water system diagram

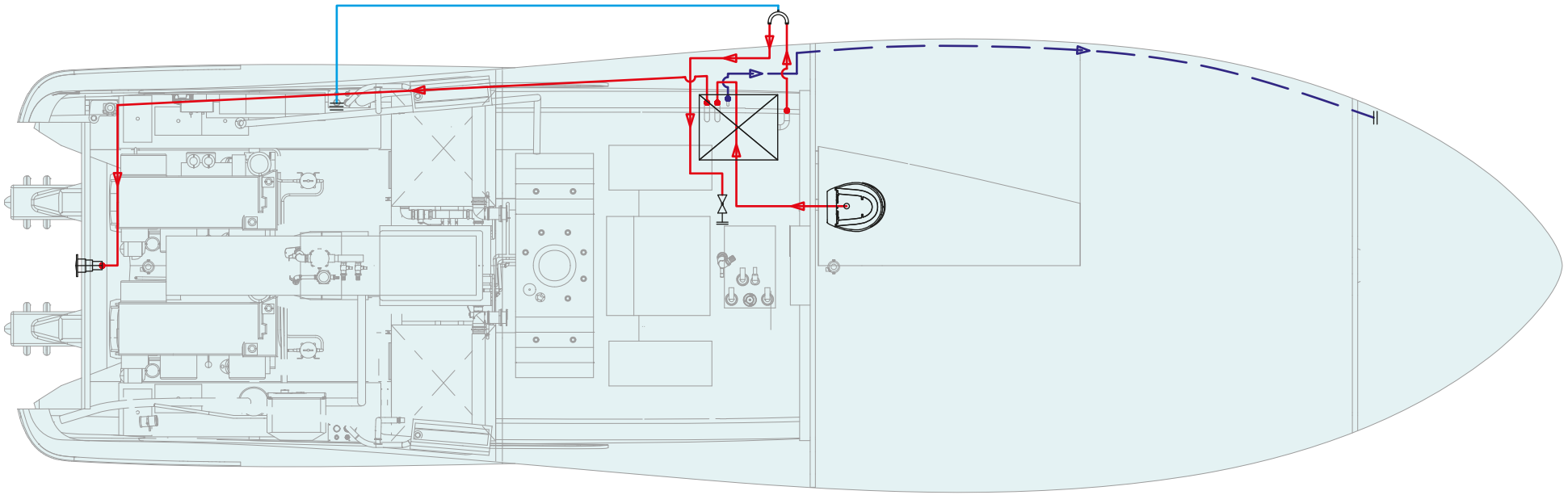

Air vent

Ball valve

Siphonbreak

Drain plug

Overboard discharge

5.2.12 Scuppers system

The scupper system, by means of appropriate holes and drains, allows the quick outboard flow of rain water, marine water or of other nature water, that may fall on main deck or on the sun-deck.
All waters collected by the scuppers are conveyed by means of manifold tubes, placed along the bulwarks.

The total or partial clogging of one or of more scuppers must absolutely be prevented, because it is a cause of flooding and consequent loss of stability by the yacht and its structures.

CAUTION
Always check the correct water flow towards the scuppers.
The partial or total clogging of one or more scuppers is a possible cause of damage for the yacht structure and of loss of stability.

CAUTION
Avoid that incorrectly stowed objects clog the scuppers.

Scuppers system diagram

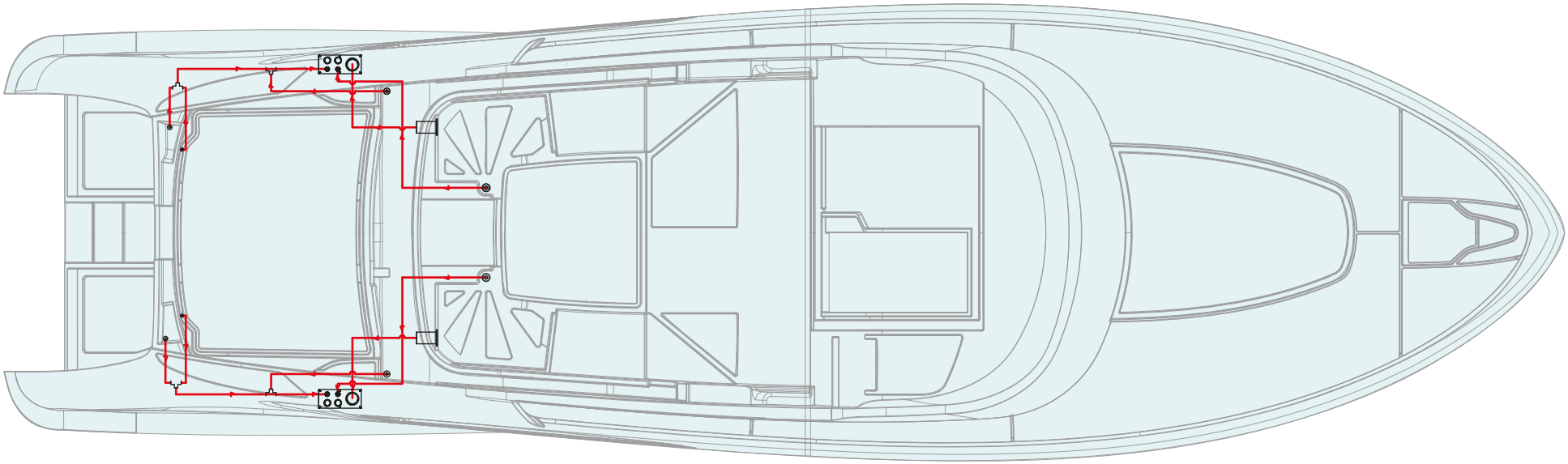

5.3 WC TOUCH PANEL

5.3.1 Use

Moving your hand toward the wall switch, you will activate the usage indication: the touch panel will suggest you which button you should use blinking the relative icon.
This important innovative solution combine absolutely for the first time the advantage to have a two switches operating toilet and a very simple use for the guest, together with a very clean and elegant design.



Cleaning mode (temporary lock-out)
In order to avoid the accidental activation of the toilet while cleaning the glass, it's possible to temporarily deactivate the TOUCH panel.
- Touch and keep one of the buttons for 5 sec.
- All the backlight will be turned OFF for 30 sec.
- After 30 sec. the touch panel's lights will turn ON and will be operative.

Night courtesy light
The touch panel includes a night courtesy light.
Thanks to this feature, you can have a gentle blue illumination in the bathroom sufficient to avoid to turn ON the main light, that could be perceived as an interruption of the natural sleeping phase.
This function could be disabled, enabled permanently or in dynamic mode.

5.3.2 Setting of the courtesy light

Permanent activation of the night courtesy light
In addition to the icons, the border of the panel could be permanently illuminated as night courtesy light.
To turn the night light ON or OFF, press and hold one of the buttons:
- After 5 sec. the panel is switched OFF. Keep touching.
- After additional 5 sec. the border backlight will flash and the new setting is recorded.

NOTE
If the Touch panel is not used for 10 hours, the border backlight will be turned OFF until next use (only if it has been set ON).

Dynamic activation of the night courtesy light
The night light can be switched on temporarily, only when necessary.
When this function is active, the border backlight will remain normally OFF.
Moving your hand over the panel, the night courtesy light will be activated for 2 minutes.

To activate or deactivate this function, press and hold on the buttons:

- After 5 sec. all the backlight will be turned OFF. Keep touching.
- After additional 5 sec. the border backlight will flash. Keep touching.
- After additional 20 sec. the border backlight will flash and the new setting is recorded.

CAUTION

We suggest not to use the residential function of the toilet, as the water inside the toilet could splash out and wet the floor due to the yacht's rolling.

CAUTION

Except for organic waste, only very thin toilet paper can be discharged into the sea toilets. Paper towels or napkins and sanitary towels can clog and damage the sanitary system.

CAUTION

Make sure that toilet are electrically powered and that the black water system is operating before using them.

CAUTION

Except for organic waste, only very thin toilet paper can be discharged into the sea toilets. Paper towels or napkins and sanitary towels can clog and damage the sanitary system.

CAUTION

The disabling of WC protection can cause the tank's overfilling.

CAUTION

The toilet outboard discharge valve must be closed when the yacht is not in use for long periods of time.

5.3.3 Black water system maintenance

Component	Maintenance	Notes and precautions
Black water tank	Checks and cleaning	At least every month, drain the black water tank completely and rinse it a couple of times with clean fresh water. Periodically pour a specific disinfectant, in the quantity recommended by the Manufacturer, into the tank, through the toilet drains, in order to prevent the formation of bacteria in the system, and the consequent release of bad smells.
Black water draining pump	Checks and cleaning	For any operation on the black water draining pump, please address to the Manufacturer.
Solenoid valve for WC drain	Filter	Just before each solenoid valve there is an extractable filter, which retains impurities and must be cleaned at least once a month.

5.4 AIR CONDITIONING SYSTEM

The air conditioning system **(1)** installed on your engine yacht has a very high efficiency and comfort standard.
In fact, the accurate analysis of the yacht's internal rooms and the choice of the best equipment suitable to be installed aboard a yacht, have made it possible to manufacture a comfortable and quiet air conditioning system.
Air conditioning includes cooling and dehumidification in summer (summer cycle), heating in winter (winter cycle) and air purification, circulation and ventilation in every season. The yacht is provided with a fresh water circulation system (treated water), using a refrigerator (Frosty) with heat pump (with sea water condensation), which allows adequate air conditioning of the lower deck.

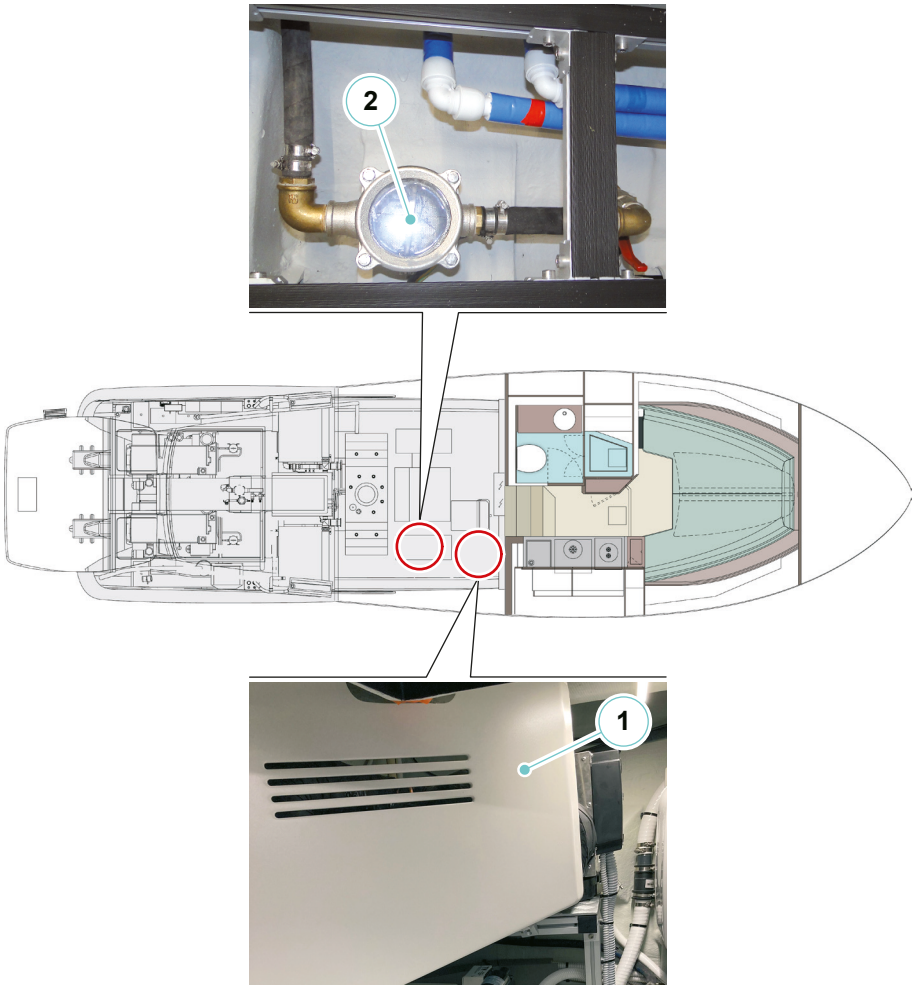

CAUTION

Clarity of the operating principle is extremely important for correct management and maintenance of the system, for locating faults and keeping the system fully efficient.

CAUTION

Before each starting of the system, make sure that the sea water intake valve **(2)** is open and check the cleanliness of the filter.

NOTE

For further information on use and maintenance, please refer to the manufacturer's manual.

Air conditioning system diagram

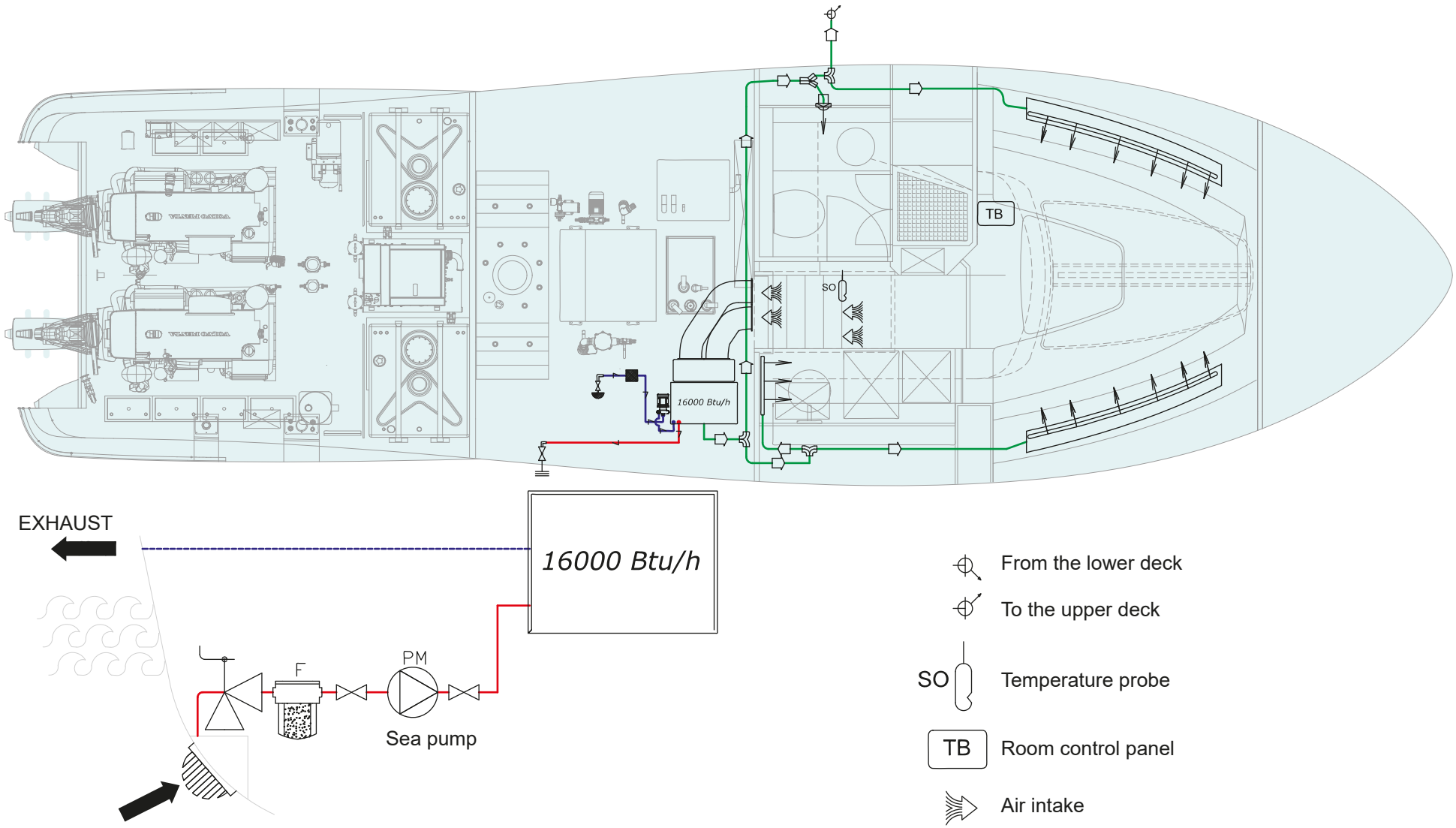

5.4.1 Air conditioning system maintenance

Component	Maintenance	Notes and precautions
System circuit	Check and cleaning	Periodically check, where possible, that the condensate drains of each frosty are free to drain the condensate water. Regularly check, where possible, that the insulation of the system circuit is intact and in good condition.
Fan-coils	Filter cleaning and replacement	At least 2 or 3 times a year, access the internal exchangers of each fan-coil and clean them carefully by vacuum cleaning, paying special attention not to damage the thin exchanger foils. Replace the suction filter when necessary.
Sea cock	Filter cleaning and inspection	Cleaning the sea cock strainer is to be carried out according to how often the system is used and to the pollution conditions of the intake waters (seaweed, mucilage, etc..); in any case, at least once a month. Before cleaning the strainer, remember to close the sea cock cut-off valve and then proceed with cleaning. Once this operation is finished, remember to re-open the valve. Slowly open the filter cover, to make sure the sea water intake valve is properly closed.
	Sea cock cleaning	This operation has to be carried out from the outside, therefore the yacht must be in a dry shore or you can ask the intervention of a diver. If the yacht is in the water, before working on the sea cocks, disable the start up of the engines, the generators and the sea water pumps.

5.5 INTERCEPTORS SYSTEM

To improve the yacht's performance during navigation, it is advisable to correct or seek out the best longitudinal trim at various speeds.
For this purpose they have been installed on the transom two hydraulic interceptor **(1),** one on the starboard and one on the port side for variation both longitudinal and transverse alignment.
The controls are integrated into the main engines throttle with ATCS (automatic trim control system).
In the engine room, they are located on the control units **(2)** with built-in oil tank.

In principle, lowering and raising the interceptors is obtained, respectively a lowering and a raising of the yacht's bow.
Correct positioning of the interceptors results in a stable and ideal set-up that can increase speed while reducing fuel consumption.
In particular navigation conditions, when the effect of lateral forces of the sea, sea currents and wind, the yacht assumes a tilted position, to restore the normal conditions keeping the route, it is necessary to act on the steering wheel or with the use staggered the interceptors.

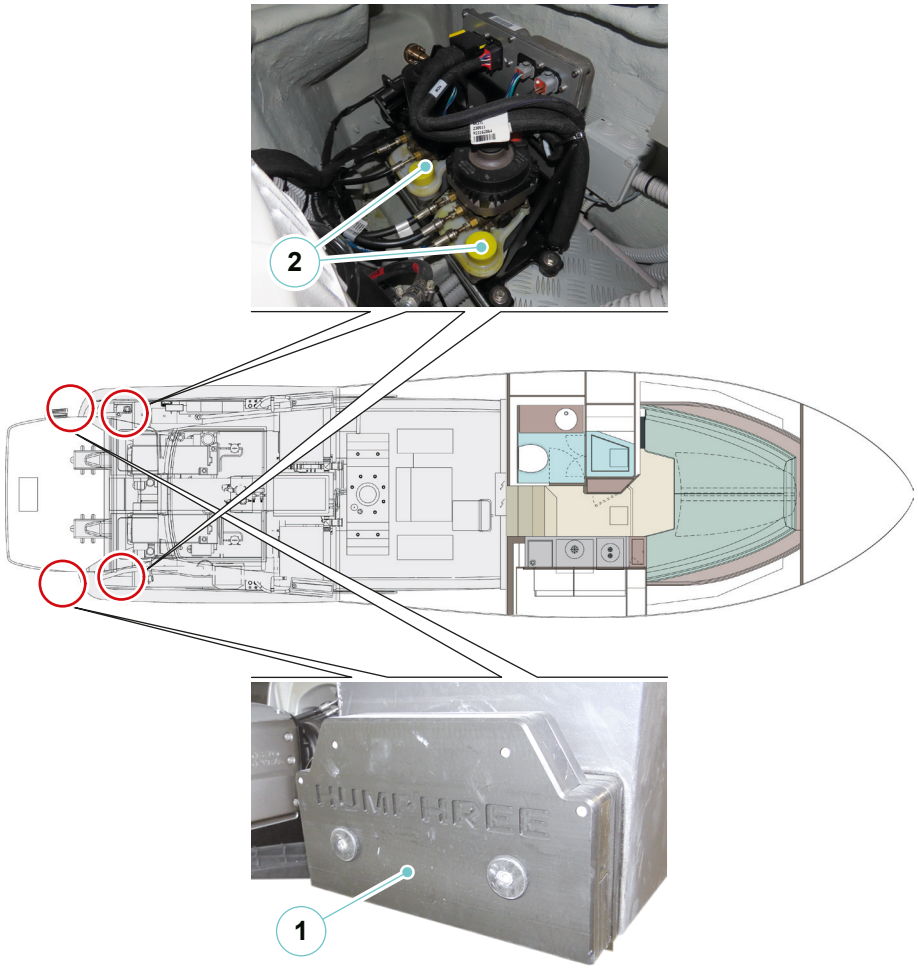

CAUTION
Interceptor are normally used during cruising, both to make it more comfortable and to achieve better performance of the yacht, according to the sea and navigation condition, and the yacht loading.

CAUTION
When using reverse gear, set the interceptors fully up, otherwise they may be damaged.

5.5.1 Advice on interceptors operation

Some advice will prove useful to familiarize with the interceptors.

- After the hull is brought in gliding way position, adjust flap position to find the most favourable angle for navigation.
- At high speed it is advisable not to operate the interceptors at the same time, one up and one down, but carry out these operations separately to avoid sudden lurching; it is nevertheless possible to operate them together in the same direction.
- With calm sea, the best interceptors position is the one allowing maximum speed with minimum yacht resistance.
- With rough sea “at bow”, lowered interceptor will allow the yacht to bump less and to navigate more comfortably even if speed will be decreased.
- With rough sea “at stern”, lifted interceptors will raise the bow thus avoiding unpleasant listing.
- With side wave motion or asymmetrical side load, the best stability is obtained with staggered interceptors.
- In case the yacht is not underway, raise the interceptors completely (withdrawn rams).

CAUTION

The Interceptors, as well as transmission systems, can suddenly change the yacht direction if operated too rapidly or with high angles of incidence, especially with increasing yacht speed and during manoeuvres (as they are usually sized and optimized for intermediate speed). It is therefore necessary to get well familiar with their use and related devices reactions in any condition and especially at high speeds.

CAUTION

The manual use of Interceptor (“trim assist” function disabled or override), running at high speed, requires special attention and it is normally not recommended.

DANGER

As is good practice on a yacht, always make sure that passengers are seated before performing large adjustment manoeuvres on the interceptors, especially if you are navigating at high speed.

5.5.2 Interceptors system maintenance

Component	Maintenance	Notes and precautions
Interceptors system	Oil level check	Check oil level inside the control unit tank before each navigation, and anyway at least once a month. If necessary top up using the Manufacturer recommended oil. Regularly check the soundness and status of the various hydraulic pipes, making sure that the system is not leaking.
	Filling and draining	As stated in the Manufacturer's Manual, after prescribed operating hours. Do not discharge hydraulic oil at sea, but in the special areas for toxic waste disposal.
Sacrificial anodes	Check and replacement	Check at least once a month the 2 sacrificial anodes mounted as interceptor protection and replace them when necessary.

CAUTION

Periodically clean the interceptors to remove any corrosion that may affect their efficiency.

5.6 BOW THRUSTER

The bow thruster **(1)** is a very simple and strong device, but it requires some special care:

- The thruster must be used at a very low speed, or without fresh way; at higher speed, more correct reactions can be obtained with the offset use of the gear boxes;
- The Manufacturer, considering the excessive overheating, has foreseen a continuous run of max. 3 minutes. The electric engine **(2)** is equipped with a built-in protection magneto-thermal, which stops the electric engine, in case it overheats and starts it again once it has cooled down. You should consider this when planning the manoeuvres to carry out;
- Each time the yacht is lifted, check the condition of the thruster, of the protection anode and of the fastening system.

On the battery breaker **(3),** located in the technical room is a manual button with two positions:

- ON: in this position, the battery breaker may be automatically closed/ opened by respectively turning ON/OFF the thruster's control panel;
- OFF: in this position, the battery breaker is always OPEN, regardless of the turning ON/OFF of the thruster's control panel.

To close the battery breaker and have the thruster powered and ready for the manoeuvre, in general, it is necessary to:

- Position the automatic battery breaker to the ON position (button "extracted");
- Close the engine battery breaker;
- Turn ON the thruster joystick.

NOTE

For further information on use and maintenance, please refer to the manufacturer's manual.

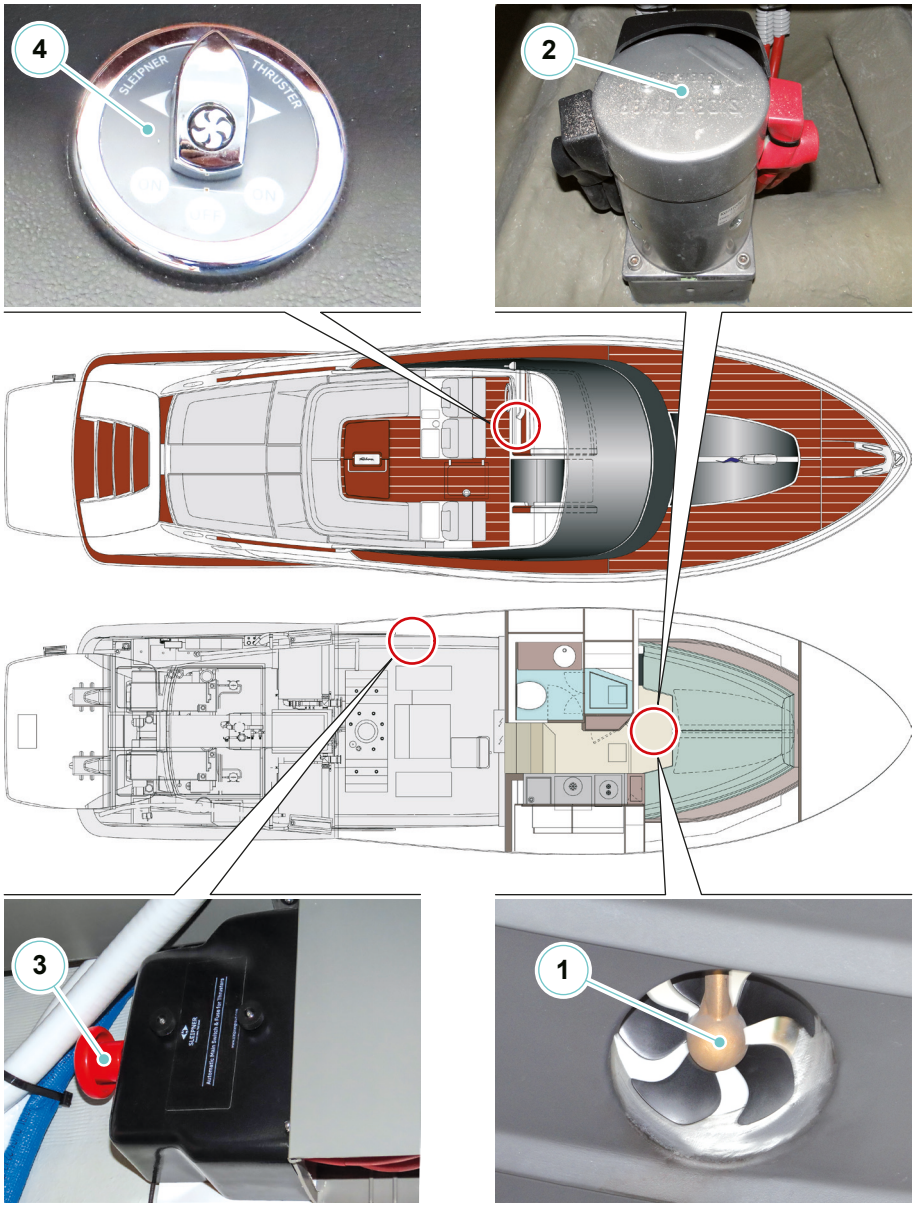

5.6.1 Use of the bow thrusters

Before using the thruster must activate the battery breaker located in the technical room and the related switch on the helm station; after activating the power supply, press the “ON” button on the control panel.
The warning light indicates that the device is ready for use.
The electric engine of the thruster is controlled by a control panel **(4).**
When the thruster is no longer in use, press button OFF.
Before getting on harbour, disconnect the switch and the battery breaker.



DANGER

During bow thruster operation, pay attention to possible swimmers or small yachts which may be close to the thruster openings.
Do not test the thruster when the yacht is outside water, unless you are sure the workers are at safety distance from the thruster tunnel.

CAUTION

When the bow thruster is not used, always disconnect the control unit.

CAUTION

Remember to disconnect the power supply of the system when manoeuvres are ended or during normal navigation.



DANGER

When the bow thruster stops supplying the thrust while the electric engine turns, there might probably be a fault in the transmission system.
In this case, immediately disconnect the bow thruster.

CAUTION

When the bow thruster stops supplying the thrust while the electric engine turns, there might probably be a fault in the transmission system.
In this case, immediately disconnect the bow thruster.

CAUTION

Never activate the bow thruster longer than one second when the yacht is at dry shore, because this can damage the electric engine seriously.

CAUTION

When you leave the yacht, or during maintenance work on the thruster, you must turn all the battery breakers on board to the manual OFF position.

CAUTION

In case it is necessary to replace a fuse on the system thruster, to involve a technical competent naval electrician.
Be sure to view the preliminary technical and operational documentation relative or contact RIVA assistance.

5.7 GANGWAY SYSTEM (OPTIONAL)

Your yacht is equipped with an electro-hydraulic control unit, located on the starboard side of the technical room, which control the gangway.
The movement of this devices is controlled by means of control panels installed in the control station.

DANGER

NEVER start navigation when the gangway are not correctly retracted.

NOTE

In case of pump fault, or power supply failure, it is possible to operate the hydraulic control unit by means of the manual emergency pump, by operating the relevant lever provided by the Manufacturer.
For the correct operations to be carried out, please refer to the Manual supplied by the Manufacturer.

CAUTION

The hydraulic equipment, although being easy to handle, may cause damage to property and harm to people. Its use is recommended only to well experienced people.

NOTE

For further information on use and maintenance, please refer to the manufacturer's manual.

DANGER

The gangway, for boarding and leaving the yacht, shall be used only by one person at a time; make sure never to exceed the maximum capacity stated by the manufacturer.
Never operate the gangway when someone is passing on it; before activating it and during operation, make sure that no one is within its moving range.
When walking on the gangway, be cautious and keep hold to the handrail; as it is made of rope, it cannot be considered a rigid and safe support, but simply a help to keep balance.

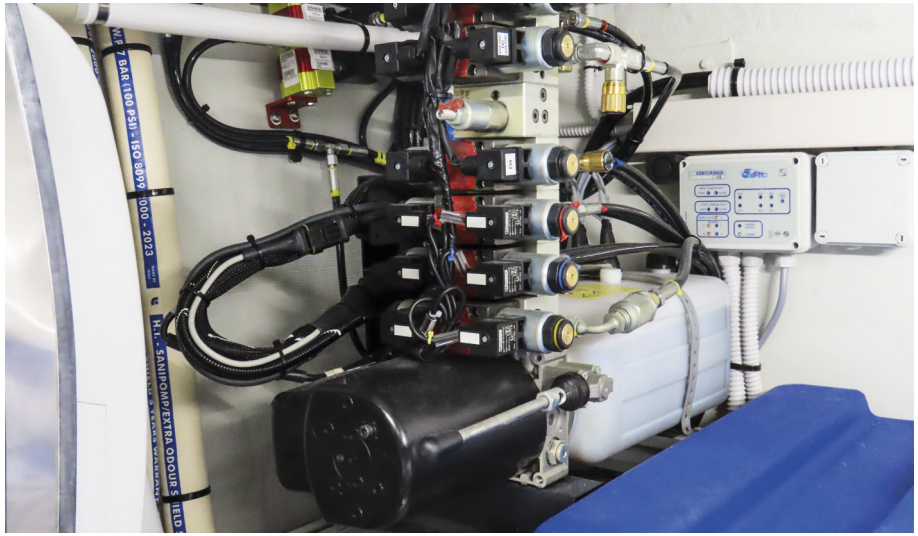

Gangway system diagram

HATCH OPEN - FRONT VIEW

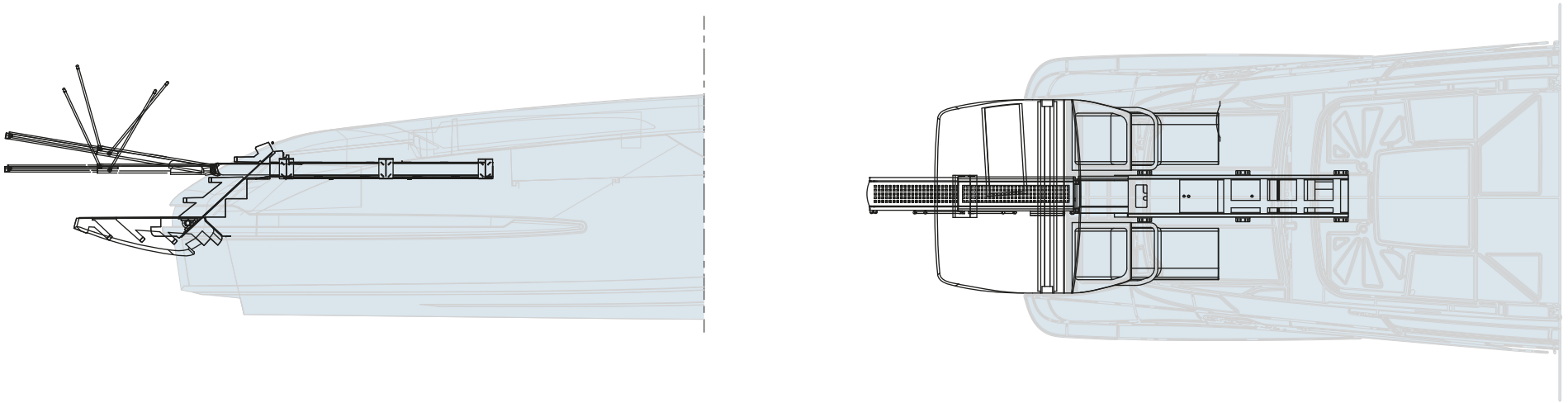

HATCH CLOSED - FRONT VIEW

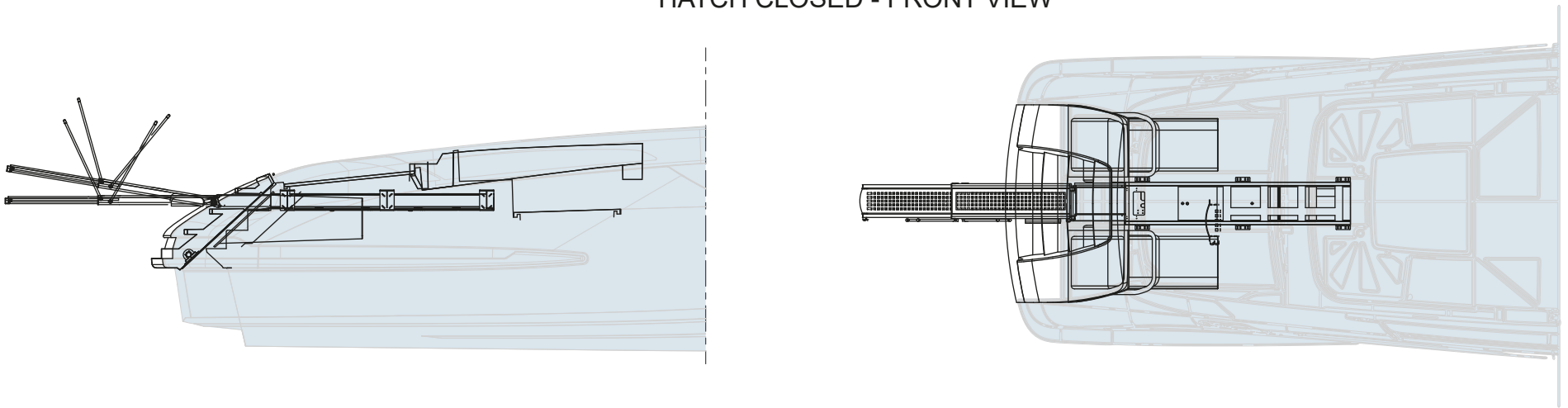

5.7.1 Gangway system maintenance

Component	Maintenance	Notes and precautions
Hydraulic control unit	Oil top up	Check the oil level inside the tank every month and anyway before each navigation. Top up keeping the oil level at about three-quarters of the tank's capacity, and using the type of oil recommended by the Manufacturer.
Gangway	Cleaning	As this device is located in a very critical position compared to all other on-board equipment, being continuously in contact with water, salt and exhaust gas, they require a more accurate cleaning.

DANGER

During cleaning or maintenance operations, make sure that nobody can activate the gangway, they causing serious injury to persons, by cutting off power supply.

ENVIRONMENT

Do not discharge hydraulic oil in the sea, but in the special areas for toxic waste disposal.

NOTE

Improper use of the hydraulic systems, altering of the flow calibration, disrespect of manoeuvring procedures described in this manual relieves RIVA of all liability.

5.8 GYROSCOPIC STABILIZER (OPTIONAL)

The gyroscopic stabilizer **(2)** is located in the technical room.

This system allows to soften the roll of the yacht in the case of sea-going navigation.

The gyroscopic stabilizer can be controlled by means of the control panel **(1)** on the dashboard.

NOTE

For further information on use and maintenance, please refer to the manufacturer's manual.

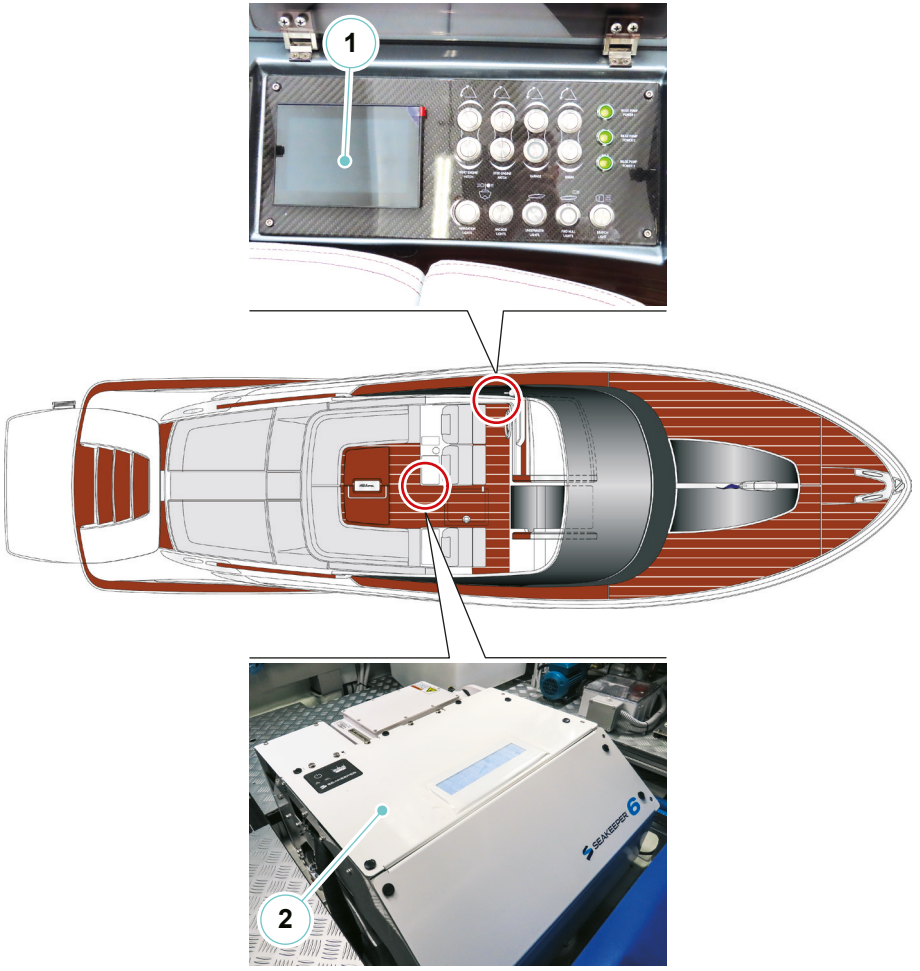

5.9 SWIM LADDER

Your yacht is equipped with a manual handling swim ladder.
The swim ladder is positioned inside the garage on the port side door.

DANGER
NEVER start navigation when the swim ladder are not correctly retracted.

DANGER
When getting on and off the yacht, it should be used only by one person at a time, always making sure that the maximum load capacity defined by the Manufacturer is not exceeded.

DANGER
In no way use the swim ladder when the engines are running. Pay utmost attention to not approach to the zone of the interceptors and propellers, because they could be accidentally activated.

For the swim ladder extraction proceed as follows:
1. Open the garage hatch.
2. Turn the retaining pin (**1**) and retain the swim ladder.



3. Pull out the swim ladder completely.



CAUTION

Make sure that the swim ladder is correctly extracted and positioned before going down to water.

CAUTION

Pay attention because the ladder can be slippery.
Secure the grip before starting the return on board.

WARNING

For a safe use of the yacht, when you are stopped at open sea and you are alone on board, always keep the swim ladder open.

DANGER

Risk of electric shock from leakage currents. Never swim in waters near harbours or marinas.

CAUTION

Do not use the swim ladder as a springboard.

DANGER

Pay attention to moving parts and to your hands.

MAINTENANCE

At least once a week carry out an accurate washing.
At least once a month:

- Check for corrosion signs;
- Grease the pulley gliding races of the steel cable;
- Tighten the fixing bolts.

At least once every three months, grease the swivel pins and the sliding sleeves.

Swim ladder system diagram

SWIM LADDER CLOSED

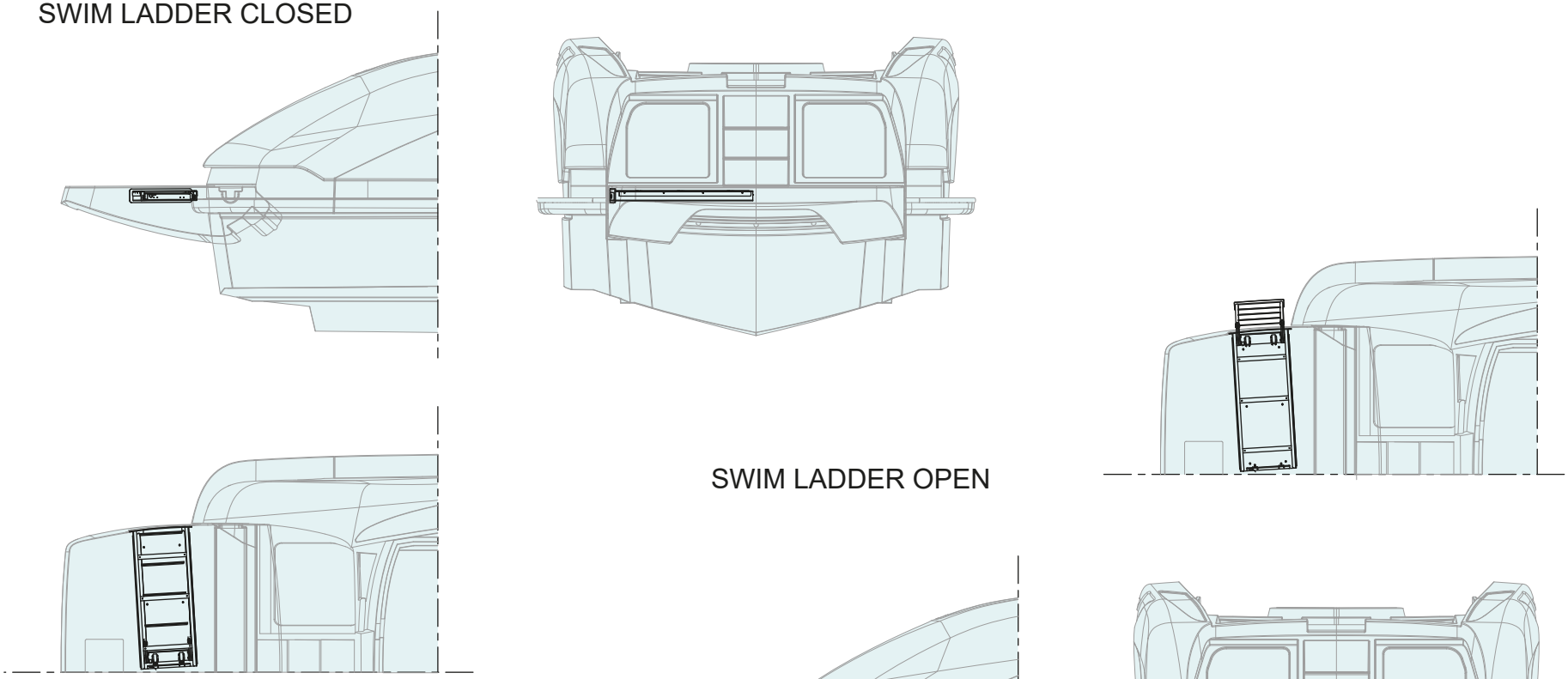

SWIM LADDER OPEN

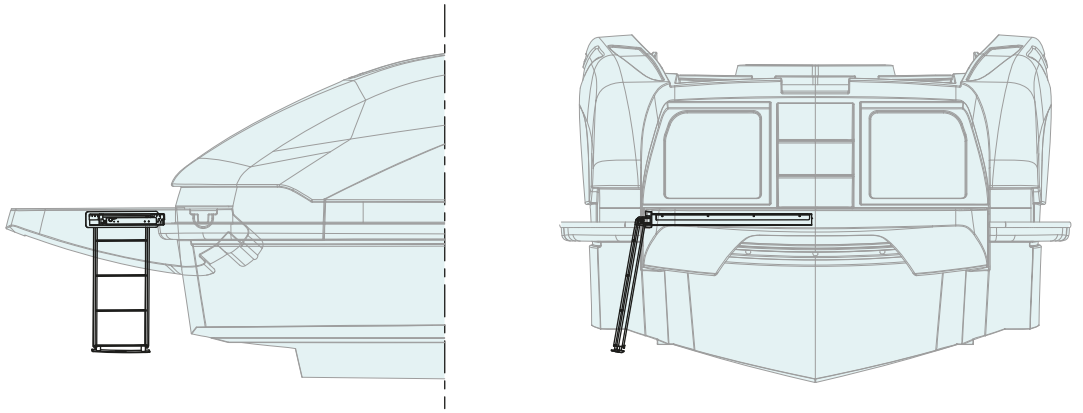

5.9.1 Swim ladder maintenance

Component	Maintenance	Notes and precautions
Swim ladder	Cleaning	The swim ladder are located in a particular position compared to all other on-board equipment, because they are continuously in contact with water, salt and exhaust gas, they require therefore a more accurate cleaning.



DANGER

During cleaning or maintenance operations, make sure that nobody can activate the gangway, the swim ladder and the garage hatch, because they could cause serious injury to people; it is recommended to disconnect the power supply.

5.10 GARAGE HATCH

The yacht is equipped with a garage hatch which when fully open acts as a swimming platform function.



To move the garage hatch use the buttons present in the dashboard.
When the engine is switched OFF, the push-button lights up and remains illuminated while moving and until the hatch is closed.

When the engine is switched ON, pressing the hatch open command will illuminate and a beeper will alert you that the hatch is open.

The movement are powered by a control unit located on the starboard side of the technical room.

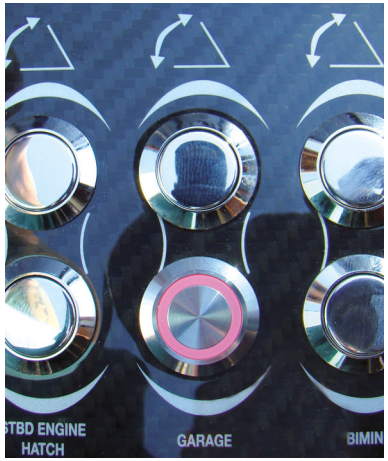

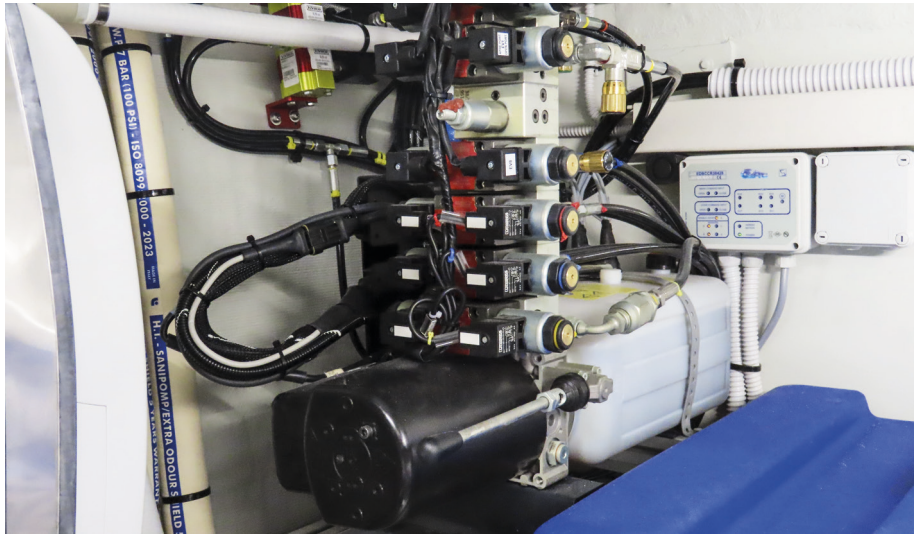

With the garage hatch is open you can access the 2 compartments at the starboard side and port side of the yacht. The compartment to starboard side contains a seabob and its battery charger (optional).

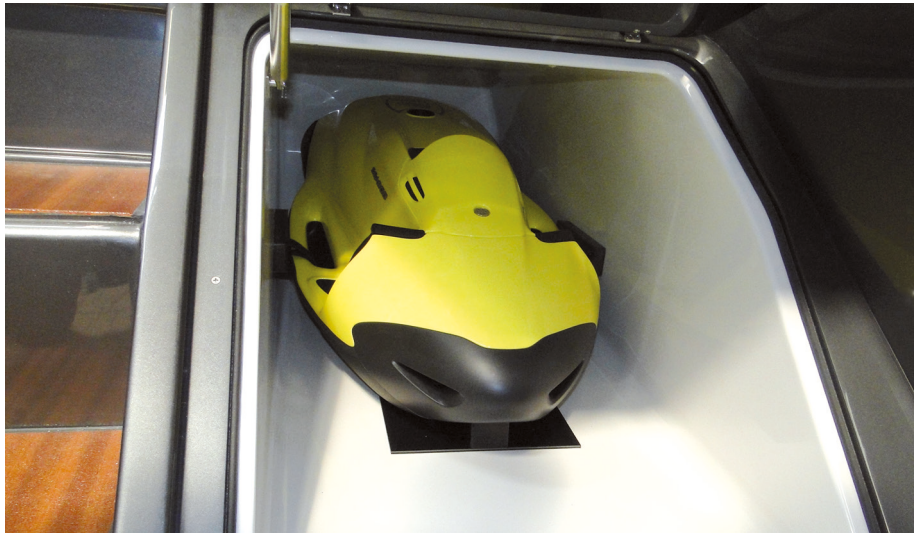

Garage hatch handling diagram

GARAGE HATCH CLOSED

FRONT VIEW

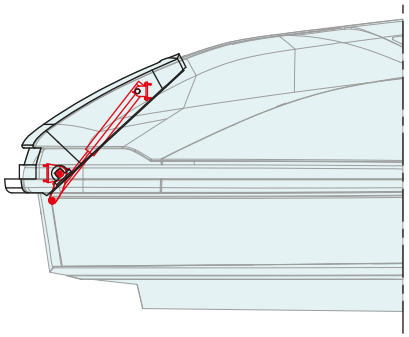

STERN VIEW

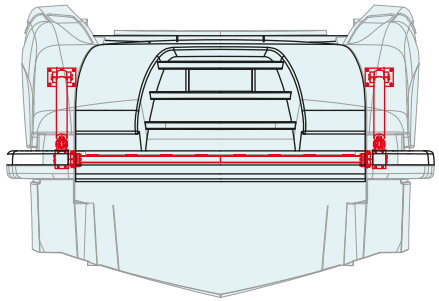

PLAN VIEW

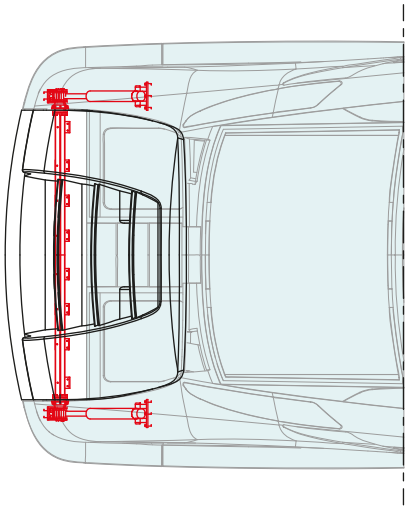

GARAGE HATCH OPEN

FRONT VIEW

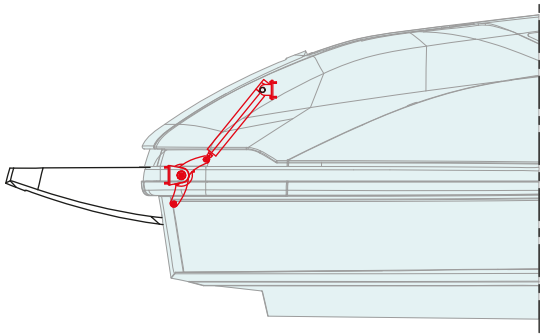

STERN VIEW

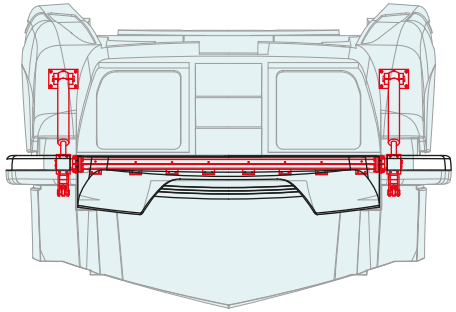

PLAN VIEW

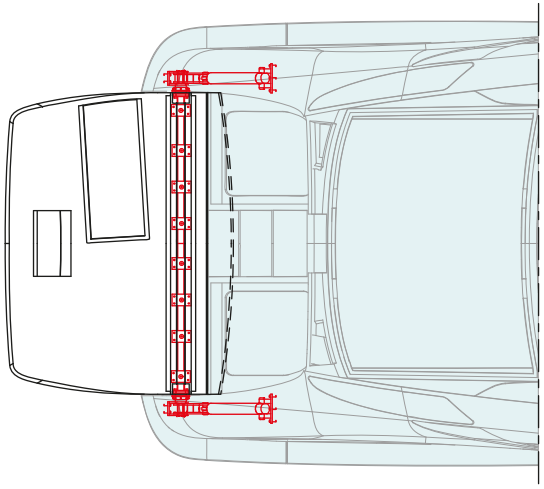

5.11 BIMINI TOP

The yacht is equipped with an awning Bimini top whose movements are controlled using the two buttons at the helm.



The two hydraulic engines that move the Bimini top are powered by a control unit located on the starboard side of the technical room.

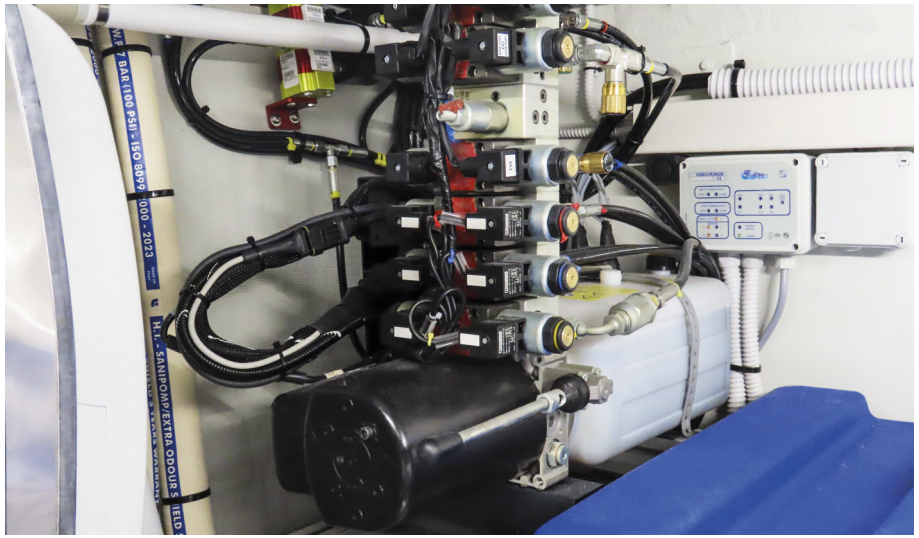

Bimini top handling system diagram

BIMINI CLOSED

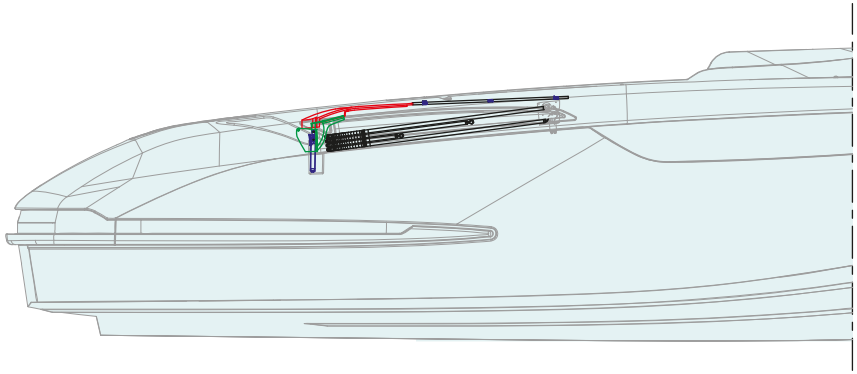

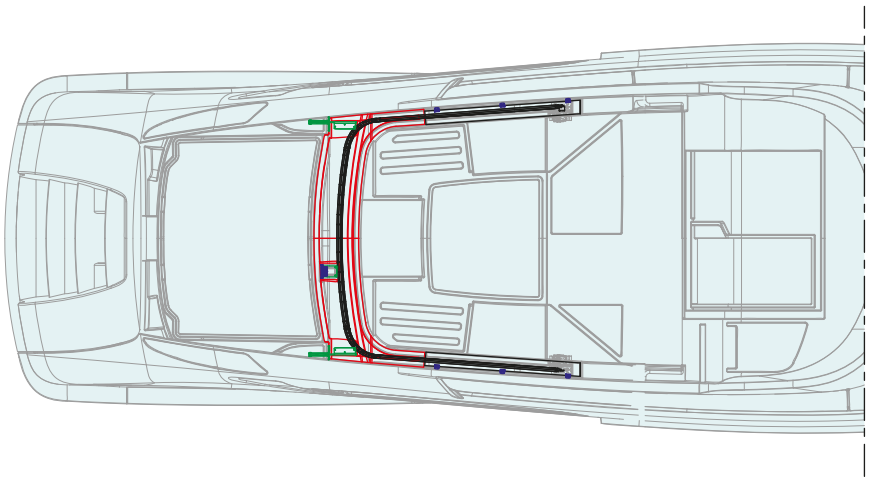

BIMINI OPEN

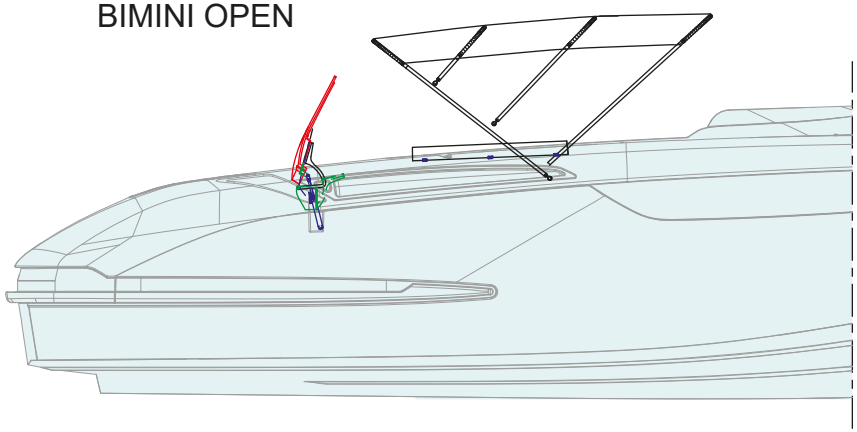

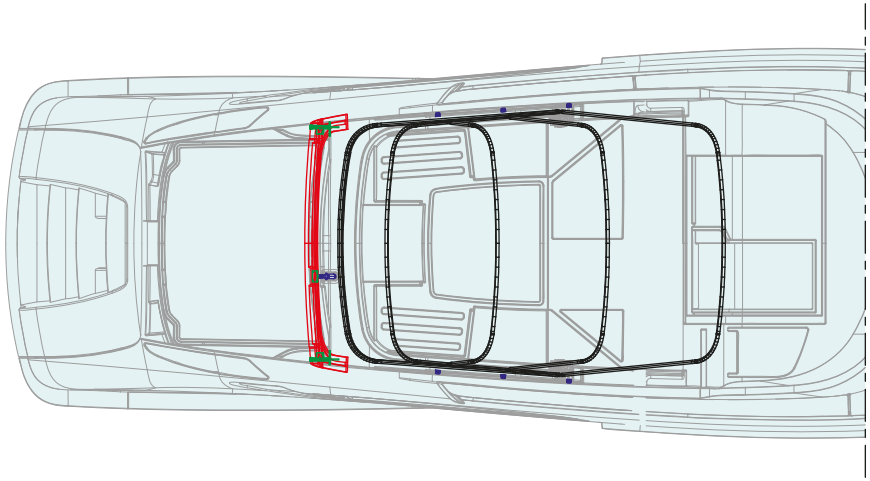

5.12 PROPULSION SYSTEM

5.12.1 Propulsion engines

The diesel engines are designed and produced with cutting-edge technology. The propulsion engines installed on board of your yacht, after accurate designing studies by RIVA, are perfectly suitable for this kind of yacht, also thanks to the high performances they are capable of providing. You will thus be able to enjoy high performance along with full reliability, to the advantage of your navigations and your and your guests' fun. The propulsion engines are provided with advanced electronics, in order to enhance the yacht's performance and reducing fuel consumption and exhaust emissions. Remember, however, that operation without problems and the expected high power may be attained only if the prescribed maintenance schedule is complied with and if recommended fuel and lubricants are used. The electronic control system of the engines provides:

- Engine monitoring;
- Engine control;
- Automatic control of air/fuel rate;
- Acceleration torque modelling;
- Injection timing control;
- System diagnostics.

Each engine is directly flanged to its reversing gear with a joint or cardan shaft.
The engines have been installed on suitable elastic supports which absorb vibrations and enable minimum movement of the engine; in this way, the structures and the devices connected with them are not damaged.
In addition, the elastic supports allow easy adjustment of the position of the engines, either during new installation or after the expected settlement. The engines are equipped with diagnostic and monitoring electronic systems, whose aim is to check the important operating parameters of the engines and to alert the Captain in case they exceed the admitted tolerance.

NOTE

For further information on use and maintenance, please refer to the manufacturer's manual.

5.12.2 Engine Specifications

Crankshaft power	294 kW (400 Hp)
Propeller shaft power	282 kW (384 Hp)
Engine speed, RPM	3500
Engine displacement	5.50 l
Engine configuration	In-line 6 cylinder
Compression ratio	1.69:1
Dry weight with DPH	790 kg (1.741 lb)

5.12.3 Propulsion engine maintenance

DANGER

Any maintenance intervention on the engines is to be carried out with the engines shut OFF, after they have sufficiently cooled down.



DANGER

Do not approach the V-belts or the engines pulleys with the hands, when the engine is running.



DANGER

Because of the high temperature in the engine room, oil or fuel leaks can evaporate and create a serious risk of fire. Regularly check the integrity of the system.

CAUTION

Only use the approved fluids indicated by Manufacturer, otherwise the warranty given by the Manufacturer is voided.



DANGER

A wrong use, a wrong maintenance, tampering and replacement of pieces, can cause serious damages or mortal events, beyond damaging the equipment.
The interventions on the electrical and mechanical equipment must be carried out by qualified staff after having examined the manual delivered by the Manufacturer.

CAUTION

It is absolutely necessary to view together with RIVA the documentation for the different components provided by the manufacturer; for any problem relevant to use or maintenance, please contact the Service Centres listed in the documents provided by the manufacturer.
Anyway, in case of need, some little interventions can be carried out by the staff on board, after consulting the operation manual.

CAUTION

During navigation, regularly check the cleanliness of the sea water strainer baskets.
If the yacht is navigating in a dirty sea area, check the condition of the strainers and clean them.
Caution is very important to prevent damaging mechanical parts (engines, generators, etc..), draining systems and to prevent jeopardizing the safety of the yacht.

CAUTION

Do not tamper or try to repair the injection pump or its power unit on a diesel engine. In case the lead seal is damaged, this will void the engine warranty.
Have the injection pumps or the injectors repaired only at an authorised Service Centre.

ENVIRONMENT

Dispose of waste materials (engine oil, fuel, filters, etc..) with respect for the environment and according to the rules in force.
Use only authorized disposal procedures and, in case of doubts, contact the Port Authority.

Component	Maintenance	Notes and precautions
Lubrication system	Oil level check	Check the oil level by means of the special dipstick; make sure the level is included in the allowable range (MIN - MAX). Do no start the engines if the oil level is not included between the two reference marks, as indicated in the Manufacturer's Manual. 
	Oil and oil filter replacement	Replace engine oil according to time intervals and oil type suggested by the Manufacturer.

Component	Maintenance	Notes and precautions
Fuel system	Cleaning of fuel pre-filter	Clean the fuel pre-filter with proper diesel oil and dry it with a compressed air jet.
	Drain of the fuel filter condensate	Each time the engine oil is changed, open the draining plugs and have the condensate flow out until only fuel comes out.
	Fuel filter replacement	Replace fuel filter within the intervals indicated by the Manufacturer.
Cooling system	Drain the cooling system	Drain the coolant only when the engine is stopped; follow the procedure indicated by the Manufacturer. 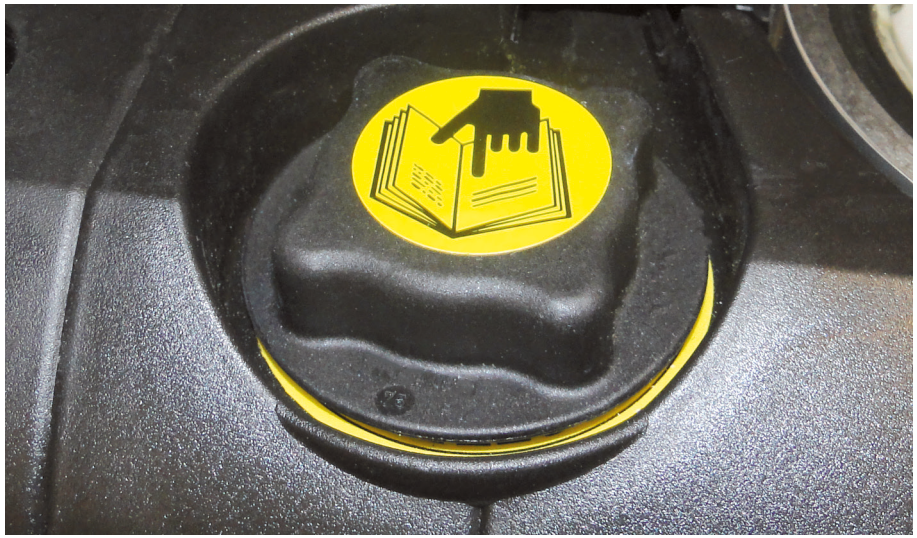
	Filling and draining	Refill with a mixture of drink water and antifreeze on ethylene glycol basis or anticorrosion agent.
V-belts	Check the belts condition	Make sure that there are no cracks, no traces of oil, no signs of overheating and no signs of wear; if so, replace them.
	Check the tension	Use the proper gauge supplied by the Manufacturer to measure the belt tension.
	Replacement of v-belts	Replace the v-belts at the intervals recommended by the Manufacturer.

5.13 GEARBOX

The yacht is equipped with 2 marine gearboxes performing the following main tasks:

- A coupling the propulsion engine with the sterndrive and reducing the number of propeller revolutions;
- Reversing the motion direction;
- Stopping the propeller shaft motion (idle).

The gearboxes are directly flanged on each engine by means of cardan shafts. Torque transmission occurs by means of oil-lubricated gears; oil is cooled, by means of a heat exchanger, by the sea water contained in the cooling circuit coming from the engine.
With the use of the gearbox controls, 3 operating modes are available:

- Idle: the output shaft connected to the propeller shaft, does not transmit any rotation of the sterndrive.
- Forward run: the output shaft connected to the propeller shaft, has the same rotation direction of the input shaft.
- Reverse run: the output shaft connected to the propeller shaft has the opposite rotation direction of the input shaft.

A valve/control valve block, driven by the throttle installed in the helm station, controls the forward and reverse gear engagement.
The gearboxes are equipped with an incremental control system of pressure which allows clutch engagement at a low pressure, to progressively increase pressure until the clutch is completely engaged.
This system enables a soft engagement of gears and minimizes pulses upon engagement.
Each gearbox is provided with a suction filter along the lubrication circuit, upstreams of the pump, with the purpose of preventing the introduction of particles and residues with the pump's suction.
Furthermore, each gearbox is provided with a second filter of "cartridge" type, connected between the pump's outlet (delivery) and the transmission inlet.
The identification plate attached to each gearbox, further to product identification information, provides useful indications on the oil capacity of the gearbox pan, minimum operating pressure and oil check and change intervals.

NOTE

For further information on use and maintenance, please refer to the manufacturer's manual.

5.13.1 Maintenance of the gearbox

Component	Maintenance	Notes and precautions
Gearbox	Oil level check	For the correct maintenance and check procedures, refer to use manual delivered by the Manufacturer.
	Oil change	For the kind of oil and grade of viscosity recommended by the Manufacturer, refer to the gearbox plate.
	Check and cleaning of the suction filter	
	Replacement of oil filter cartridge	Have the scheduled maintenance operations performed at the correct time schedule by authorized and skilled personnel, in order to keep the gearboxes perfectly efficient.

CAUTION

Under normal operation conditions, the gear change can be carried out with the engine at low speed.
However, in case of emergency, gearshifting can be carried out with the engine at high speed, thus remarkably reducing clutch life though.
The use of the gearbox with a low quantity of oil may damage the gears.
An excessive quantity of oil may cause seals and vents to leak and can remarkably increase the operation temperature.

CAUTION

Check the oil level after filling the circuit idling.
Make sure that the oil and water circuits are free of air pockets idling.

5.14 HYDRAULIC STEERING

The steering system is placed directly on the sterndrive engines.
Slack pistons (**1**) are controlled by a joystick (low speed manoeuvres) and rudder on the dashboard and are moved thanks to the electronics of any single engine.



CAUTION

Each sterndrive has an electronic management used.
In case of failure or malfunction of a sterndrive, you can keep control of the yacht using the other operational.

NOTE

For further information on use and maintenance, please refer to the manufacturer's manual.

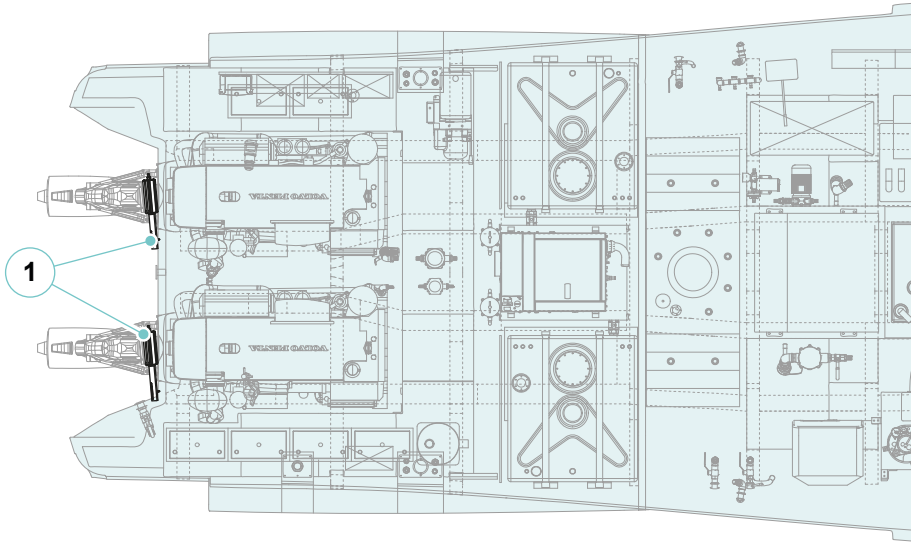

5.15 FUEL SYSTEM

The fuel deposit of your yacht consists of a tanks **(1)** installed in the engine room, close to the fore bulkhead, reinforced internally and certified and tested by RINA.

The tank is made of fiberglass, according to laws in force, fuel and corrosion-resistant; it is fastened to the bottom structure and resin bonded to the fore bulkhead of the engine room; the tank's total capacity is 1000 litres (264 gals).
Inside the tank there are some antiflapping bulkheads (diaphragms) in order to avoid an excessive swashing of fuel due to the wave motion of the sea.

Hermetically sealed inspection flanges are bolted on the tank, through which all fuel delivery and return passages occur.
The refuel plug **(2),** through which the tank is filled by gravity, and closed by a screw plug, is located on the starboard side.
The fuel intake of the yacht is equipped with a flow switch having the function to prevent undesired leaks of fuel from the plug and from the vent which may stain the bridge and pollute the surrounding waters.
The fuel bleeding from the intake ducts is collected by a tank with suitable capacity which, on its turn, will be drained automatically into the fuel tank through the relevant return duct.

While boarding, the fuel flow produces a lot of foam; if it comes out, you might think the tank is full.
Therefore, it is good to wait for a few minutes and then top up, in order to be sure that the tank has been completely filled.
The vent piping, with flame-breaking net, connects the upper part of the tank to the wind-proof discharge located on the yacht's starboard side.

Engine Fuel filter

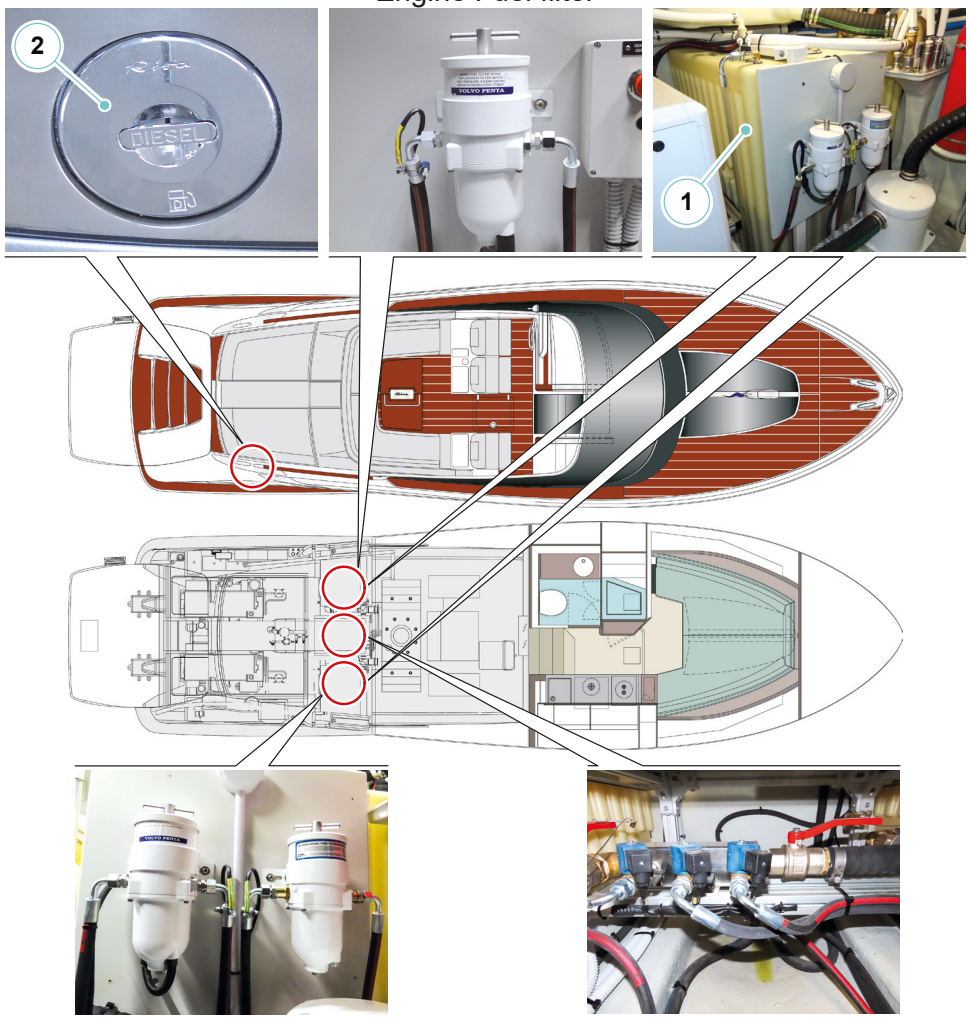

Generator and engine fuel filters

Ball valve tank insulation

NOTE

We recommend filling the tank some hours before departure; in this way, the impurities and water in the fuel will decant on the tank bottom as they are both heavier than fuel.

The presence of condensate water inside the fuel tank favours the generation of micro-organisms in the fuel, which cause early clogging of the filter and corrosion damage. It is therefore necessary to regularly drain the condensate water from the tank and the special separator filters.
On the bottom of the tank there is a cavity with draining device, in which impurities and condensate water may collect.

The particular shape and arrangement of the tank eases settlement of possible impurities or water which may be present in the fuel; it is advisable to carry out tank drain, by means of the special air valve, a few hours after refuel, and possibly while the yacht is stopped.

It is also advisable to connect the bleeding valves delivery to a hose, convoying the liquid into a bucket in order to avoid collecting flammable fuel in the bilge, thus preventing the formation of noxious exhalations.

DANGER

Because of the high temperature in the engine room, oil or fuel leaks can evaporate and create a serious risk of fire.
Fuel leaks can cause fire. Regularly check the integrity of the system.

ENVIRONMENT

Handle water mixed with fuel and dispose of it according to the rules in force. Use only authorized disposal procedures and, in case of doubts, contact the Port Authority.

CAUTION

The inlet plug carries the indication “DIESEL” to avoid accidental input of different fuels.
To avoid damage to the system and tanks, we recommend refuel by gravity and not by pressure.

The fuel level, shown on the helm station digital display, is detected by the electronic level switch installed near the tank itself.
This instrument is equipped with a fuel visual level indicator which can be operated by contemporarily pressing the push-button valves located in the lower and in the upper part, to be operated whenever it is necessary to check the actual fuel level inside the tank.

5.15.1 Fuel circuit

The fuel inside the tank supplies the propulsion engines and the generators, by which it is sucked through fuel-resistant and fireproof pipes.
During the various passages of the fuel, before it reaches the engines, some natural phenomena occur, as the forming of condensate water, weed generation, breakaway of solid particles from the several containers in which fuel is transferred, which alter its propelling properties.
Most of the engine failures are due to these phenomena, water and solid corruptors, which irremediably damage pumps and injectors. For this reason, filters/separators have been installed for the propulsion engines, which the fuel contained in the tank must pass through before reaching the engine pumps.
The separator filters, besides performing an effective filtering action by retaining suspended impurities, are able to separate water that may be present in the fuel.
This is obtained in two different and sequential ways: by centrifuge and by coalescence.

The separator filters, installed in the engine room near the fuel tank, are provided with a cup with bleeding valve in the lower part, which allow bleeding both water and impurities.



Inside the cup there is a sensor, which sends an alarm signal to the helm station when the water level is excessive and system bleeding is necessary.
The yacht is also equipped with separator filters, which have the same effectiveness characteristics of engines filters and ensure further purification of the fuel sucked by the engines.

The filtered fuel, sucked by the fuel pumps, reaches the engines through the delivery ducts.
The excess fuel, which cannot be burnt by the engines, is drained again into the fuel tank through the return ducts.
The propulsion engines' fuel suctions are cut off by solenoid valves automatically opened and closed during engine start up and shut down, by means of the ignition keys.

Also the generator set is directly supplied by the tank, with manual cut-off valve, solenoid valve (automatically opened and closed during generator set start up and shut down) and separator filter.

The solenoid valves for fuel oil supply to the engines (propulsion and generator) are controlled when closed by the fire-fighting system control unit, in case of a fire, it stops all engines and prevents them from supplying fuel. Please refer to Chapter 2 – "Safety regulation and equipment" in this Manual.

DANGER
Because of the high temperature in the engine room, oil or fuel leaks can evaporate and create a serious risk of fire.
Fuel leaks can cause fire. Regularly check the integrity of the system.

CAUTION
Pay attention not to accidentally damage fuel system lines. Perform a visual inspection of all pipes periodically.

Fuel system diagram

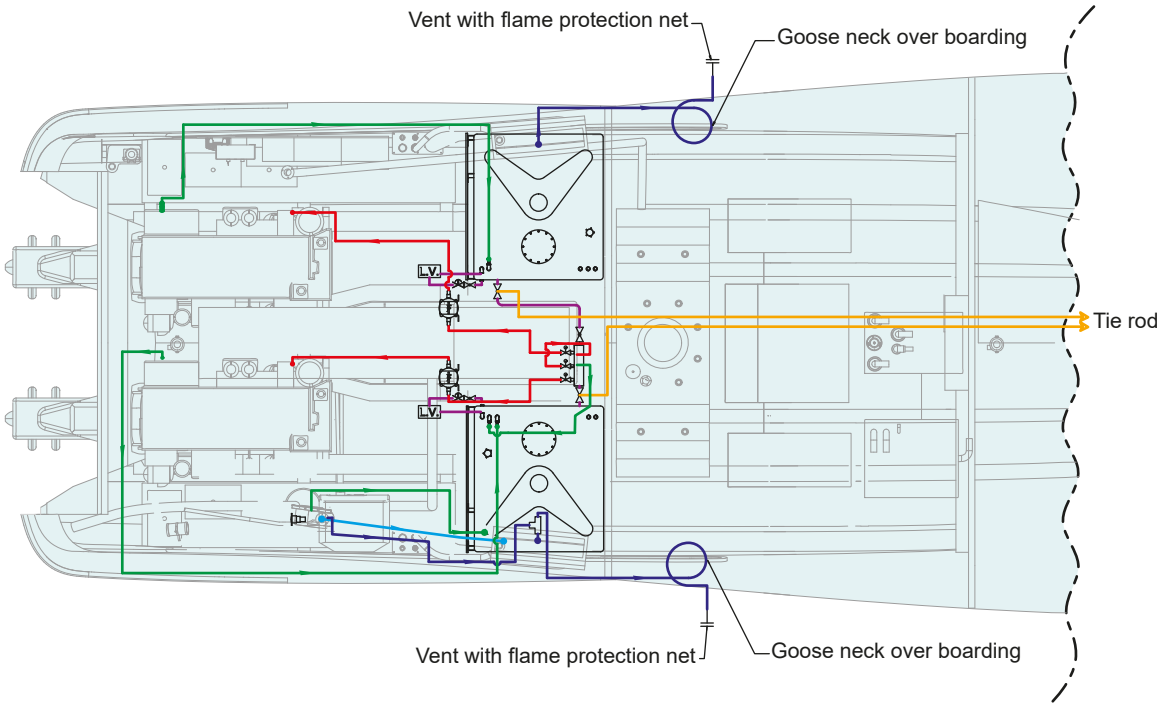

- Single prefilter
- Shut-OFF valve for fuel interception
- Flow switch
- Pushbutton valve
- 3-way manifold Diesel supply
- Ball valve
- Vent with flame protection net
- Filling cap
- Diesel supply solenoid valve

- Suction line
- Return line
- Venting line
- Filling Line

5.15.2 Fuel quality

The quality of the fuel is crucial for a good performance of the engines installed on your yacht. The fuel should be purchased from reliable high volume filling stations, for both the quality and a probable short stay of the fuel inside the shore tank.
The fuels preferred and suggested by manufacturer adequately provide for engine correct operation and maintain its high performance.
This fuel is commonly known as “Diesel fuel” or “gas oil”.

Fuels compliant with:
- European Standard EN590
- DIN EN 590 (Germany)
- ÖNORM EN 590
- ASTM D975 No. 1D (USA)
- BS 2869 Part 1 Class A 1 (United Kingdom)
- BS MA 100 DMX (Marine Diesel Fuel)

are suitable to supply the engines.

The use of fuel other than the type suggested and recommended by engine manufacturer may cause the following problems:
- Difficult start up;
- Poor combustion;
- Formation of deposits in injectors and in the combustion chamber;
- Engine and fuel supply system service life reduction.

Micro-organisms (bacteria, fungi) contained in fuel can reproduce in favourable conditions. Growth of micro-organisms is favoured by water, present in all fuels as condensate, and elements fundamental for life such as sulphur, phosphorus, nitrogen, oxygen and trace-elements to be found as chemical bonds.
Also possible additives may contribute to micro-organism growth.
Proliferation speed depends on temperature and leads to the formation of fibrous fungi suspensions, mud or to micro-organic corrosion.

The consequence of this process is the obstruction of the fuel filters with rust scales and fibres. The first symptom of these phenomena is frequent replacement of the fuel filter and afterwards engine performance drops until its total standstill.

If you notice the presence of micro-organisms in the fuel feeding system, it is necessary to use proper detergent products suggested by the engine Manufacturer according to the procedures stated.



DANGER

Stop all on-board engines during the refuel process.
Avoid undertaking hazardous activities.

5.15.3 Fuel system maintenance

Component	Maintenance	Notes and precautions
Fuel tank	Bleeding	Bleed the tank every 2 refuels and at least once a month, in order to prevent condensate water and various impurities from entering the fuel circuit. Wait some hours from refuel to allow impurities and water to deposit. Do not discharge bilge water containing bleed fuel into the sea, but collect it and discharge it to the appropriate areas on land for hydrocarbon disposal.
Separator filters	Cleaning and purging	Bleed the separator filters at least once a month in order to drain condensate water and various impurities collected in the special lower cup. Periodically replace the filtering element, increasing frequency if necessary.

5.15.4 Bleeding of separator filters

The separator filters are provided with a cup, in the lower part, provided with a bleeding valve, which allows bleeding the water and impurities decanted on the bottom of the cup.
For the single filter separator bleed see its specific documentation.

5.15.5 Separator filter cartridge replacement

Separator filters are equipped with internal filtering cartridges which retain impurities, preventing them from entering the engine fuel circuit.
For the internal filter element exchange see its specific documentation.

ENVIRONMENT

Every marina has dedicated toxic waste disposal areas. Do not dispose into the environment waste, which may cause environmental damage (such as used oil, fuel oil, oily liquids, batteries, etc..).
Prior to performing any job in the engine room, disconnect the bilge pump switches, to prevent accidental fuel, lubricant or other liquid leaks and therefore the pollution of the waters surrounding the yacht.

5.15.6 Bleeding of filters

The yacht is also equipped with separator filters, which have the same effectiveness characteristics of engines filters and ensure further purification of the fuel sucked by the engines.
The filters are provided with a transparent cup, in the lower part, provided with a bleeding valve, which allows bleeding the water and the impurities decanted on the bottom of the cup.
Cleaning / replacement of the filter element see its specific documentation.

5.16 SEAWATER COOLING SYSTEM

5.16.1 Cooling system description

Sea water directly sucked by the inner centrifugal pumps of the engines is used for engine cooling. These pumps, by means of their heat exchangers, cool down fresh water in the internal cooling circuit by absorbing transported heat.
The sea water for cooling the engine, enters through the aft foot.
Many waters (harbors, rivers, coastal) contain sand and suspended matter.

In order to avoid the clogging of the heat exchanger and the intercooler, and to increase the durability of the engine cooling pump, each outlet to the sea is equipped with strainer for the external water and with shut-off for maintenance valve. Before entering into the heat exchanger, the cooling water passes through the intercooler to the charge air cooler.

The cooling sea water drawn in by the engine is sent subsequently to the inverters, for lubricant oil cooling.

The sea water for cooling the generator, the air conditioning unit and the interceptor, enters through the water intake placed on the bottom of the hull and protected by the grids.

The cooling water that is injected inside the ducts the exhaust is discharged overboard through the latter route.
The cooling water that is sent to inverters, once the lubricating oil heat absorbed, is conveyed in the exhaust of engines.

There is the possibility, in case of emergency or necessity, of removing large masses of water, if present in the bilge of the engine room, using the aspirations of the engine cooling circuit. For this operation, refer to “Intake emergency engines from the bilge.”

Generator sea cock

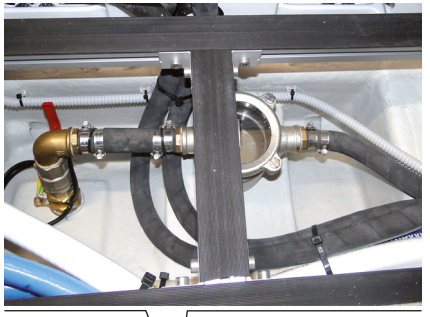

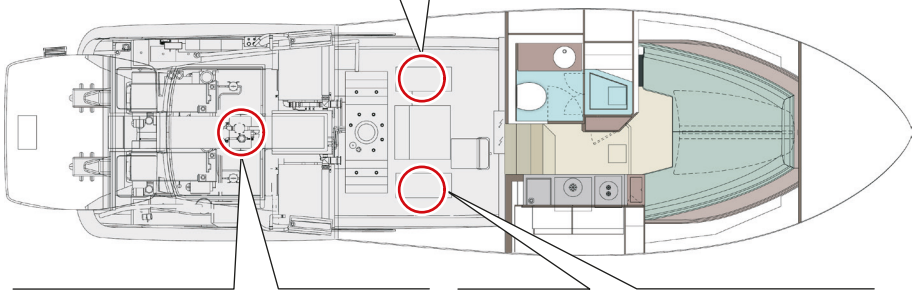



Gyroscopic stabilizer sea cock



Air conditioning unit sea cock

CAUTION

Before opening the sea cock strainer for cleaning, remember to close the cut-OFF valve in the hull.
If the yacht is not used, close as a precaution, all cut-OFF valves of the sea cocks; as soon as the yacht is reused, remember to open them.

5.16.2 Engine gas exhaust ducts

The engine exhaust gases are expelled from its sterndrive.

WARNING

Avoid prolonged use of engines at low speeds to avoid overheating of exhaust pipes due to reduced cooling water circulation.

NOTE

For further information on use and maintenance, please refer to the manufacturer's manual.

Sea water system diagram

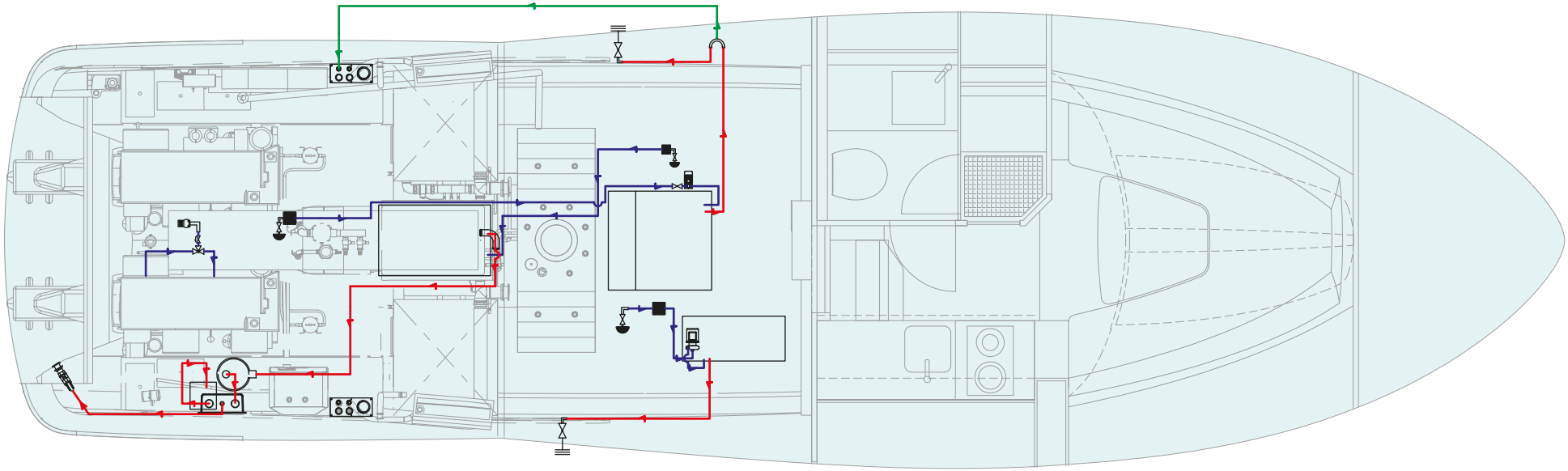

- Generator muffler
- A/C cooling pump
- Filter
- Sea cock
- Central exhaust
- Ball valve
- Siphon break
- Non-return valve
- Exhaust
- Gyroscopic stabilizer pump
- 3-way valve
- Elbow
- "T" fitting
- Foot valve
- Smoke separator
- Sea water suction line
- Sea water discharge line
- Siphon break vent line

5.17 VENTILATION SYSTEM

During operation, due to their surface temperature, the engines propagate radiant heat, which must be eliminated through efficient ventilation.
Air inlet and discharge openings are positioned so as to have the air flow passing through the whole room.
The yacht's diesel engines (propulsion engines and generator) suck combustion air directly from the engine room. Therefore, an efficient ventilation system prevents an excessive air and fuel heating, and thus avoids harmful power drops and does not jeopardise the operation of heat-sensitive components.
The external fresh air enters the engine room and the utility room through two inlets (air intakes) located on the bulwark on both sides of the yacht.
The air extraction is of the forced type, by means of three air extractors (sucking fans) which extract the hot air from the rooms.
When the engine ignition keys are set to ON, the air extractors are automatically started.
In order to start the air extractors, in manual mode and with the ignition keys set to OFF, press the start/stop push-buttons located in the helm station.
The power supply of the extractors is controlled by the SHUTDOWN system of the fire fighting system that, in case of automatic fire extinguishing system activation, or when operating the tie rod, shuts down the air extractors in order to prevent air change in the room (see "Fire fighting system").

CAUTION

With the engines in operation the extractor must always switched ON.
The extraction remains in operation for a few minutes after engine shutdown (auto mode).

DANGER

Carbon monoxide poisoning

Fossil fuel combustion generates a high quantity of carbon monoxide.
This gas is a colourless, odourless and highly toxic. When the engines and/or the generator are running, the yacht must be properly ventilated, in particular if underway at low speed, or when the exhaust fumes may blow back on board (e.g. when the yacht is shored or anchored or riding the anchor).

Ventilation system diagram

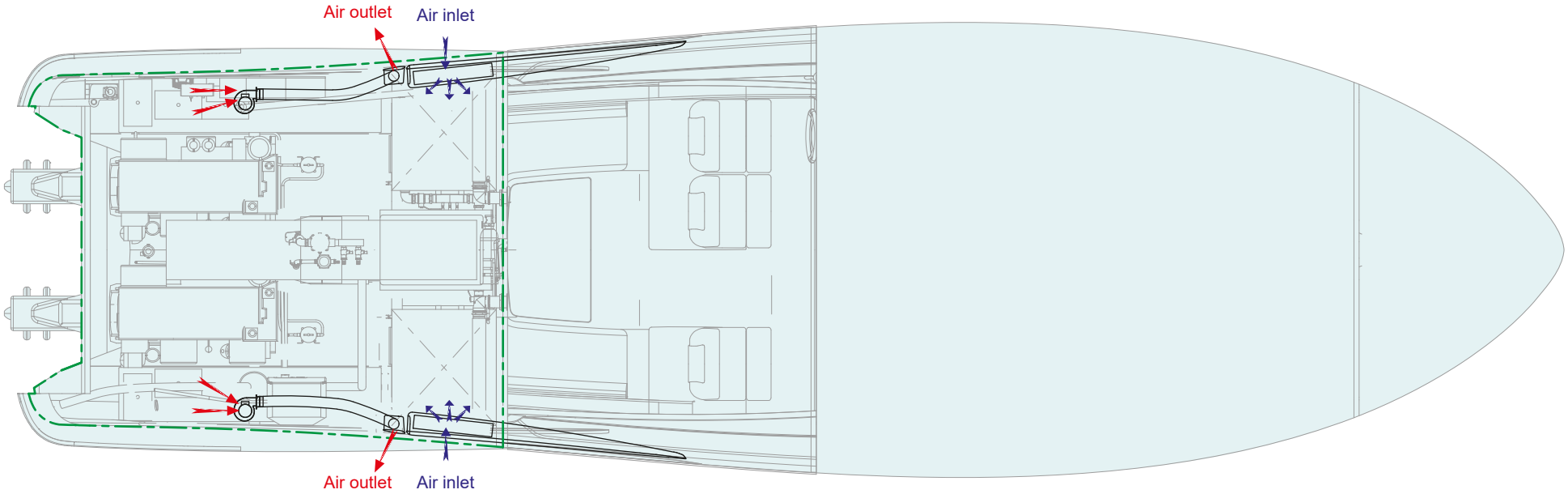

Extractor

Corrugated pipe

Air output line

Air inlet line

Protected space

5.18 CATHODIC PROTECTION SYSTEM

Immersed metal parts as steel, bronze, etc.., are protected against galvanic corrosion by sacrificial anodes installed on the bottom hull and on the appendixes, close to the areas to be protected.
Corrosion is caused by galvanic currents resulting from the proximity of metallic bodies with different electrochemical potential, immersed, in this case, in the electrolyte: sea water, in this case.
Protection against corrosion is obtained by connecting a noble metal to a less noble one; in this way, the noble metal (steel) is protected by an electron flow supplied by the less noble metal (sacrificial anodes), that wears out.
The cathodic protection system of the yacht consists of the following sacrificial anodes:

- Interceptors sacrificial anodes (n°4);
- Hull sacrificial anodes (n°2);
- Sterndrive sacrificial anodes (n°2);
- Generator sacrificial anode (n°1);
- Thruster sacrificial anodes (n°1).

The wear of the sacrificial anodes, besides depending from galvanic currents, can also be caused by environmental factors in the proximity of the yacht, such as: closeness to other metallic bodies, chains, metallic wharfs, bad insulation of on-land electric systems, different water salinity, etc..
It is therefore necessary to check the status of the sacrificial anodes very often.
The replacement is necessary when the wear is higher than 50%.
This operation must be carried out with yacht on dry shore or with the help of a diver.

CAUTION

Whenever the yacht must be lifted, verify the condition of each protective sacrificial anode and its fastening system.
In order not to jeopardise the protection's effectiveness, the sacrificial anodes must never be coated.
To clean or check the yacht in water, disable engine and generator start.

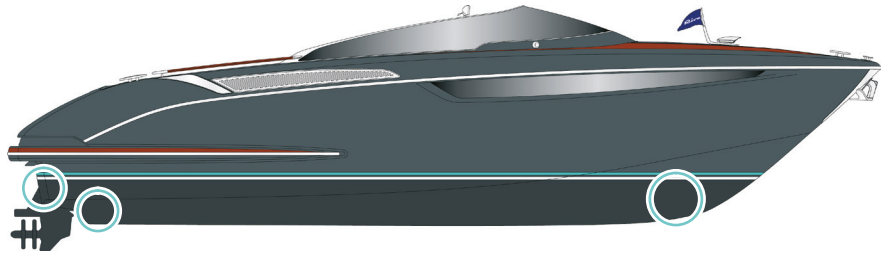

5.18.1 Maintenance of sacrificial anodes

Component	Maintenance	Notes and precautions
Sacrificial anodes	Periodical check	Frequently check the sacrificial anodes' wear conditions; replace them when the volume is reduced by more than 50%.
	Replacement	Loosen the sacrificial anode fastening nuts, extract the sacrificial anode and clean the resting surface. Assemble the new sacrificial anode, tighten the fastening nuts and cover the screw head with silicone.

5.18.2 Replacement of sacrificial anodes

Check the wear conditions of sacrificial anodes; they must be replaced if they show evident signs of corrosion or when the volume is reduced by approximately 50%.
After disassembling the worn-out sacrificial anode, clean the resting seat and replace with a new sacrificial anode, tightening the mounting nuts.
It is advisable to cover the mounting screws' heads with silicone, in order to ease their replacement.
It is advisable not to tighten the mounting nuts with glues or other materials which may prevent their removal.

CAUTION
Make sure not to cover the contact surface between sacrificial anode and hull, in order to ensure effectiveness of sacrificial anodes' action.

NOTES:

6 - INFORMATION FOR USE

6.1 GENERAL INFORMATION

This part of the manual describes the operations and behaviour to be adopted in the various situations that you may face during navigation. Generally speaking, there are some basic rules always to be taken into account, so as to enjoy your yacht with maximum safety.

- Periodically check the availability and efficiency of individual and collective safety equipment.
- Observe safety distance when anchoring.
- Check that all yacht safety equipment on board are in good conditions and no maintenance activity is overdue. The Manufacturer supplies the equipment required by the international regulations; the Owner is responsible for the provision of any safety devices required by national regulations of the Country in whose waters the yacht is navigating.
- In case of use of portable fire extinguishers lower deck, use the same precautions mentioned above.
- Do not use open flames nor smoke during transfers or next to fuel and lubricant.
- If a fixed HFC 227 fire-fighting system is used, do not ventilate the engine room for a certain time, until the fire has been completely extinguished. Before entering the room again, it is necessary to ventilate it.
- When operating the gangway, be sure that nobody is in the way.
- Oils, used filters, emulsions, coolants, electrolytes are all harmful products: avoid contacts with the skin and dispose of them carefully.
- In the engine room, pay attention to hot or moving parts.
- Access the engine room wearing individual protecting devices such as: antinoise earmuffs, gloves, etc..
- Do not scatter hydrocarbons in the environment.
- Frequently replace the fresh water stored in the tanks and apply bactericides as needed.
- Do not exceed speed limits in harbour and confined waters.
- Adjust speed according to sea conditions.
- Reduce speed in proximity of other yachts or swimmers. If necessary, put the engine control levers to neutral.
- Reduce speed before accessing the engine room if, at that time, you are the only available pilot.
- Handle hot oils carefully, in order to prevent serious burns.
- Secure engines, shaft lines and generators prior to perform any maintenance on them.
- Open the coolant tanks of the different engines very carefully, in order to prevent serious burns.
- Do not inhale exhaust fumes.
- Do not work on generator electrical panels when the generator is running: electrocution hazard.
- Before disconnecting a battery, check if the battery charger is operating. If it is, disconnect it and remove the negative wire first and then the positive one. When reconnecting, proceed in the reverse sequence (the positive wire first and then the negative one).
- Immediately service any part showing signs of corrosion.
- Never disconnect the batteries when the generator or the propulsion engines are running.



DANGER

The Owner is the only responsible for driving the yacht.
Prior to departure, the Owner must ensure that the safety equipment required by law is present on board and perfectly working.



DANGER

Before starting navigating and before operating the different on-board systems, we recommend carefully reading the Safety Rules for use described in this Manual.

6.2 PRECAUTIONS FOR HARSH CLIMATES

6.2.1 Cooling system

When temperature approaches 0°C (32°F), in order to avoid damage due to freezing, it is necessary to make sure that the engines' internal circuits are filled with antifreeze mixture.
Otherwise replace coolant with a mixture of water (drinking, demineralised or distilled) and antifreeze in variable proportions. Before filling the system with the suitable antifreeze mixture, it is necessary to wash out the cooling circuit.
The antifreeze liquid is recommended for all climates: besides having anti-corrosion properties, it widens the operation temperature range of the engines for which it is used, by lowering the freezing point and rising the boiling point.
The cooling systems of the engines should be filled, all the year long, with a mixture of 60% water and 40% antifreeze, so as to grant a protection against corrosion and frost down to -27°C (-17°F).
At the beginning of the cold season you will have to check and rise the antifreeze contents inside the cooling liquid according to the foreseen external temperatures.

NOTE
For further information on use and maintenance, please refer to the manufacturer's manual.

CAUTION
Do not use only water as a cooling liquid, as it is corrosive at the engine operating temperatures and does not protect suitably against boiling and freezing.

CAUTION
We recommend you to use technical liquids approved by the system Manufacturer.
Always avoid antifreeze concentration to drop below 40% in volume.
Replace the whole cooling liquid according to the schedule indicated by the Manufacturer.

ENVIRONMENT
Concentrated coolant must be treated as special waste.
When disposing of used cooling liquid, keep to prescription of Authority locally in charge.

6.2.2 Fuel system

With low temperatures, Diesel fuel forms some solidified paraffin suspensions obstructing the fuel filters; in this way the normal engine supply is impossible.
The fuel as per European standard EN590 guarantees fluidity up to 0°C (32°F) during the summer period, and up to -20°C (-4°F) during the winter period.

NOTE
There is a special type of fuel for the countries subject to very low temperatures.

In case fluidity is low or if the temperatures are below -20°C (-4°F), we suggest you to mix fuel with specific additives using the percentages prescribed by the Manufacturer.
In extreme temperature conditions (down to -54°C [-65°F]) it is necessary to use specific fuel, complying with engines' operating requirements.

CAUTION
Periodically check that all devices cooled with water are filled with the correct quantity of anti-freeze.
Each time the outer temperature drops below 0°C (32°F), the (fresh or sea) water inside the ducts may freeze and consequently cause breaks.
All the systems and equipment containing water, both sea water systems (engine cooling system, generator cooling system, etc..) and fresh water systems (windscreen wipers, fresh water pump, etc..) run this risk.

NOTE
For further information on use and maintenance, please refer to the manufacturer's manual.

6.3 PREPARING FOR NAVIGATION

6.3.1 Preliminary checks

Accurate preliminary checks carried out with time, are fundamental for a safe navigation. Some important elements to be taken into account when preparing for departure are listed below:

- Gather information on weather forecasts and warnings concerning the course to be followed;
- Verify the presence of documents and certificates to be kept on board during navigation;
- Consult the pilot book for details about the area you want to reach;
- Consult the navigation charts, in particular the distance, routes, dangerous sea bottoms and shallow waters;
- Calculate the quantity of fuel necessary for navigation, adding a stock fuel quantity;
- Consider the length and duration of the cruise;
- Check that the safety equipment on board is efficient, in a good condition and corresponding to the regulations of your destination;
- Check for the correct operation of the yacht's bilge pumps, which are basic for water drain in case of flooding; remember to activate the magneto-thermal switches on the secondary electrical panel, which allows the bilge pumps to start automatically;
- Check the cleanliness of the sea water strainers, essential for engines' and generator cooling, and for air conditioning and service feeding; in case they are dirty, it is necessary to close the sea water intake valves, by turning them in position perpendicular to the pipe, remove and clean out the frames, re-insert them and carefully close the strainers, then open the sea water intake valves again.

CAUTION

Once the hull valves have been reopened, make sure that no leaks are present.

- Check the tension of engine V-belts; if necessary, reset correct tensioning;
- Check oil level inside engines, gearboxes and generator; if necessary, top up;
- Check the coolant level inside engines and generator; if necessary, top up;
- Check the cleanliness of fuel air traps in the fuel system; in case of water presence, drain by means of the special tap;
- Check hydraulic oil levels on gangway, interceptor and steering system; if necessary, top up;

CAUTION

For checking fluids and for topping-up, please refer to the specific manuals supplied by the Manufacturers.

- Check liquid levels (fuel, fresh water) in the tanks;
- Check that everything necessary to take the sea has been loaded onboard (provisions, nautical charts, documents, signal rockets, first-aid kit, etc..);
- Check the proper fastening of all mobile components, on the main deck and lower deck;

- Check that the load distribution is such as to maintain the right trim of the yacht; storage of the galley and of other materials can change the trim, particularly the transversal trim: distribute the load evenly and secure it properly to avoid sudden movements;
- Create a checklist of safety equipment, as indicated hereinafter;
- Check that the life jackets are in good conditions and that they are stored where required and anyway easy to reach (avoid putting obstacles of any kind in front of access hatches);
- Check that the collective life raft is easy to access and that the holding line is in a good condition;
- Make sure that the life buoy is in its correct location and provided with the relevant line and light-emitting buoy;
- Check the charge status of the extinguishers: the extinguisher is charged when the pressure gauge indicator is in the green sector.

DANGER

The yacht's Owner must make sure that all passengers are perfectly aware of safety equipment (fire extinguishers, life raft, life buoy, etc..) location and use.

DANGER

Safety equipment should always be checked before each navigation, in order to ensure the good condition of the safety devices and to become familiar with their location and use. The little time necessary for this task can result very useful in case of need.

6.3.2 Operation tests

- Check the operation of the rudder (move it from end to end, check its correct operation, then return it to central position).
- Check interceptor operation.
- Operate both the interceptors. If not in use, the interceptor must be kept raised.
- Check navigation lights and horn operation.
- Check the efficiency of the anchor winch and chain stopper.
- Verify the efficiency of the instruments (plotter to the VHF, depth sounder (optional), compass).
- Check for the proper closing of portholes and hatches.
- Check operation of bilge pumps and relevant indication lights.
- Lighten moorings, ensuring no obstacle can hinder unmooring operations (not aligned cables, chains, anchor log engaged in other yachts moorings, etc..).
- Check that the engine room extractors are operating.
- Ensure no flammable or other improper materials have been stowed in the engine room.
- Check that the sea water intake valves for cooling engines, generator, air conditioning and fire-fighting system are open.
- Check that the cooling systems of engines and generator are operational (valves open).
- Ensure engines and generator fuel circuits are operational (open valves).
- Start the generator and, after a few minutes of pre-heating, give the electric charge to the generator by activating the utilities from the main control panel.
- Disconnect the shore plugs and cables.
- Connect the engine battery breakers.
- On the main electrical panel in the main helm station, check the battery
- Charge status and, if necessary, recharge them.
- Connect the 12V utilities on the electrical panel.

- Switch OFF unnecessary uses, after checking their proper operation.
- Start the engines with the inverters in “neutral position”.

CAUTION
The battery charger must be turned OFF with the engines running.

6.3.3 Start of propulsion engines

Before starting the new or overhauled propulsion engines for the first time, carefully read the technical documentation supplied by the Manufactures.
During the first operating hours, we recommended that the engines not be run at more than 3/4 of their maximum load; initial run-in should be at variable speeds.
After this initial run-in, the engines can be gradually brought up to full output.
Before starting the propulsion engines, always check that the sea water intake valves of the cooling system are completely open.

Also check that following levels are correct:
- Coolant level;
- Engine oil level;
- Fuel quantity necessary for navigation.

If necessary, fill with coolant mixture, oil and fuel.

CAUTION
Use only technical fluids approved by the Manufacturer, following the instructions provided by the Manufacturer.
Engines must always be started with inverters in neutral position and throttle levers set to minimum speed.

Activate and check the correct functioning of the following utilities:
- Starboard engine ignition keys;
- Port engine ignition keys;
- Air extractors;
- Navigation lights;
- Horn;
- Electronic set;
- VHF.

DANGER

Before starting the engines, ensure that nobody is standing in the dangerous area.

NOTE

The electronic engine start system does not involve actually inserting the keys into the key slot, but simply swiping the key (E-key) on the engine ignition.



Carry out the following operations for each engine.
Set the gearbox to neutral position by using the throttle installed in the helm station.

- Insert the ignition key in the OFF position and rotate it to the ON position. The engine is ready for operation.
- Press the START push-button, the starting engine is operated.
- Do not operate the starting engine for more than 10 consecutive seconds; if the engine has not started yet, release the push-button, wait for about 30 seconds and the operate the starting engine again.
- In order to repeat the starting procedure, the ignition key must be set to OFF again.
- Once the first engine has been started, only after having verified its regular operation, start the second engine too, by following the same procedure described above.
- After engine start, verify that the oil pressure rises to normal values within 10 seconds. If low pressure condition persists, immediately stop the engines.

CAUTION

If you are forced to use battery parallel to start engines, it is advisable to disconnect all unnecessary equipment to avoid voltage drops.

Long idle operation may cause cooling of the engine and subsequent bluish or white smoke. We therefore suggest avoiding long idle operation.
The slow run implies major wear of the engine mechanical parts and is the most harmful from the point of view of polluting exhaust.

6.3.4 Check after engine start up

After correctly starting the engines, it is necessary to carry out some operational checks.

- Check that, within 10 seconds from engine start, the oil pressure values stabilise.
- Check that there is no anomalous noise or excessive fume from the exhaust; otherwise, turn OFF the engines and contact the Assistance Service.
- Check that the alternators correctly recharge the batteries.
- Disconnect the 230V, shore cable, if still connected.
- Check for loose mooring ropes or floating objects hindering propeller movement.



DANGER

Make sure that no persons stand in front of gas exhausts and near the mooring ropes.

6.3.5 Engine drive

Despite the efficiency and the high performances of the yacht, and in particular the sensitivity to rudder motion, which allow an immediate response to the controls, the use of this yacht requires a careful and responsible behaviour.

CAUTION

Even if the automatic pilot controls the route, navigation must be supervised in any case.

In the passage between displacement and gliding navigation there is a critical phase to be carried out as quickly as possible, as it is characterized by high consumption and more vibrations; it also causes a very deep wake.
The minimum gliding speed is influenced by the displacement, the distribution of the weights on board, the position of the interceptor and the conditions of the sea.

CAUTION

Set the speed of the yacht and the interceptor position according to the conditions of the sea and the prevalent direction of the waves; in this way the structure of the yacht does not undergo to useless stresses and the passengers can enjoy more comfort during navigation.

The excellent choice and quality of the engines allows keeping high speeds for a long time with no consequences.

In order to achieve the best compromise between comfort and speed, while minimizing fuel consumption, it is recommended to keep the engine operating speed in the range between 1500 and 2000 rpm.

Do not keep the propulsion engines at idle for a long time; in this way they do not become “dirty” or overheated.
Avoid harsh accelerations or decelerations to avoid excessive stresses for the engine turbines.
When the yacht reaches the cruising speed, the engine check instruments should set to constant values.
If the instruments show contrasting or abnormal indications during continuous running, check the systems and the equipment.

WARNING
Avoid prolonged use of engines at low speeds to avoid overheating of exhaust pipes due to reduced cooling water circulation.

6.3.6 Stop of propulsion engines

Do not stop the engines immediately after a high-load operation, but let them run low (about 5 minutes) to balance the temperature differences.
The operations to be performed for engine stop are the following:

- Recall the throttle in central neutral position of the gear box;
- Turn the key to the OFF position;
- Disconnect magneto-thermal switches relevant to the start keys of both engines.

DANGER
Make sure that the engines cannot be restarted by unauthorized staff.

NOTE
With the engines stopped, carry out the following operations:

- Disconnect all unnecessary electric uses and check the electrical panel as well as the indications of the voltmeters and ammeters.
- Check the switches of the bilge pumps and their correct operation.
- Close the fuel supply line.
- Turn OFF the sea water handwheel (starboard engine).
- Do the hour meter reading and perform preventive maintenance according to the maintenance schedule.
- Check for possible leaks.
- Rinse the yacht with fresh water.
- Connect the electric supply socket from shore.
- Keep the air extractors running until they automatically stop.

6.3.7 Emergency stop of propulsion engines

Because of a mechanical or electric fault, the normal and useful procedures for stopping the engines could not be sufficient; it is therefore necessary to stop the engines with the EMERGENCY procedures.

- STOP buttons in the helm station:
  On the main helm station there are the EMERGENCY STOP buttons:
  Press and hold them until the engines stop.

- STOP buttons in the engine room:
  If is not possible to stop the engines by using the stop pushbuttons located in the helm station, operate the selector control “STOP” located on the side of the engine.



CAUTION

The emergency stop causes heavy stress to the engines with consequent hazard of component damage. Use the emergency stop only in case of real emergency.

DANGER

Before restarting the engines after an emergency stop, make sure to find and to clear the reason of the fault.

CAUTION

The engines emergency stop controls must be used only in case of real emergency.
Never use these controls during the normal engine stop procedure.

6.4 FIRST PERIOD OF USE

During the first period of yacht operation, in addition to the normal maintenance and check operations indicated in this manual, we recommend to carry out following additional operations and more accurate checks.
The duration of this period varies according to the frequency and use modes, such anyway to allow a correct run-in of all systems and components on-board.

CAUTION
We recommend consulting the technical documentation provided by the Manufactures of the various on-board systems and components; they can indicate operations, checks and specific times not included in this section of the Owner's manual.

Following the first period of use, the hereunder listed additional operations and checks, should be performed at longer time intervals, playing anyway an important role for the safeguard and reliability of the yacht and navigation safety.

- It is recommended that new or overhauled engines should not be operated at higher loads than 75% of their maximum load and at variable speeds. After this initial run-in, the engine should be brought up to full output gradually.
- After starting each engine, check for the correct circulation of the cooling water inside the circuit, by verifying that it comes out of the drains. Check also for the presence of leaks from the sea cock valves and strainers of the cooling circuits.
- Before the engines start, check the correct tension of the V-belts.
- Check the possible presence of anomalous noises from the engines exhaust.
- Before and after navigation, check for possible leaks in the shaft lines.
- During navigation monitor constantly the temperatures and operation pressures of the devices on board (propulsion engines, generator, gear boxes).
- Check, by means of indicators in the salon, the correct charge condition of the batteries starting the engines and services. Moreover, the engine alternators must correctly charge the batteries.
- Verify the rudders efficiency (by often checking the tiller angle) and interceptors.
- Before and after navigation, check the correct level of oil in following systems: steering system, interceptors, hydraulic gangway and bow thruster.
- After the generator start, wait several minutes before loading it. Bring it slowly to maximum performance monitoring its correct operation.
- Check the correct load level of all extinguishers (fixed and portable ones) installed on board; the indicator needle on the pressure gauge should be set in the green range.
- Check on the indicator of main pressure gauge, possible pressure drops inside the system.
- Check before and after navigation the correct operation of all bilge pumps on board.
- Check tightness and closure of portholes and hatches.

DANGER
Before performing the listed checks and maintenance operations, we recommend to read careful the Safety Rules relevant to maintenance, contained in this Manual.

CAUTION

Should more or less serious faults be noticed, contact the RIVA Service Department as soon as possible.

CAUTION

RIVA declines all responsibility concerning tampering carried out by third parties on equipment installed in the Shipyard. Such tampering or unauthorized installations will not only immediately void the warranty, but may cause damage to the yacht and injuries to the people on board.
RIVA declines all responsibility concerning periodical maintenance activities scheduled by the Shipyard or by Manufacturers, but not carried out, on equipment/components, for which it is necessary to refer to their own Technical Manuals.

WARNING

Avoid prolonged use of engines at low speeds to avoid overheating of exhaust pipes due to reduced cooling water circulation.

6.5 REFILLING

6.5.1 Fuel filling

Once the necessary fuel quantity to be filled has been determined, it is necessary to carry out a series of actions which will result in a safe and reliable refuel.
First of all it is necessary to stop all engines on board and the generator.
Have to clear and ready for operation the area around the fuel tank, where the tank cut-OFF valves are installed for precautional purposes.
Another simple yet important operation is to close, as far as possible, all openings towards the outside of the yacht (e.g. access doors, windows, portholes, etc..) near the fuel tank vents, in order to minimize the penetration of diesel vapours and odours into the rooms.
At the same time, in case there are passengers on board, it is necessary to forbid access to the area around the filling inlet and the air vents, and to provide a fire extinguisher and hydrocarbon absorbing material near them.
Before refuel, it is advisable to wet with water the teak in the area near the fuel filling nozzle. Once the filling inlet has been opened, it is possible to fill the tank.
The filling nozzle is located on the port side. Check that the filling pump is of suitable dimensions, and then insert it keeping it firmly.
While refuel, monitor the vents, in order to check for accidental fuel spillages due to the formation of air pockets and foam. In the final phase of refuel (at about two thirds of capacity), it is advisable to carry out frequent stops to allow foam to dissolve.



ENVIRONMENT
Do not disperse fuel in the environment in order to prevent pollution.
Dispose of fuel-contaminated polluting waste according to the rules in force.

CAUTION

The inlet plug carry the indication “DIESEL” to avoid accidental input of different liquids. To avoid damage to the system and tanks, we recommend refuel by gravity and not by pressure.

CAUTION

Refuel should be performed at the end of navigation, in order to allow fuel cooling down, without condense. Drain the tanks, every 2 or 3 refuel. Before refuel, wash the teak with fresh water to avoid its contamination with fuel.

CAUTION

For the type of fuel to be used, follow the manufacturer’s recommendations. Diesel engines require very clean fuel. Keep filters clean.

DANGER

Explosion/fire hazard

- Stow flammable material in a safety-approved container. Never stow flammable material in non-vented areas.
- Check bilge and engine room for fumes.
- Keep the ventilation system free of obstructions. Never modify the ventilation system.
- Inspect the fuel system for leaks.

DANGER

Explosion/fire/pollution hazard

Fuel system connections that are too loose or too tight can leak, resulting in fuel spillage, environmental pollution and explosion/fire hazard.

DANGER

Carbon Monoxide poisoning hazard

Ensure that the engine exhaust system operates correctly. Carbon monoxide is extremely toxic.
The exhaust system removes the combustion gas created by the engine and allows the correct ventilation of the stern.
Inspect the system tightness on a frequent basis. Leaks may permit carbon monoxide exposure.

Once refuel has finished, tightly screw the refuel plug and dry possible fuel drops with absorbing material.

DANGER

Fuel is flammable and explosive: do not approach with flames and do not smoke while refuel.
Carry out refuel with the engines shut OFF.
Failure to comply with these precautions may cause fires with hazard of serious damage to property and injury to persons.

6.5.2 Fresh water supply

To carry out fresh water supply, it is necessary to stop the engines and ensure proper mooring of the yacht.
Reach the filling nozzle located inside the peak, on the step giving access to the stern platform on the starboard side, and loosen the plug to open it.
During supply, pay special attention to avoid that any object falls into the filling opening.
When filling is finished, tightly screw the filling plug.



CAUTION

The inlet plug carries the indication “WATER” to avoid accidental input of different liquids.
To avoid damage to the system and tanks, we recommend refuel by gravity and not by pressure.
We recommend taking care of the tank’s hygiene, by pouring a disinfectant solution every two fillings.
Avoid leaving the tanks full of water in case of frosting risk.
Do not leave the yacht unattended while refuel.

CAUTION

Water and fuel filling plugs are tied to the structure by means of a steel wire, in order to prevent loosing or dropping them accidentally into the sea.

CAUTION

Before refilling the fresh water tank, check that the water supplied by the shore fresh water system is potable.

6.6 MOORING AND UNMOORING

6.6.1 Mooring operations

CAUTION

Before unmooring, make sure that all doors, hatches, portholes, etc.. are closed.

The ability to exploit such qualities depends on the “familiarity” the Captain has with his yacht. Practice is the only way to acquire confidence; with some exercise, in a short time, you will be able to safely perform mooring and unmooring manoeuvres even in very difficult or crowded areas or under unfavourable conditions.
A basic rule, that should always be applied, is to manoeuvre at low speed, in order to have enough time to react and to better evaluate the situation from time to time; thus, in case of unforeseen events, you will avoid damaging your or somebody else’s yacht.

Before unmooring, check the following:
- No other yachts are manoeuvring nearby;
- The mooring ropes are not damaged;
- That the fenders are positioned and well fastened (in case of wind or surf, provide a passenger with fender to avoid damage);
- That there are no floating objects or loose ropes which can damage the propellers;
- The shore power supply cable has been well retrieved and stored on board.
- Give up the peaks in the stern, mooring the dead body up to move away from the shore and manoeuvre for the exit.

If the mooring is on the side:
- Drop the mooring rope from stern, warp on bow rope to move away the stern from the shore, manoeuvre for way out.

NOTE

Clove hitch:

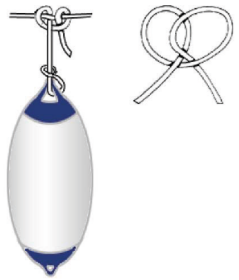

Is one of the most important hitches that anybody navigating at sea must know; it is the most useful hitch to fasten the fenders to the handles of the yacht.

NOTE

Cover the ropes of the fenders with leather in order to protect the fibreglass from possible rubbings.

CAUTION

Before starting the unmooring manoeuvres, disconnect the shore electric power supply cable.

CAUTION

Before the unmooring operation, ensure that engines, gear boxes, rudders and bow/stern thrusters are in good working order.
During such manoeuvres, the Captain should prevent any unpleasant noise, and/or wake that might bother other people.

CAUTION

The steering wheels of the helm station are not interlocked. Before starting the manoeuvre, make sure that the unused station is free from people who may interfere with the controls.

CAUTION

Before starting the unmooring manoeuvres, disconnect the cable for shore electric power supply.

DANGER

Check with extreme care that no one boarded is in danger (with legs or arms outside edge, in precarious balance or moving on wet or slippery surfaces) and that the fenders are well positioned and fastened.

CAUTION

Do not use the stern cleats as permanent mooring points.
They should be used only for the service tender or mooring of watercraft.
Stern cleats cannot be used for hauling tenders or chase yachts.



1. Bow cleats
2. Stern cleats
3. Half yacht cleats

Stern mooring diagram

LATERAL VIEW

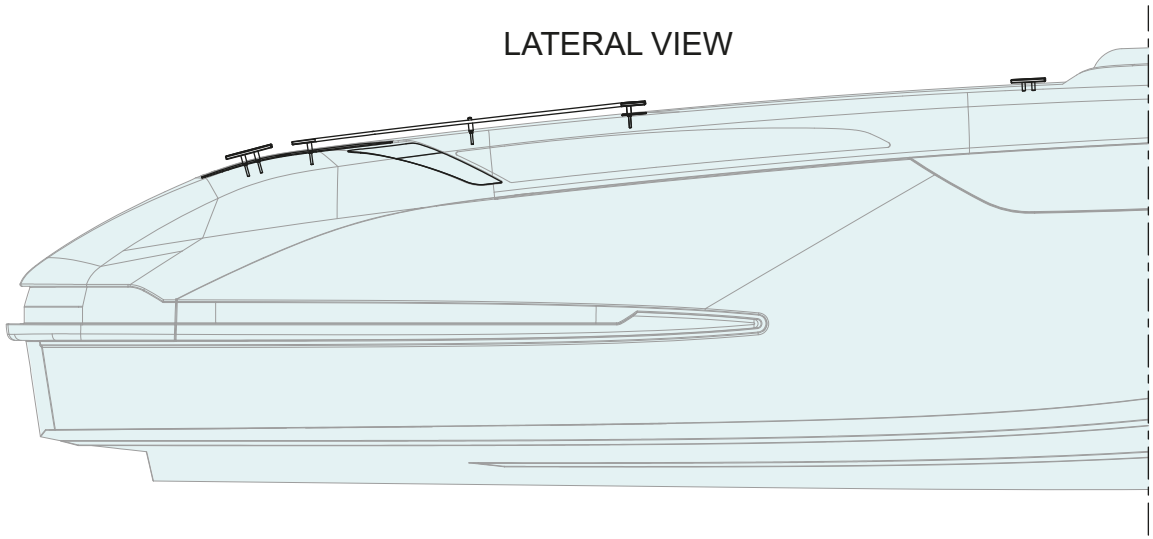

PLAN VIEW

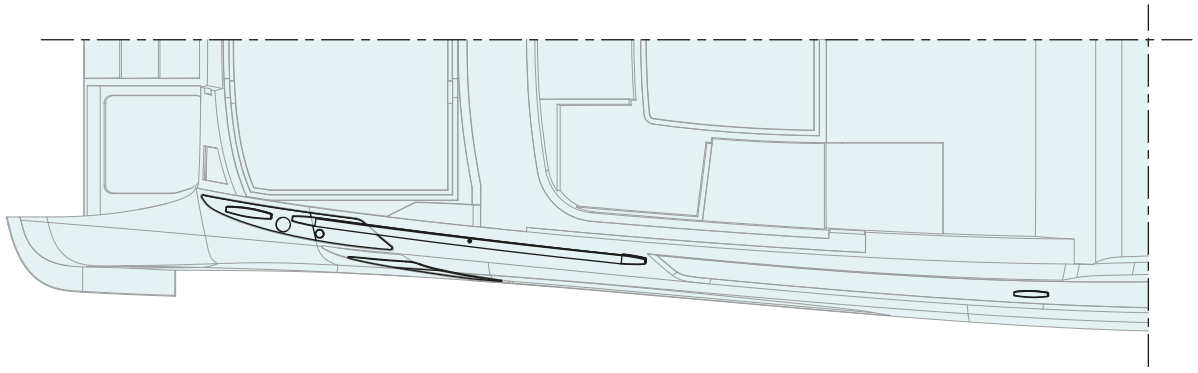

6.6.2 Leaving the mooring

The yacht is steered by means of the steering wheel, that operates the rudders (the rudder operation is independent from the engine operation).
In case of need and/or when in confined waters, manoeuvre the yacht by using the engines, changing the rpm or reversing their direction of rotation.
It is a good rule never to leave the steering wheel (the steering station), particularly when cruising at high speed or in confined waters.
Do not exceed the speed limits when operating in confined waters, harbours and wherever required.
Keep in mind that the rudders' effect is proportional to the propellers' rpm and to the yacht fresh way (especially with headway); as a result, with high rpm and high speed, the rudder response is high and quick, while when the engines are idling, with low fresh way, the reaction of the tiller angle is almost negligible.

6.6.3 Mooring operation

Before re-entering the harbour, check that:
- Mooring lines and fenders are ready for use and not hampering;
- The mooring point and the hauling course are free from approaching, mooring or departing yachts;
- All utilities necessary for manoeuvring are supplied on the main electrical panel (anchor winch, bow thruster, etc..). Disconnect all not strictly necessary utilities;
- Position the interceptors in a completely retracted position;
- Just before reaching the harbour, stop in free waters and test reversing gears and bow thruster;
- The yacht hook is easily accessible and does not hinder any passage;
- Acoustic alarm devices and the spotlight are working properly (in case of night mooring);
- In case of night mooring, have an operating torch light at hand;
- Bilge, grey water and holding tanks have been drained in the open sea;
- The passengers do not interfere with operations or, if participating, they know whom to listen to, what to do and where to go.

Proceed at reduced speed while approaching.
If the yacht is moored with the stern to the shore:
- Warp on stern ropes and on an anchor log, so as to haul the shore. Use the engines for short times, in order not to get strong headway or cause disturbance to other yachts already moored.

If the mooring is on the side:
- Warp on bow and stern ropes, so as to haul parallel to the shore.

Once moored:
- First take the measures listed in the description above, then stop the engines;
- Ensure that indication lights on the dashboard are OFF and remove start keys;
- Disconnect all unnecessary electric uses and check the general status of the switchboard as well as the indications of voltmeters and ammeters;
- Check the status of the bilge pump switches and adjust their default operation;
- Stop the generator once the necessary cooling time has elapsed;
- Connect shore electric power supply;
- Wash the yacht with fresh water.

Before leaving the yacht unattended for a long time, check that:
- Lower deck lights are not powered;
- Navigation lights and external lights are not powered;
- The riding light is powered;
- The switches of unnecessary devices (plotter, radio, anchor winch, etc..) are not powered;
- Devices necessary for loading and unloading operations are powered;
- The shore plug is properly connected and the cable is free from any hindrances;
- Safety equipment (life jackets, boathook, torches, etc..) have been stowed in their correct positions;
- On-board there are no bottles nor cases containing flammable liquids which are open or may fall/move;
- No food residues are left around (they could rot or clog scuppers, etc..);
- The gangway is in the right position and properly fastened;
- Mooring is correct (in case of bad weather conditions, tighten the mooring lines as much as possible and check that the distance from other yachts is appropriate; ensure fenders are properly fastened, etc..);
- Sea water intakes are closed;
- Portholes, internal doors and rooms lower deck and hatches in general are closed.

6.6.4 Unattended mooring

If the yacht is left unattended, it is necessary to check that:
- The sea water inlets of the sea water circuits are closed;
- The condition of the main electrical panels is correct and disconnect all unnecessary utilities;
- In all rooms on board portholes, doors, windows and hatches are closed;
- Bilges are clean;
- Grey and black water tanks are empty;
- Fuel suction pipes are cut-OFF;
- The yacht is safely moored.



DANGER

The shore electric power supply cable must be disconnected, especially if the yacht is left unattended for a long time.
Overboard outlets and drain pipes should be regularly checked, in order to ensure good buoyancy.
The electric system should be regularly checked, in order to prevent fires on board.

6.7 ANCHORING

6.7.1 Anchoring operations

Anchoring and mooring operations are extremely important for the safety of your yacht; they therefore need experience and special care.
When you carry out anchoring and mooring operations it is good to remember that your yacht may suddenly change direction due to gusts and particular sea conditions, or passing of other yachts close to yours.
We remind you that the anchor system has no safety stop devices; therefore, when the anchor is near the hawse, or when you intend to release nearly the whole chain, it is advisable to control the last metres of chain directly from the bow, using the special push-button control installed on the bulwark of the port fore peak.
In order to avoid overheating of the anchor windlass, it is advisable to help retrieval by moving, using the engines, the yacht slowly towards the chain, making sure that it does not damage the hull.



DANGER

Do not bring body parts or objects near the area where the chain or the lines are running. Make sure the electric engine is not supplied when acting manually on the anchor winch or when using the lever to release the clutch, as other people on board could operate the windlass from other helm station.

CAUTION

Before activating the anchor winch control, make sure the safety wire has been released.

CAUTION

After each use of the push-button control, make sure that the control is correctly stored in the special support located on the bulwark of the port fore peak.

CAUTION

Preferably operate the anchor windlass with the engines running to provide the high current required.

Your yacht can be equipped with a wire control for the movement of the anchor windlass with a digital chain counter.

Bow mooring diagram

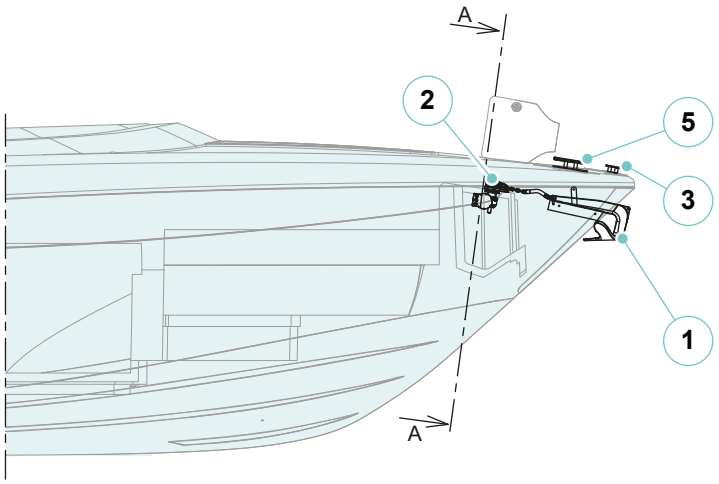

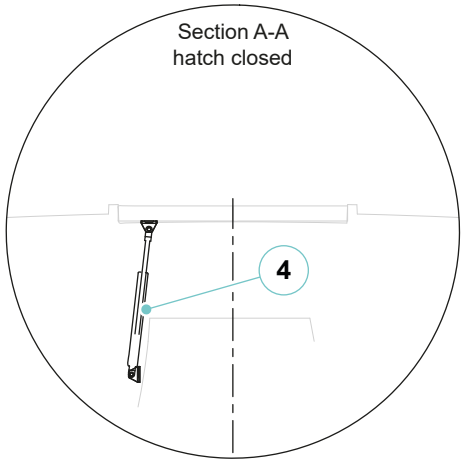

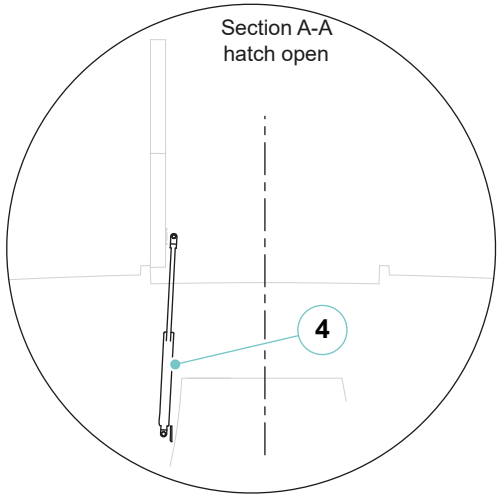

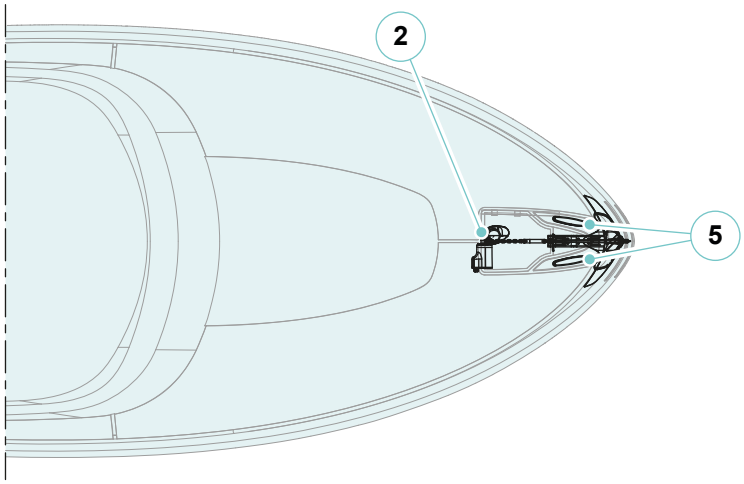

1 Anchor
2 Winch 12V
3 Bow hook
4 Gas spring
5 Bow cleat

6.7.2 Anchor weighing

Start the yacht's engine. Make sure the clutch is engaged and pull out the lever. Press "UP" on the push-button panel. Approach the anchoring point at low speed, in order to help the anchor windlass with its operation.
Never let the yacht being dragged by the anchor windlass towards the anchoring point. The chain's hoisting speed is proportional to the weight lifted.
Release the "UP" push-button to stop the operation. Pay maximum attention to the last metres of chain, in order to avoid that the anchor damages the yacht's bow.
If the anchor is stranded and the magneto-thermal switch has tripped, wait for a few minutes before resetting it and try again.
If the magneto-thermal switch trips again, it is advisable to move the yacht to release the anchor.

Before going underway, disconnect the anchor windlass power supply, lock it and mount the chain by means of the safety wire.



6.7.3 Anchor lowering

In order to drop the anchor manually, open the clutch and disconnect the safety wire. In this way, the wildcat will rotate freely around its own axis, dropping the chain into the sea.
Chain lowering may be stopped by rotating the emergency lever clockwise.
At the end of the operation, close the clutch.
Press "DOWN" on the push-button panel to drop the anchor electrically.
During electric anchor dropping, the operation is perfectly controlled and can be interrupted at any time releasing the "DOWN" push-button.

Once anchored, it is extremely important to reduce the stress on the anchor windlass, locking the chain by means of the safety wire.

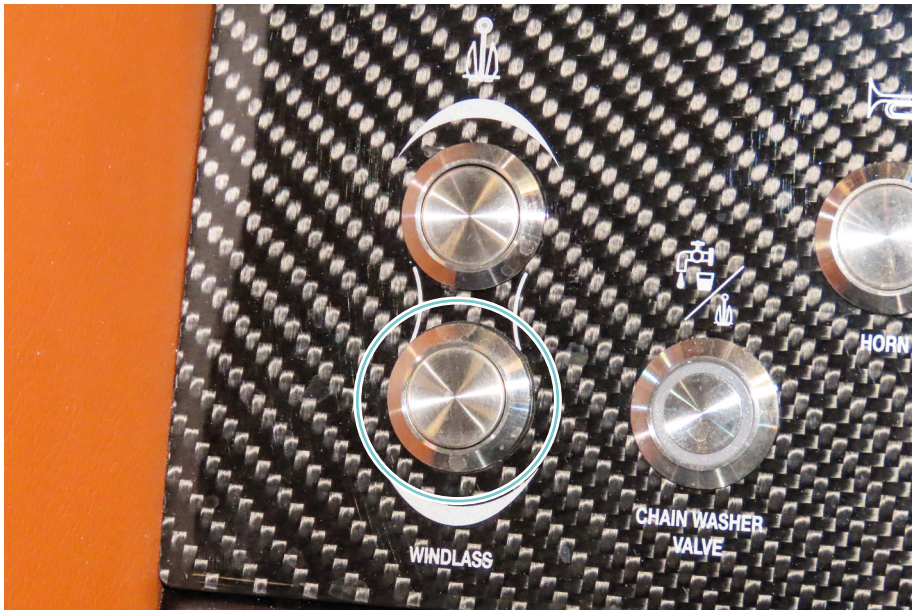



DANGER

Be very careful not to get too close to moving parts to avoid danger and injury.

CAUTION

NEVER cruise while the anchor chain has not been locked with the chain stopper and the safety wire.

CAUTION

Anchor the ship with the engines running, both for safety reasons and to compensate the electric consumption of the anchor winch from the batteries.
During anchor riding it is advisable to leave the anchor winch powered.
The distance from obstacles or other yachts must be, at 360°, greater than the length of chain dropped.
Do not suddenly reverse the anchor winch rotation.

CAUTION

In case of overnight anchor riding, ensure the correct operation of the white anchor riding light.
Before dropping the anchor, check the nautical charts: anchoring is prohibited in certain areas; with weed-covered sea bottom, anchoring is unsafe and harmful to the environment; with rocky sea bottom, the anchor may get stranded or lost.

CAUTION

The anchor and the chain may damage the yacht bow if the anchor winch is not operated carefully. We suggest carrying out the operation by means of the electric push-button panel located near the anchor winch; this shall allow checking the lifting and lowering speed of the chain and the entry and exit of the anchor shaft into the anchor roller.
During this operation, an excessive gliding of the chain or a wrong entry or exit of the anchor shaft into/from the roller may cause damage to the yacht's bow.
The anchor chain is fastened to the yacht by means of a line. In case you cannot remove the anchor from the bottom, by cutting the line you will be able to leave the chain and continue navigation.
The entire anchoring area must be free, in case of sudden variations of wind and/or current direction, especially in case of night anchoring.

CAUTION

We recommend to reduce load (chain and anchor) on the windlass, when riding at anchor.
You must use an appropriate size rope, fixed to the chain and then tensioned to a cleat.

6.8 SUGGESTIONS FOR NAVIGATION UNDER SPECIAL CONDITIONS

6.8.1 Navigation with bad weather conditions

Navigation safety depends mainly on the Owner's behaviour, who, according to sea conditions, shall either not set OFF or reduce the yacht's speed, sometimes considerably so as to face navigation at a more suitable pace.
It is very important during navigation with harsh weather, to make sure that all pieces of furniture, hatches, and mobile parts, are duly fastened or stowed, to avoid damages and above all to avoid hurting persons on board.
The reliability of the engines, also due to a perfect maintenance, the scrupulous check during the pre-navigation phase and an Owner of proven experience assume, under adverse sea and weather conditions, an even greater importance.
For navigation at night, as it is to be considered as navigation in particular conditions, all recommendations and cautions mentioned above apply.
Navigation safety is furthermore supported by a range of factors, as:

- Proper bottom shapes;
- Main engine with suitable reserve power;
- Effectiveness of rudders and interceptors;
- High stability of the yacht;
- Well designed and carefully manufactured structures;
- Special care for the yacht trim in all load conditions;
- Easily reachable safety equipment;
- Suitable navigation instruments (autopilot, GPS, echo-sounder (optional), etc..).



DANGER

Before undertaking navigation, it is necessary to know marine weather conditions which will be met on the route and at destination.

6.8.2 Significant speed - wave height table

The following table shows the maximum speed allowed in function of the wave height, in order to safeguard the yacht structural integrity.

CAUTION

RIVA declines all responsibility for the improper use of the yacht, in relation to the wave height conditions.

SPEED in knots	SIGNIFICANT WAVE HEIGHT in metres
10	0,80
11	0,70
12	0,63
13	0,56
14	0,51
15	0,47
16	0,43
17	0,39
18	0,37
19	0,34
20	0,32
21	0,30
22	0,28
23	0,27
24	0,26
25	0,24
26	0,23
27	0,22
28	0,20
29	0,20
30	0,19
31	0,19
32	0,18
33	0,17
34	0,17
35	0,16
36	0,16
37	0,15
38	0,15
39	0,14
40	0,14

BEAUFORT SCALE	DESCRIPTIVE TERM	WIND SPEED		PROBABLE WAVE HEIGHT (metres)	
		m/sec	knots	average	max
0	Calm	0 - 0,2	until 1	-	-
1	Light air	0,3 - 1,5	1 - 3	0,1	0,1
2	Light breeze	1,6 - 3,3	4 - 6	0,2	0,3
3	Gentle breeze	3,4 - 5,4	7 - 10	0,6	1,0
4	Moderate wind	5,5 - 7,9	11 - 16	1,0	1,5
5	Gentle wind	8,0 - 10,7	17 - 21	2,0	2,5
6	Fresh wind	10,8 - 13,8	22 - 27	3,0	4,0
7	Strong wind	13,9 - 17,1	28 - 33	4,0	5,5
8	Gale	17,2 - 20,7	34 - 40	5,5	7,5
9	Strong gale	20,8 - 24,4	41 - 47	7,0	10,0
10	Storm	24,5 - 28,4	48 - 55	9,0	12,5
11	Violent storm	28,5 - 32,6	56 - 63	11,5	16,0
12	Hurricane	over 32,7	over 64	14,0	

6.8.3 The wind rose

It is particularly used in meteorology since it concisely represents the distribution of wind speed by direction in a particular place.
It is a polar graph in which the points are coloured with bands corresponding to the classes of wind speed for each direction.
The length of the points changes depending on the wind frequency in each direction.
The simplest wind rose is that with 4 points formed by only the four cardinal points:

- North (N 0°) from which the north wind blows;
- East (E 90°) from which the east wind blows;
- South (S 180°) from which the south wind blows;
- West (W 270°) from which the west wind blows.

Four intermediate points can be established between the four cardinal points:

- North-East (NE 45°), from which the north-east wind blows;
- South-East (SE 135°), from which the south-east wind blows;
- South-West (SW 225°), from which the south-west wind blows;
- North-West (NW 315°), from which the north-west wind blows.

Therefore by listing clockwise the eight principal winds are:

NORTH (N)	0°	Tramontana north wind	It is very intense and often in bursts, usually very cold or even frozen. Usually it anticipates dry weather and clear sky.
NORTH-EAST (NE)	45°	Grecale or Greco	It blows from the north-eastern Balkans area although the name indicates an origin further south “from Greece”, due to the “Wind rose” position. As the Tramontana north wind, it blows in bursts. It is a cold wind and brings dry weather.
EAST (E)	90°	Levante east wind	It name indicates “where the sun rises” direction. It is rather weak and simply is an advance of the Scirocco and therefore an announcement of deteriorating weather.
SOUTH-EAST (SE)	135°	Scirocco south-east wind	The name indicated the Syria origin. It is a warm wind that creates rough seas and that it becomes very humid in the northern regions due to the passage on the Mediterranean sea. It indicates the arrival of disturbances.
SOUTH (S)	180°	Mezzogiorno or Ostro south wind	It is weak and on the Italian regions not very perceived except in the Adriatic sea.
SOUTH-WEST (SW)	225°	Libeccio south-west wind	The name indicated the Lybia origin. It born in a rapid way reaching also considerable force. It drops suddenly and usually remains a situation of good weather. When it blowing is annoying and dangerous for the navigation: causes a strong wave motion.
WEST (W)	270°	Ponente west wind	It indicates the sinking direction. It is more common in summer and usually blows in the afternoon. It indicates, however, good weather.
NORTH-WEST (NW)	315°	Maestrale north-west wind	The name refers to Rome, “Magistra” for the ancient people. It is a cold wind, stronger and more constant of the Tramontana. It sweeps away the clouds of disturbances and brings good weather, clear skies and dry weather.

These four winds combined with those coming from the four cardinal points form the wind rose to 8 points.
Among the eight points identified above can indicate other eight, intermediate between the earlier, resulting a wind rose to 16 points.
The new eight points are clockwise: north-north-east, east-north-east, east-south-east, south-south-east, south-south-west, west-south-west, west-north-west and north-north-west.

The maximum extension of the wind rose is divided into:
- Four quarters of 90°, which leads to a division into 4 points;
- Each quarter is divided into two winds of 45°, thus arriving at 8 points;
- Every wind is divided into two half winds from 22°30', thus reaching at 16 points;
- Each mean wind is divided into two fourths (or rhombs) from 11°15', thus reaching at 32 points;
- Every fourth is divided into two half fourths from 5°37'30", thus reaching at 64 points;
- Every half fourth is divided into two fourths from 2°48'45", thus reaching at 128 points.

In ancient times each compass had the image of a wind rose to 32 points on the background. The horizon was thus divided into thirty-second parts, which were called the fourth, they were used as the approximate unit during the approach manoeuvres (e.g. lay two fourths starboard). Due to the shape that is created in drawing them, they are also called rhombs.
Once in Italy, cartographic representations included a wind rose pointing to the cardinal points.
Today it is used to indicate the four cardinal directions and the component directions with (clockwise from North) : N, NE, E, SE, S, SW, W, NW, then with the terms Tr (tramontana north wind), G (greco north-east wind) + (a cross pointed to the east), S (scirocco south-east wind), O (ostro south wind), L (libeccio south-west wind), P (ponente west wind), M (maestro north-west wind).

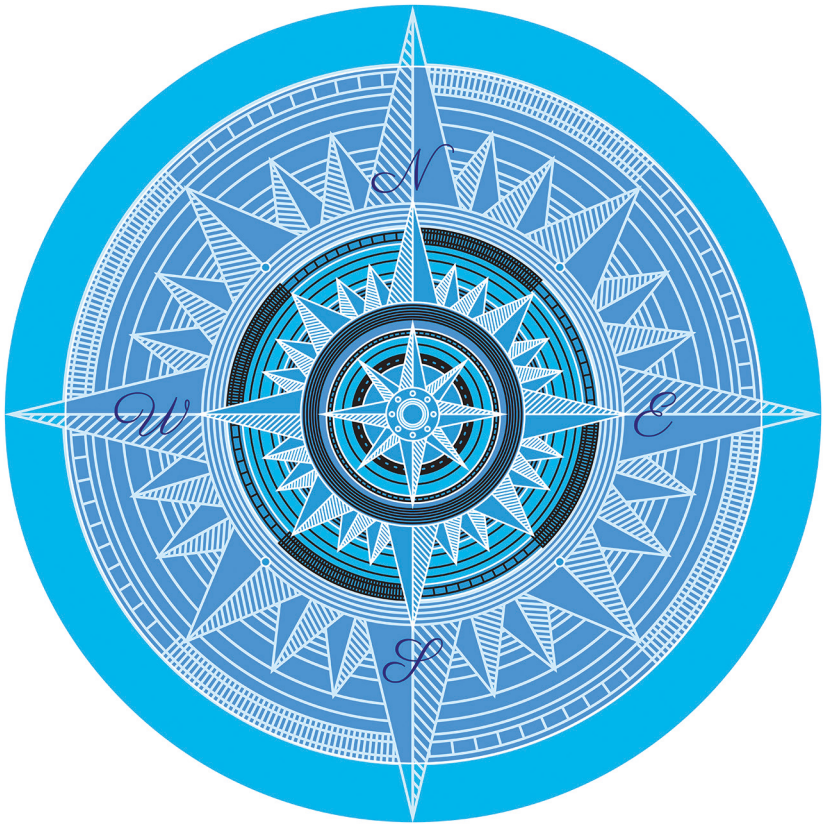

6.8.4 Wind classification

All types of winds existing on our planet.

Class	Name	Features
Constant Winds that blow throughout the year, always in the same direction.	Trade winds	They blow in the areas between the equator and the tropics: from north-east to southwest in the southern hemisphere, they are generated in tropical anticyclonic areas converging towards the equatorial zones.
	Extratropicals	They blow in the equatorial zones where, due to the heating, masses of hot and humid air ascending are formed.
	Westerly winds	They blow between 35° and 60° in correspondence of the temperate zones: from the south-west to north-east in the northern hemisphere, from north-west to south-east in the southern hemisphere. They are regular winds of the temperate zone.
Periodical winds Winds that periodically reverses the direction; they may be seasonal period, as the monsoons and Etesian winds, or in daytime period day as the breezes.	Monsoons (from the Arab word mausim, meaning season)	They are wind systems characteristic of the Indian Ocean and China seas; they blow during the summer semester (April-October) from the ocean (anticyclone) to earth (India and Asia north-eastern, cyclonic areas); during the winter months from India to the ocean (East Africa).
	Etesian winds (from the Greek word étos, meaning year)	They blow during the summer, from the Aegean sea to Egypt, and in the opposite direction during the winter.
	Breezes	Moderate winds in daytime period. They are distinguished into sea and land breezes: Blow throughout the day from sea to land and at night from land to sea, mountain and valley breezes: by day blow from the valley to the mountains and by night from the mountain to the valley; lake and shore breezws: they act as the previous.

Class	Name	Features
Variable or Local winds Winds that irregularly blow in the temperate zones every time that cyclonic or anticyclonic areas form.	Scirocco south-east wind (from the Arab word shulùq, meaning noon wind)	Warm wind that comes from the Sahara desert, proceeding from the south-west to north, becomes laden with moisture over the Mediterranean and reaches Europe humid and violent.
	Mistral (fronancient Provencal maestral)	Very cold wind that blows from the Central French Massif and reaches the maximum power in the Rhone valley.
	Fohn or west wind (from the Latin Favonius, favère, meaning to make grow)	Hot, dry wind that mainly blows in spring and autumn in the alpine valleys to Austria and Switzerland, and sometimes reaches the Po Valley.
	Ghibli (from the Arab word qibli, meaning southern wind)	Wind of the desert, very hot and filled with sand, which blows for about thirty days a year on the territories of Tunisia, Libya and Egypt.
	Khamsin (from the Arab word khamasin, 50)	Hot, dry wind that blows in the Nile Delta from April to June. Lasts 3 to 5 days.
	Harmattan (from the Sudanese word haameta'n)	Hot dry wind that blows very violent on the territories of West Africa. It coming from the north-west in winter and spring.
	Bora (from the Greek word boréas, north)	Cold and very violent wind that blows from the Illyrian mountains in the former Yugoslavia to the coasts of Istria and Dalmatia and also arrived in Trieste. It blows only in winter.
	Austro south wind (from the Latin auster, south wind)	Warm wind that blows from the south.
	Gregale north-east wind (from the late Latin Graecalis, of the Greeks)	Wind blowing from the north-east to south-west on the central and southern Mediterranean sea during the cold seasons.
	Maestrale north-west wind (from maestro as main)	North-west wind. It is one of the winds that predominate on the Mediterranean sea.
	Tramontana north wind (from Latin trans montanus, beyond the mountains)	Cold wind, sometimes violent, coming from the north in winter season and that can invest across the Italian peninsula.
	Libeccio south-west wind (from Libycos, coming from Lybia)	Wind from the west or from south-west, it is violent in all seasons. It blows over Corsica and on Tyrrhenian Italy.

Class	Name	Features
	Chinook (from the name of a Native American tribes of the north-west of the United States of America)	Hot, dry wind that blows from the north-west on the Rocky Mountains (USA) mainly in spring and autumn.
	Pampero (from pampas)	Cold and humid wind blowing from the west between July and September especially on the Rio de la Plata (Argentina).
Irregular or cyclonic winds.	Cyclones	They are defined irregular winds and are violently destructive with whirling motion; they take different names by town: Hurricanes in the Antilles and American coasts of the Atlantic, typhoons (from the Chinese t'ai fung, violent) in the Yellow Sea and the Philippines; Tornado (whirl, vortex) in the Great USA Plains and Australia.

6.8.5 Navigation with only one engine

Your yacht is driven by two powerful propulsion systems designed to operate together and at the same time. However, in case of failure of one of the propulsion systems, you may navigate with only one engine.
Therefore, we suggest you to:

- Shut OFF the failed propulsion engine;
- Adjust the position of the rudders in the opposite direction to the failed propulsion system: in case the steering wheels cannot contrast the asymmetric push of the operating system, lower the interceptors on the side of the failed system, and further reduce the speed;
- Head to the nearest landing at a reduced speed;
- Keep the yacht at a speed that allows the best manoeuvrability.

In case one engine stops due to a failure and the gear box is in idle position, during navigation constantly keep an eye on the oil temperature of the gear box connected with the failed system.
The propeller shaft continues rotating thanks to the water flow through the propeller; in this way, some parts of the reduction gear continue rotating.
Should the temperature excessively increase over 80°C, lock the propeller shaft by engaging the reduction gear: in this way, the resistance will be higher but, since the gear box is jammed, oil will not overheat.

DANGER

It is absolutely forbidden to perform reverse gear with one of the two engines stopped.
This operation is allowed only in case of life danger for the persons on board and for the safety of the yacht itself; however, the operating engine must run no faster than at 1000 rpm.

CAUTION

The yacht has been designed to navigate driven by two engines; please remember that it is possible to navigate with one engine only in case of emergency.
Go to the nearest harbour and alert the rescue team, if necessary.

6.8.6 Collision

In case of collision while underway, it is advisable to proceed as follows:

- Check the people on board and make sure that no one is injured.
- Immediately start the bilge pump and, if necessary, start the manual bilge pump, in order to reduce water entrance.
- Check for possible damage to the yacht's structure and evaluate the extent of the leaks.
- Slow down or stop the yacht in order to reduce water infiltration, or maintain your speed if you can keep the leak above the waterline.

6.8.7 Stranding

Stranding can be avoided paying attention to signalling buoys; shallow water is indicated by breaker waves when passing above a sand bank.

If your yacht strands, the seriousness of the situation depends on the violence of the impact against he seabed, and if the yacht remains stranded.

In case of stranding:

- Check for possible damage to the hull, to the propulsion system and to the steering system of the yacht.
- Check for leaks. If you are bilging, trying to stop the water from entering the yacht has priority on getting the yacht afloat.
- Evaluate the sea depth around the yacht and the type of seabed (sand, mud, rocks, etc..). This will help decide how to move the yacht.
- Evaluate whether tide or stream may help get the yacht afloat or if they contribute to running the yacht more aground.

6.9 ENGINE EMERGENCY SUCTION FROM THE BILGE

In the engine room there is the bilge emergency draining system, which operates with shunters, which allow using the sea water pumps, driven by the propulsion engines as draining pumps.
The diverters are valves which, in normal position, ensure the sea water suction for engine cooling, through the sea cocks and the sea water strainers. In case of emergency, operate the handwheels (**2**) of both valves, bringing them to the emergency position: the suction of the pumps, driven by the engines is then diverted directly to the bilge.
Should it be necessary to use this draining system, the bilge level must be checked continuously, because in case of complete drainage, the engines will be without coolant.

CAUTION

In case of emergency it is possible to suck the water from the bilge through the sea water pumps of each engine.

CAUTION

When the bilge is empty, remember turning the valves back to sea water intake position, in order to avoid damaging the engines.

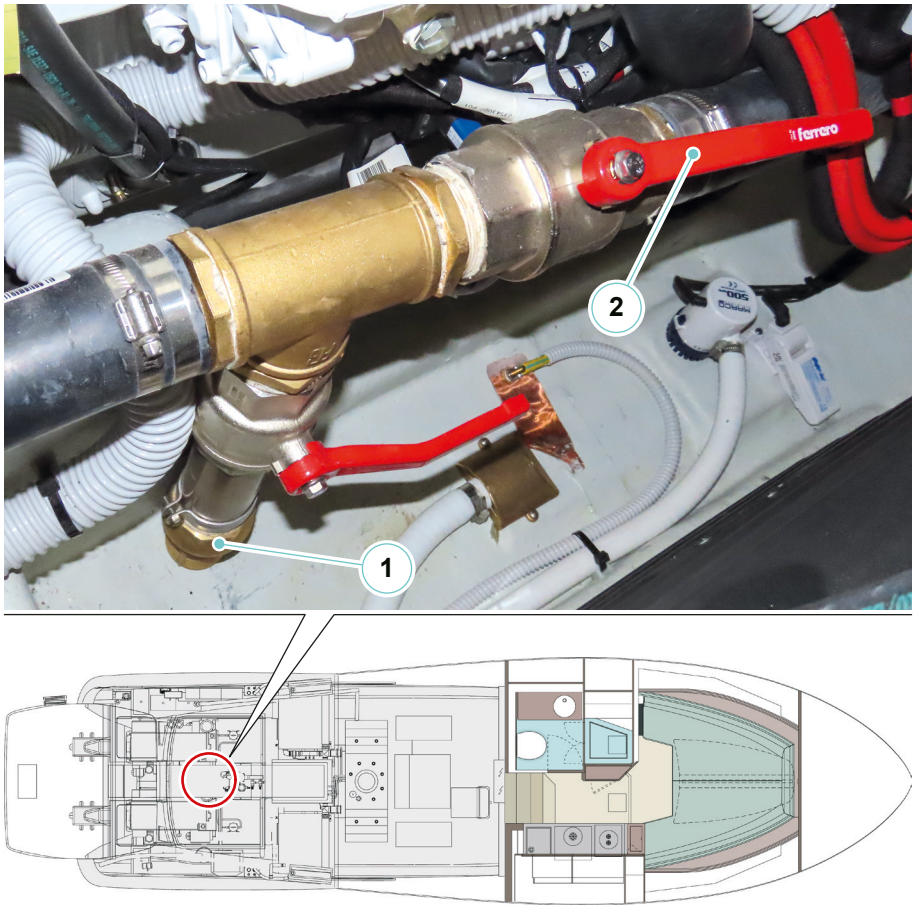

1. Bilge emergency suction cocks
2. Suction selection lever

6.9.1 Operating diagram

Normal operation

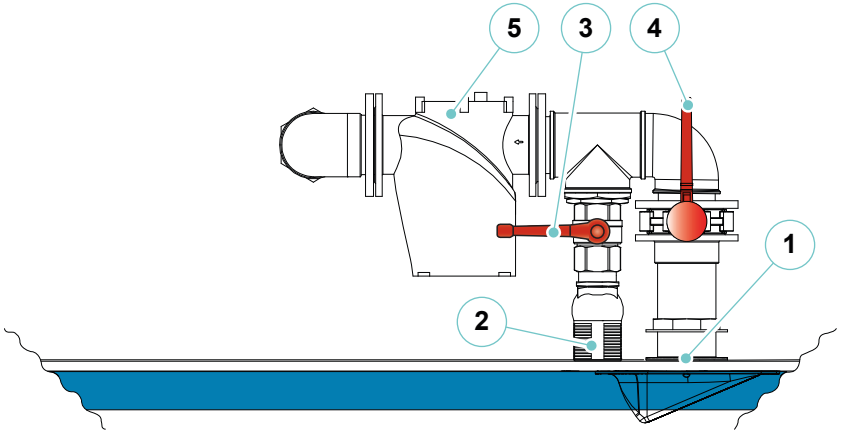

Emergency operation

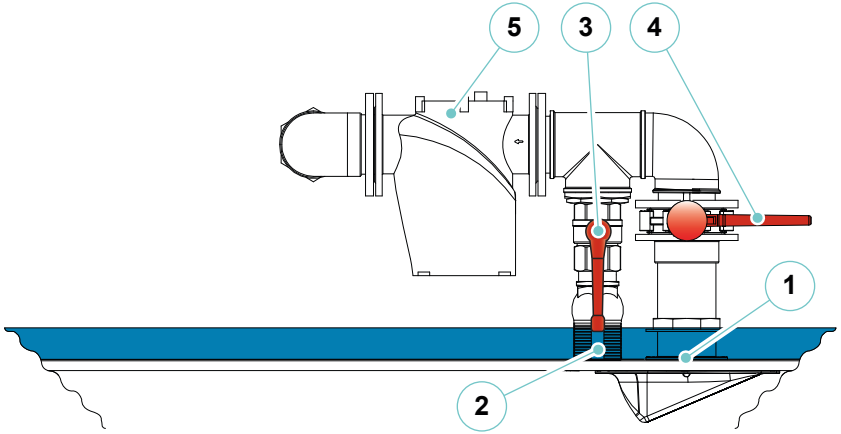

CAUTION

When the bilge is empty, remember turning the valves back to seawater intake position, in order to avoid damaging the engines.

CAUTION

In case of emergency it is possible to suck the water from the bilge through the sea water pumps of each engine.

1. Engine sea cocks
2. Bilge emergency suction cocks
3. Suction selection handwheel from the bilge
4. Suction selection handwheel from the sea
5. Engine sea cock strainers

6.10 HAULAGE AND LAUNCH

Before the haulage and launching operations, check that no foreign materials are on board, that all items are properly rigged and that nobody is on board.
To position the bow band, it is necessary to check the load conditions because, according to the on-board load when lifting, remarkable movements of the centre of gravity are possible.
Check stability before lifting the yacht: the centre of gravity of the yacht depends on loads and their arrangement.

CAUTION

The figure below shows in red the areas where lifting bands and transport cradles must never be positioned.



The lifting straps must not be worn out, and should be covered with suitable protections to preserve the bulwarks' gel-coat and the bottom hull antifouling paint.
The travel lift capacity must be greater than the yacht weight.
We recommend using a "spacer" to give the lifting straps an angle greater than hull width.
When ashore, the yacht must be placed on a cradle with at least five supports in the width and with a suitable size so as to evenly distribute the yacht's weight.
The hull inclination must be as "natural" as possible, e.g. it must be parallel to the waterline and not to the keel.
This to prevent that liquids on board keep a normal level and that rainwater can be drained naturally.

DANGER

During haulage and launch, never stay underneath or in proximity of the yacht.

CAUTION

RIVA declines all responsibility for damage to property and harm to persons caused by the wrong performance of the hereunder listed operations.
RIVA declines all responsibility for the location of the lifting straps, the lowering of the yacht to the ground and the support points carried out in other Shipyards.



DANGER

Hauling and launching operations must be carried out only by skilled personnel and in qualified Shipyards and under their direct responsibility.

CAUTION

In order to avoid damage to shafts and external appendixes, it is essential to lift the yacht in the correct way.
Do not put the lifting straps at the intakes, sea exhausts or other protrusions.
Lifting straps must be positioned according to the loading conditions of the yacht at the moment of its lifting, because these vary remarkably, for instance, when the yacht is unloaded and dry or when the yacht is fully loaded. The bow strap arrangement must be carefully evaluated each time, in order to prevent any damage to the yacht.

Cradles

RIVA S.p.A. is capable of providing the cradles for a correct support of the yacht (optional on demand). RIVA S.p.A. is not responsible for any damage resulting from the use of cradles different from those expressly produced by RIVA S.p.A.

Propping

It is a common procedure to use supporting props if no actual storage capacities are available. It is very important to take some basic precautions while positioning the supporting props for the yacht in order to prevent damaging the hull structures, accidental falls of the yacht or injury to the involved personnel.
The following list contains useful advice. We also recommend always having propping operations carried out by experienced personnel.

- Use props with adequate strength and stability (each keel prop must support at least 1/5 of the whole weight of the yacht).
- Use correctly dimensioned supporting plates to prevent negative weight concentrations.
- Place the props preferably next to transversal structural reinforcements (stringers).
- Locate the props along the supporting fins of the hull.
- Always place at least 5 props along the keel, 3 props starboard and 3 props port in order to guarantee stability and weight distribution.
- Start positioning the three keel supports along a straight line, appropriately spaced to distribute weight.
- It is important that the props have the same height in order to prevent that the load is concentrated mainly on one of them.
- Have the yacht lowered very slowly until it almost touches the keel props, adjust the height of the props until they are in contact with the keel, in order to guarantee a uniform load distribution and a neutral trim of the yacht; keep part of the weight supported by the crane.
- Position the adequately spaced lateral props; it is important to remember that the lateral props must guarantee stability, but the whole weight must be supported mainly by the keel props.
- Check the support for stability, then completely lower the yacht and remove the belts.

The suggestions above are to be considered as being generally valid for propping the yacht without damaging it or harming the personnel involved; however, since the propping conditions may significantly vary depending on the props used and the surface on which the props rest, the above suggestions must be adapted case by case. RIVA S.p.A. is therefore not responsible for any damage to the yacht occurring while the yacht is at dry shore on props.

CAUTION

RIVA S.p.A. declines any responsibility for the location of the lifting straps, the lowering of the yacht to the ground and the support points carried out in other Shipyards.

6.11 DRAWING AND TOWING

If, in case of emergency, you have to tow another yacht, we recommend passing a line between the fairleads of the stern cockpit, securing the two ends to the stern cleats.
The towing rope must be fastened in the middle of the rope in the bight with a bowline knot.
The length of the towing rope must vary according to sea conditions and to the mass of the yacht to be towed; anyway, the rope must not be shorter that three times the length of the yacht to be towed.
In case the yacht must be towed because it does not manage to navigate with its own means, direct a rope between the bow fairleads and fasten its two ends to the cleats.
The towing rope must be fastened in the middle of the rope in the bight with a bowline knot.

The length of the towing cable must be determined according to sea conditions; the cable must anyway not be shorter than three times the length of your yacht.
In case of emergency, if towing is not possible, give help by taking on board people from the other yacht, as many as possible, and reach the nearest harbour.
In any case, always immediately contact the Harbour Authority.
While towing, the water temperature and the oil pressure of the propulsion engines must be kept constantly under control.
While towing, keep a speed suitable to the operation type.

DANGER
Do not approach and do not carry out any kind of intervention on transmission during the towing because propeller can turn.

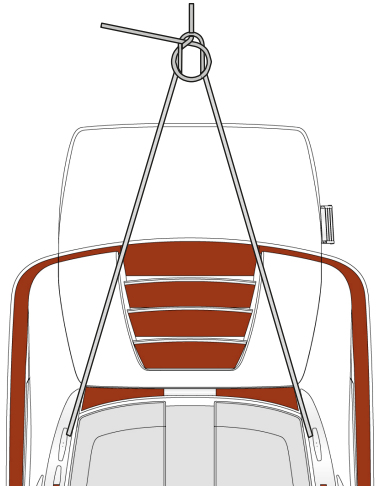

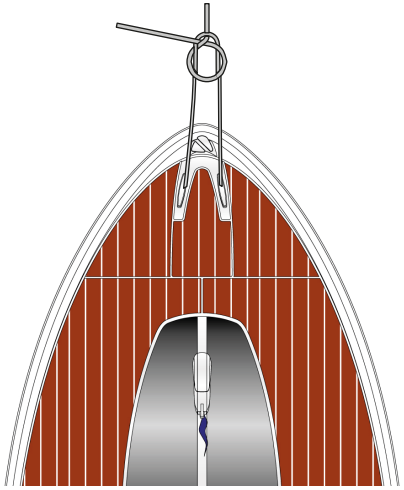

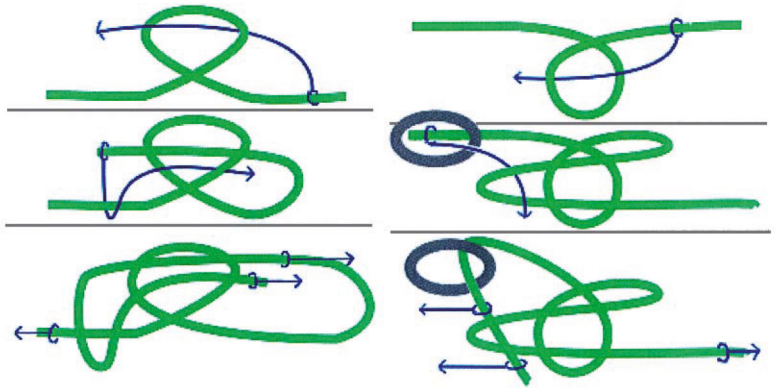

CAUTION

In case it is necessary to tow another yacht, do this under calm sea and calm wind conditions only, and tow yachts with a displacement not exceeding 50% of your yacht displacement; in case of emergency, if towing is not possible, give help by taking the people of the other yacht on board, as many as permitted and possible, and reach the nearest harbour.
Anyway, inform immediately the Port Authority.

CAUTION

Towing navigation can be carried out continuously for 8 hours, provided that you constantly monitor the gear box oil temperature, which must not exceed 80°C (176°F).
If temperature exceeds 80°C (176°F), stop navigation and wait until temperature lowers.
When the engine is shut OFF, the throttle position is unimportant.

CAUTION

Do not stand near the ropes during drawing (or towing) operations, a rope that breaks can be extremely dangerous (“whip lash effect”).

CAUTION

Tow or be towed always at low speed. Never exceed the hull speed of a drive displacement when it is towed.

CAUTION

Ensuring a top of the trailer so that it can be cleared when it is under load.

DANGER

During towing navigation, the propeller shaft has to be kept turning by the water flow through propeller. We recommend not to carry out any kind of service on the thrust devices (engines, gear boxes, shafts, etc..).

6.12 BIMINI TOP

Your yacht is provided with an electro-hydraulic bimini top to cover the cockpit area (standard).

The electro-hydraulic control unit which regulates the oil flow in order to allow for the bimini's movement is located in the system room.
To operate the opening/closing system of the bimini top, it is necessary to activate the relevant magneto-thermal switch located on the main electrical panel of the salon, in the 12V section.
In order to move the bimini top, press and hold the special spring pushbutton located in the helm station. The bimini top's movement shall be signalled by an acoustic alarm, which will stop when opening/closing is complete or when releasing the push-button.

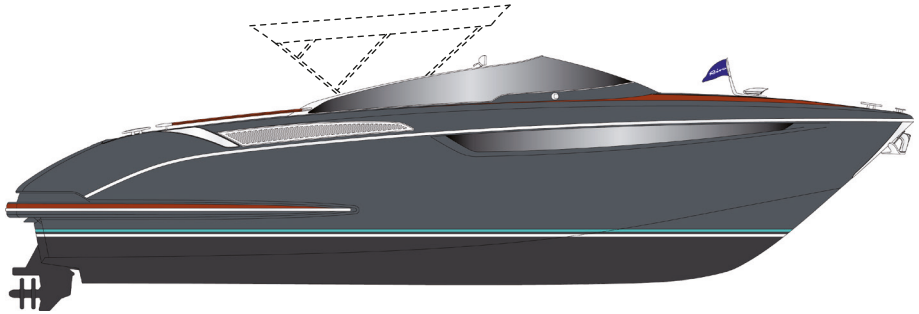

CAUTION

In case of pump fault, or power supply failure, it is possible to operate the bimini top by means of the manual emergency pump.

CAUTION

Do not open the bimini top during the voyage but only for yacht at rest, to avoid the "sail effect" which may damage the property or cause personal injury. Do not use the bimini top with adverse weather conditions.

NOTE

For further information on use and maintenance, please refer to the manufacturer's manual.

CAUTION

Never press the bimini top's closure spring push-button without having removed the stainless steel tie rods.

DANGER

During the opening/closing phase, the operator must pay attention in order to prevent passengers from standing in dangerous areas, especially in the bimini top's and central cover's moving range.

DANGER

Fully extract the bimini top by pressing and holding the relevant spring button, and only stop in case of emergency or danger.

CAUTION

To clean the bimini top canvas, do not use solvents which could damage the surface treatment of the tissue.

CAUTION

Never keep the bimini top open during navigation or with strong wind, because the moving structure could suffer serious damage.
Using the bimini top is only allowed with stationary yacht and with no wind, and with the fastening tie rods duly connected.

CAUTION

During bimini movement, passengers must remain seated on the cockpit sofas, in order to avoid that a possible balance loss leads them to catch hold of bimini parts not suitable to resist anomalous stress.

6.13 GANGWAY (OPTIONAL)

Your yacht is equipped with an electro-hydraulic aft gangway, for boarding the yacht from the shore. The movement is controlled by a control panel installed on the port side of the control station.
The electro-hydraulic control unit that controls the oil flow that allows moving the gangway by means of hydraulic cylinders is located in the starboard side of the technical room.

DANGER
NEVER start navigation if the gangway is not correctly retracted.

DANGER
The gangway, for boarding and leaving the yacht, shall be used only by one person at a time; make sure never to exceed the maximum capacity stated by the manufacturer.
Never operate the gangway when someone is passing on it; before activating it and during operation, make sure that no one is within its moving range.
When walking on the gangway, be cautious and keep hold to the handrail; as it is made of rope, it cannot be considered a rigid and safe support, but simply a help to keep balance.

NOTE
The gangway can be operated only with the hatch fully opened or fully closed.

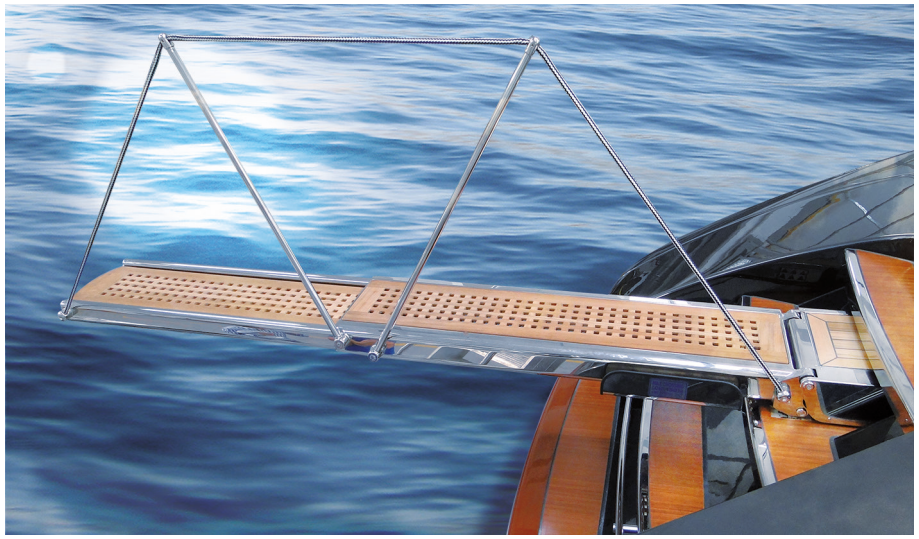



In order to move the gangway, operate the push-buttons located on the control panel on the port side of the control station.
Each gangway is delivered with one remote-control units (Manufacturer advised you to required one as a reserve in case of loss).
The remote-control units are fragile electronic devices that must be kept in a dry place.

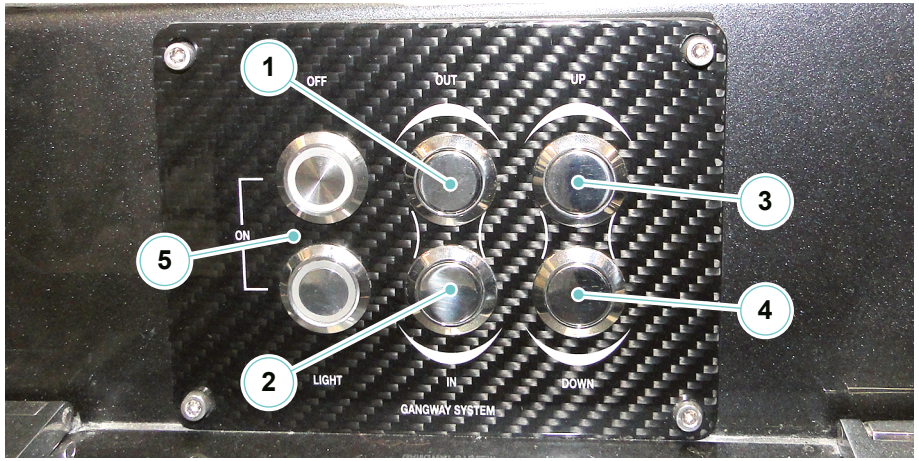

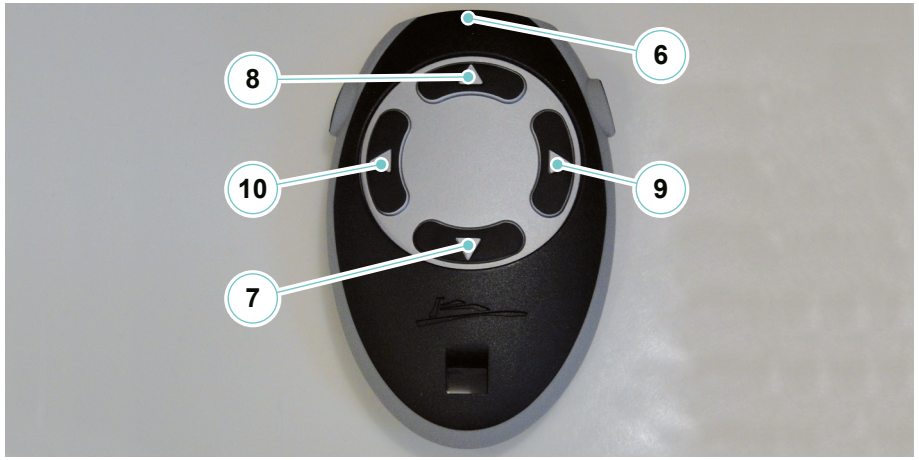

Gangway control panel and remote control

CAUTION

The hydraulic gangway, even if easy manoeuvrable, might damage people and things.
Its use is recommended only to well experienced people.

Telescopic movement buttons

1. Gangway extension
2. Gangway retraction

Gangway up/down buttons

3. Gangway lifting
4. Gangway lowering
5. Gangway lights activation

Remote controls

6. LED to confirm operates transmission
7. Operates the LOWERING of the gangway
8. Operates the RAISING of the gangway
9. Operates the RETRACTION of the gangway and the autoalignement
10. Operates the EXTRACTION of the gangway

NOTE

The remote controls are supplied as standard and have an operating range of about 10 m.

6.13.1 Manual operation of the oil control unit

NOTE

Position the gangway in such a way that it cannot touch the shore, either because of the normal yacht swinging or of the tide change.
Should the gangway strike against the shore, it could get seriously damaged.

To carry out the gangway motion by means of manual pump, proceed as follows:

- Go to the end of the desired solenoid valve and press the cap.
- Press and hold and activate the manual pump of the oil control unit in order to allow oil flow.

By shifting to the different ends of the solenoid valves you can perform all gangway operations manually.

NOTE

For further information on use and maintenance, please refer to the manufacturer's manual.

CAUTION

In MANUAL mode it is necessary to constantly monitor the position of the gangway during movement since the end of stroke sensors are cut out to collisions and resulting damage to the system or yacht.
It is necessary to check that the gangway is properly aligned with its housing in order to retract it.

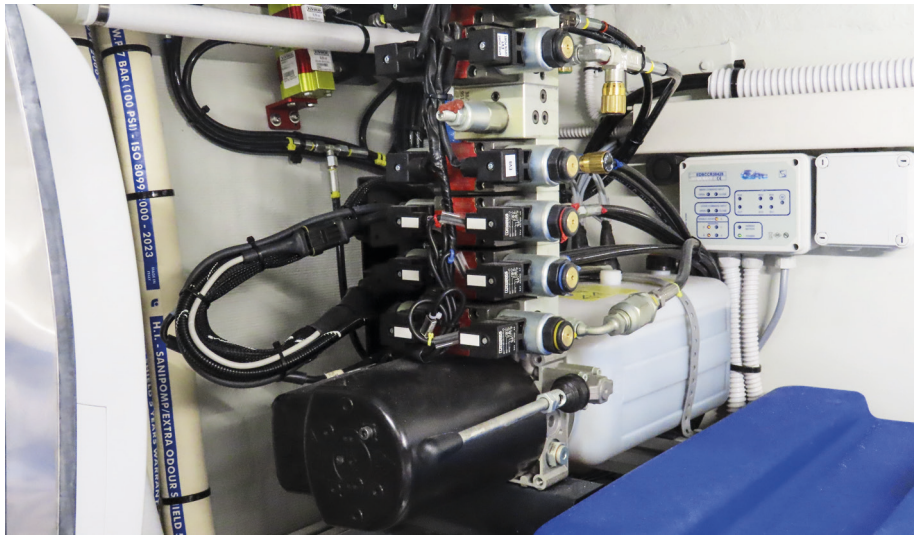

DANGER

All operations must be carried out under the supervision of the operator.

CAUTION

Always pay the utmost attention to the movements of the gangway; in case of emergency, press any button of the remote control or of the panel to stop the gangway.

CAUTION

The hydraulic gangway, even if easy manoeuvrable, might damage people and things. Its use is recommended only to well experienced people.

CAUTION

RIVA S.p.A. declines all responsibility concerning tampering carried out by third parties on equipment installed in the Shipyard. Such tampering or unauthorized installations will not only immediately void the warranty, but may cause damage to the yacht and injuries to the people on board.
RIVA S.p.A. declines all responsibility concerning periodical maintenance activities scheduled by the Shipyard or by Manufacturers, but not carried out, of equipment/components, for which it is necessary to refer to their own Technical Manuals.

CAUTION

Do not use the gangway as a springboard.

DANGER

Pay attention to moving parts and to your hands.

CAUTION

Use and suggest to passengers comfortable shoes and eventually help them with the boarding.

DANGER

Never use the gangway to lift persons, even though the same is provided and tested to lift much heavier weights.
Always make sure that the maximum load suggested by the Manufacturer is not exceeded (150 kg) [331 lb].
Never operate the gangway when someone is passing nearby.
When walking on the gangway, be cautious and keep hold to the handrail; as it is made of rope, it cannot be considered a rigid and safe support, but simply a help to keep balance.

DANGER

Never start navigation if the gangway in not correctly retracted. Make sure that the gangway, the swim platform hatch and the swim ladder are correctly closed, before undertaking the navigation.

CAUTION

Never use slippery products for the gangway cleaning.

CAUTION

Position the gangway in such a way that it cannot touch the shore, either because of the normal yacht swinging or of the tide change.
Should the gangway strike against the shore, it could get seriously damaged.

CAUTION

RIVA S.p.A. declines all responsibility for any accident to persons or damage to property caused by a wrong use of the device.

MAINTENANCE

At least once a week carry out the washing with fresh water and an accurate cleaning.
At least once a month:

- Check the oil level in the control unit, when necessary top-up;
- Check the possible presence of oil leaks and bleeding;
- Check the operation of the emergency pump;
- Check the possible presence of corrosion;
- Grease the pulley gliding races of the steel cable.

At least once every six months;

- Grease the swivel pins and the gliding sleeves;
- Tighten the locking bolts.

NOTE

The check and maintenance operations must be carried out by skilled technicians, instructed about the control unit operating conditions.

NOTE

The spares must correspond to the requirements established by the Manufacturer, this is obviously ensured with the use of original spares.

CAUTION

Always previously announce the gangway manoeuvring when there are people on the shore.

NOTE

Always manoeuvre maintaining eye contact with the gangway.

CAUTION

Never manoeuvre the gangway when people are present on the shore within range of the gangway.

6.13.2 Gangway system maintenance

Component	Maintenance	Notes and precautions
Gangway	Oil top up	Check the oil level inside the tank every month and anyway before each navigation. Top up keeping the oil level at about three-quarters of the tank's capacity, and using the type of oil recommended by the Manufacturer.
	Cleaning	The gangway, being in contact with water and saline, needs careful cleaning.



DANGER

During cleaning or maintenance operations, make sure that nobody can activate the gangway, thus causing serious injury to persons, by cutting off power supply.



ENVIRONMENT

Do not discharge hydraulic oil in the sea, but in the special areas for toxic waste disposal.

NOTE

Improper use of the gangway, altering of the flow calibration, disrespect of manoeuvring procedures described in this manual relieves RIVA of all liability.

6.14 SWIM LADDER

The yacht is equipped with a swim ladder which allows easy access from the sea to the stern platform, and vice versa.
The swim ladder is placed inside the stern platform structure, in order not to cause obstruction during navigation.
It is manually operated:

- Turn the ladder block **(1)** to release it;
- Pull the ladder **(2)** from its seat.

The swim ladder does not require ordinary maintenance; anyway, being particularly exposed to sea corrosion, it is advisable to wash it accurately with fresh water after each use.

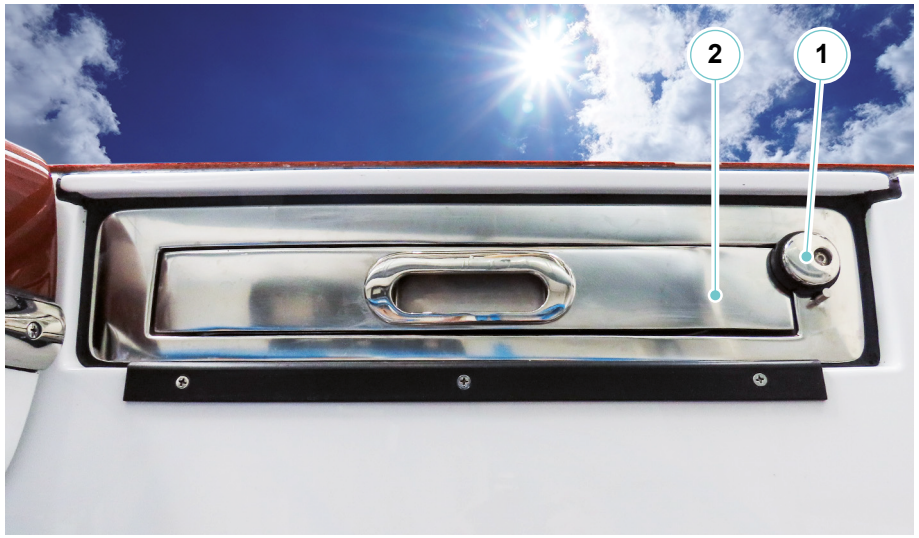

6.14.1 Inhibition sensor limit switch manual ladder and acoustic alarm

To extract the manual swim ladder located inside the hatch, the hatch must be opened.
When the swim ladder is removed, a position sensor prevents the closing of the hatch to avoid damaging the yacht.

In the case the sensor has a malfunction and inhibit the closure of the hatch, in the engine room has been installed a sensor by-pass command that allows to close the hatch after checking the effective closure of the swim ladder:

- A person must to monitor the progress of the movement to avoid possible interference between the swim ladder not completely closed and the closing seat of the aft hatch.
- The activation of the sensor by-pass command is signalled by an acoustic alarm which remains constantly active until the by-pass command is deactivated.



DANGER

Never use the swim ladder when the engines are running.
Pay utmost attention not to approach to the interceptor area, because they could be accidentally activated.
NEVER start navigation if the gangway in not correctly retracted.
With stationary yacht, it is compulsory to leave the swim ladder in the water, in order to allow a possible man overboard to board the yacht.



DANGER

Never access the stern platform during navigation, because it becomes a highly dangerous area.
Before operating the swim ladder, make sure that nobody is in its operation range.



DANGER

Risk of electric shock from leakage currents. Never swim in waters nearby harbours or marinas.



DANGER

Make sure that the swim ladder is correctly extracted and positioned before going down to water.

CAUTION

Pay attention because the ladder can be slippery. Ensure a safe grip before climbing on board.

CAUTION

Do not use the swim ladder as a springboard.



DANGER

Pay attention to moving parts and to your hands.

MAINTENANCE

At least once a week carry out an accurate washing.
At least once a month:

- Check for corrosion signs;
- Grease the pulley gliding races of the steel cable.
- Tighten the locking bolts.

At least once every three months, grease the swivel pins and the sliding sleeves.

CAUTION

RIVA declines all liability for any accident to persons or damage to property caused by a wrong use of the device.

6.15 YACHT STEERING RULES

Ship in sight
We consider three ways of sighting of another yacht at sea:

- Encounter, cross and getting ahead.

Generally, the yacht with limited ability to manoeuvre has the starboard of course.
We leave free the course and to pass it to stern. The yacht that has starboard of course is called privileged yacht. It can maintain its speed and course. The ship penalized is that must adjust their speed and/or course to maintain the due distance from the privileged ship.

Encounter

When you meet another yacht that goes in the direction parallel, both yachts must adjust their speed and course.

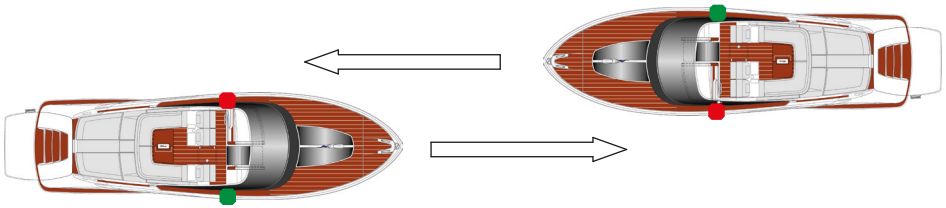

When two mechanical thrust yachts are meeting on intersecting or nearly intersecting courses such as to give rise to the risk of collision, each one must change its course to starboard so that each one passes on the port of the other.

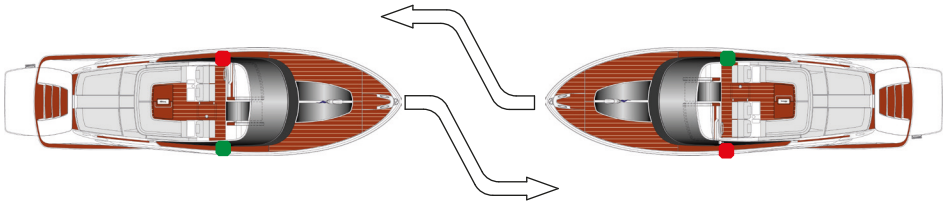

Crossing

When two mechanical thrust yachts are crossing, creating a risk of collision, the one that has the other yacht at its starboard must move away and, if the circumstances so permit, avoid passing on the bow of the other yacht.

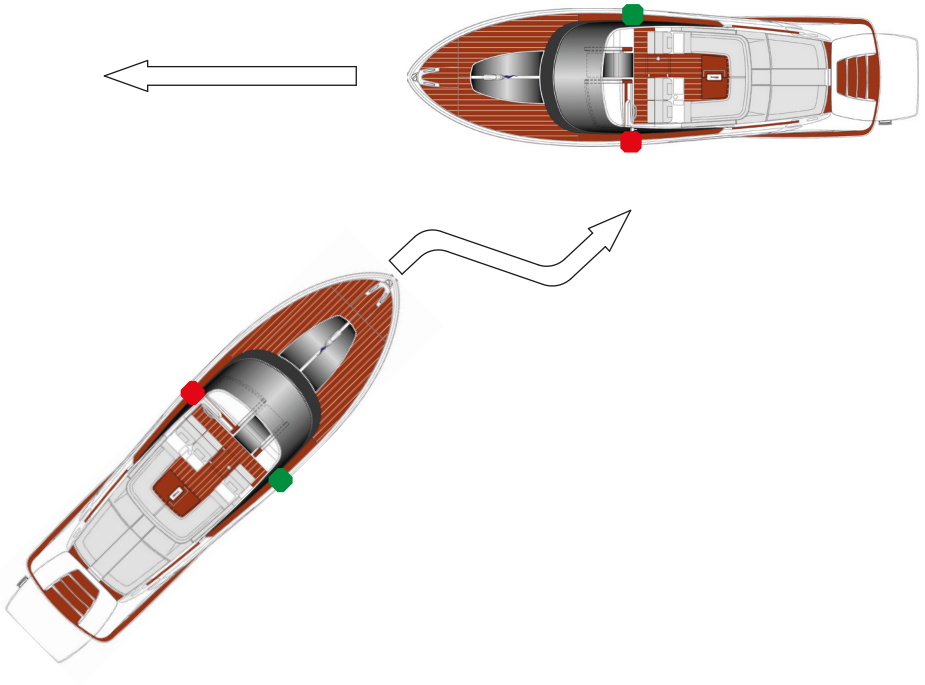

Overtaking

Overtaking is defined as when a ship coming from a direction of more than 22.5 degrees at stern compared to the yacht that it plans to overtake, such that it can only see the light of the yacht stern but neither of the two side lights.

If you find yourself having to pass a yacht proceeding more slowly than you and that is on your course, your yacht is the one penalized. Make all the necessary adjustments to avoid the collision and pass to the bow or starboard. Announce your intentions by sounding the horn twice if you intend to pass on the port, and one time if you intend to pass at starboard.

The yacht that is reached by another yacht takes precedence over the latter and therefore must maintain the same course and the same speed without laying or manoeuvring.

The yacht that has the bow within a 135° angle (formed by the yacht stern light) is considered the yacht that can be reached.

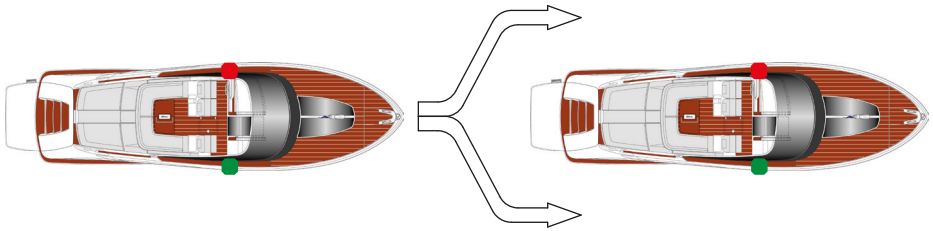

CAUTION

Having the right of course does not relieve you from the responsibility of avoiding a collision.

Who exits from the harbor: has precedence over who enters and who passes in front of the harbor.
Rivers and canals: who navigates with the current has precedence.

Evasive manoeuvre
The yacht that notices the other to its starboard and verifies that a risk exists manoeuvres in due time with a wide and easy to notice turn to starboard.
In the case it cannot turn starboard, it reduces speed or stops the engines.
When they are engine propulsion yachts, it must avoid turning to the port.
The yacht with precedence maintains constant course and speeds.
In the case the bearing changes appreciably, there is no collision course and the yachts maintain constant course and speeds.

Evasive manoeuvre in the case the obliged yacht does not manoeuvre
If the yacht that has precedence notices that the yacht obliged to give it precedence does not manoeuvre in reasonable time and spaces, at this point it has the duty to manoeuvre turning starboard until it makes a 360° turn, and then resumes its course.
The MINIMUM SAFETY DISTANCE from the other yacht to start the evasive manoeuvre depends on the yacht's displacement and ability to manoeuvre, the speed, visibility, traffic, weather conditions, and whether navigation is at night or in the daytime.
In any case it is a good rule of thumb to start the evasive manoeuvre well in advance, when the distance from the other yacht is still considerable, rather than waiting until it is too short.

Responsibility between yachts
It is necessary to observe the following regulations, except when in conflict with other rules:

Mechanical propulsion yachts navigating must leave the course free to:
- Yachts that are unable to steer.
- Yachts with limited ability to manoeuvre.
- Yachts busy with fishing.
- Sailing yachts.

Sailing yachts navigating must leave the course free to:
- Yachts that are unable to steer.
- Yachts with limited ability to manoeuvre.
- Yachts busy with fishing.

When navigating, yachts busy with fishing must, as far as possible, leave the course free to:
- Yachts that are unable to steer.
- Yachts with limited ability to manoeuvre.

CAUTION
Yachts with limited ability to manoeuvre usually have the right of course. In the event of an imminent collision, prudence has priority over right of course.

6.16 MAINTENANCE

6.16.1 General notes

The yacht is equipped with high quantity sophisticated devices and systems, which require not only a certain care of use, but also a periodical maintenance to obtain a correct operation.
One of the factors that might determine troubles or faults, is usually the irregular use of the yacht and as a consequence of this, of the on board devices.
The experience indicates that the regular use of the devices gives normally a less quantity of troubles, therefore, we recommend to have all on board devices regularly operate, for short periods.
Daily checks and periodical maintenance are important for maintaining equipment/components in the best efficiency conditions. If the periodical maintenance schedule is not correctly followed, the equipment performance can decrease, causing an efficiency reduction, a shorter life and the occurring of unexpected problems which can compromise safety at sea.
The maintenance schedule is based on time or running hours intervals.
For example, if a maintenance task is scheduled every 100 hours or 3 months, such task must be repeated at 200 hours or after 6 months, at 300 hours or after 9 months, and so on.
In case of a long inactivity period (for example during winter) it is advisable to lay up the yacht, possibly under cover.

NOTE
Some general information about ordinary maintenance tasks, their schedule and procedures is provided herein with.

NOTE
For further information on use and maintenance, please refer to the manufacturer's manual.

CAUTION
Check periodically that all equipment containing water is filled with the correct quantity of anti-freeze.
If the outside temperature drops below 0°C (-32°F), all fresh or sea water systems, are exposed to the risk of freezing and consequent breakage.
Systems especially subjected to risks of freezing are both the sea water systems (for instance the engine cooling system, the generator cooling system) and the fresh water systems (for instance the windscreen washer system, the fresh water pump, etc..), that is: all systems and devices containing either fresh or sea water.

CAUTION
Before carrying out any maintenance and adjustment operation on the yacht, turn all necessary safety devices on and consider informing all personnel, in particular persons operating nearby. In particular, place warning signs in the concerned areas and prevent that any device, if operated, can cause unexpected hazardous conditions, thus endangering the persons on board and/or property.
Do not scatter any type of waste in the environment, to avoid pollution, and only use the dedicated disposal areas in the harbours.

CAUTION
When working in the engine room, switch magneto-thermal switches of the bilge draining pumps OFF, to prevent that fuel, lubricants and other liquid spilling causes sea pollution.

CAUTION

RIVA declines all responsibility for the installation and operation of electric, electronic or mechanical equipment improperly installed by third parties in a fashion not authorised by the Shipyard.
RIVA declines all responsibility concerning tampering carried out by third parties on equipment installed in the Shipyard. Such tampering or unauthorized installations will not only immediately void the warranty, but may cause damage to the yacht and injuries to the people on board.
RIVA declines all responsibility concerning periodical maintenance operations scheduled by the Shipyard or by Manufacturers, but not carried out, on equipment/components, for which it is necessary to refer to the relevant Technical Manuals.

6.17 LONG YACHT INACTIVITY

Following list only represents a general guide to give the customer an orientation on the ordinary maintenance which should be carried out when the yacht remains stationary for a rather long period without being used. We recommend carefully checking the instruction manuals of the single devices, because they often contain detailed information and very important specifications relevant to the maintenance of each device.
Following instruction NEVER REPLACE the specific instruction concerning each single device and issued by the device's Manufacturer.

- **Engines**
  Before winter time, let fresh water flow into the sea water line, check the antifreeze liquid in the fresh water line and the protection anodes against galvanic currents. Remove possible traces of salt and spray with protective sprays. Check oil and fuel filters and replace them if necessary. Carry out a maintenance schedule for the propulsion engines as indicated by the Use and Maintenance instruction delivered by the Engines Manufacturer.
- **Power generator**
  Use same procedure as for the engines.
- **Gear boxes**
  Carry out maintenance schedule for gear boxes.
- **Batteries**
  Check the liquid level and periodically charge the batteries, protect the terminals with vaseline grease; even better would be to disconnect the batteries from the system and to charge them periodically with a separate battery charger, but this is not always possible on yachts.
- **Sun-deck cushions**
  Remove all sun-deck cushions and store them into a dry place.
- **Aluminium and steel**
  Wash all metallic parts with fresh water and protect by rubbing with a rug soaked into Vaseline oil.
- **Wood and inner tapestry**
  Cover the cushions of sofas with cloths and above all cover all windows with the relevant covering cloths, so that as less light as possible is projected inside, because the UV-rays fade the wood and tissue colours.
- **Teak wood deck**
  Wash with water and neutral soap and treat with proper products. If strictly necessary sandpaper.

WARNING
DO NOT USE mechanical or forced water jet equipment (e.g. pressure washers, etc..) to wash the deck, as this force alters the wood and the caulking sealants (it detaches the microparticles) causing damage in some cases even radical (e.g. detachment of the staves).

WARNING
DO NOT USE alkaline-based or acid-based detergents or aggressive detergents (soda, solvents, ammonia, etc..) to wash the deck; their aggressive degreasing action corrodes the wood (it eliminates its natural water repellency and whitens its natural colour), while the caulking sealant modifies its physical-chemical qualities, softening the surface, damaging the waterproofing, sailing and anchoring of the deck.

- **Sacrificial anodes**
  Verify their wear and if necessary replace the hull, propellers shafts and interceptors, sacrificial anodes, etc..
- **LOG Transducer**
  Pull out propeller, clean it and insert the proper propeller plug.
- **Windscreen wiper**
  Wash with fresh water and lubricate them with Vaseline oil.

- **Anchor winch**
  Check the oil level in the gear box, where possible. Protect the electrical components with a suitable protective spray and lubricate with silicon grease clutches and wildcat.
- **Air conditioning**
  Before winter:
  - Let fresh water flow in the sea water system.

  After winter:
  - Check the anti-freeze mixture in the fresh water circuit: top-up or replace it if necessary (perform replacement at least every two seasons).
  - Carry out the maintenance operations suggested by the Manufacturer.
- **Grey water tank**
  Pour into the washbasin, showers and bidets drains sterilizing products. Empty the tank and clean verifying the floating efficiency.
- **Black water tank**
  Pour into the toilets a sanitary product containing Paraformaldehyde (available in the camping equipment shops) and rinse with this mix the tank for a couple of times. Drain the tank completely.
- **Thrusters (optional)**
  Protect the electrical components with a proper spray and check the oil level.
- **Electro-hydraulic control units**
  Protect with proper sprays and check the oil level.
- **Refrigerators**
  Cleaning and protection for the outer one, should the yacht remain in the open.
- **Fire extinguishers**
  Verify the loading condition and expiry date of periodical checks.
- **Safety equipment**
  Check the expiry dates of the self-inflatable means, flares etc..
- **Water tanks**
  Wash with disinfectant, drain the fresh water circuit, especially if frost is forecasted.
- **Fuel tank**
  Carry out cleaning by means of a decanter especially if there are traces of water into the fuel.
- **Engine room**
  As to the engine room, we suggest to carry out a general cleaning, by removing all traces of salt drifts on devices and protect all electric, mechanic and hydraulic devices, by spraying them with protective agents.

6.17.1 General rules

- Check all deck lights.
- Clean all cabins and inspect all dunnages on-board.
- Check all hatches seals and lubricate their contact with appropriate silicone lubricant.
- Clean fan coils with an air jet, sucking the dust from the back net.
- Inspect the outer hull and all components: propeller, sacrificial anodes, shaft lines, struts, rudders, interceptor, fan coils, sea cocks, bow/stern thrusters.
- Carry out laying up of the yacht in a sheltered and dry place. If the yacht is stationed outside, cover it with a waterproof sheet, in such a way that allows ventilation. Otherwise the formation of damaging moisture could be helped.
- Wash the yacht with fresh water.
- Check all systems and fastenings on the yacht: damages, wear, cracks are signs of unsuitable use. Repair the damaged equipment. If necessary, fit new ones.
- Disconnect all unnecessary uses.



DANGER

During recharge the batteries produce explosive gas. Do not approach to recharging area with free flames or sparkles.
Avoid wrong connections; never connect a positive terminal (+) with a negative one (-).
During battery recharge, remove the caps of the relevant elements.

6.18 RE-USE OF THE YACHT AFTER LONG INACTIVITY

Engines

- Check engine and gear box oil and change, if necessary. Check oil and fuel filters and replace them if necessary.
- Adjust the tension of the alternator belts both of the propulsion engines and of the generator.
- Fill the fuel tank. Vent the air of the fuel system.
- Start propulsion engines.

NOTE

After a long yacht inactivity, carry out all above-listed operations and following checks:

- Check the condition of all hoses and connections of the steering system, interceptor, gangway.
- Start the engines.
- Stop engines.
- Clean fuel filters. Replace engine oil filters and add oil to the engines if necessary.
- Check all bilge pumps and their operation.
- Check the operation of the black water, grey water and sea water pumps.
- Check the operation of all board instruments used for navigation.

- Let the engine run at middle speed for some minutes, before letting them run at full speed.

Generator

- Start the engine of the power generator.

Hull

- Check hull condition.
- Have the bottom hull accurately cleaned, as well as the rudders and flaps with brushes (water) or a jet-cleaner (dry) to remove seaweed and scales.
- Have the paint of the bottom hull checked. If necessary, have 2 coats of suitable antifouling paint applied by specialized personnel.

Thrusters and sacrificial anodes

- Verify the thrusters condition and possible leaks from the seals of the shaft lines, if necessary adjust them.
- Check the conditions of the sacrificial anodes; if necessary, replace them.

Batteries

- Check the loading condition of the batteries, and that their terminals and housings are dry and clean.

6.19 HULL MAINTENANCE

Component	Maintenance	Notes and precautions
Bottom hull	Periodical cleaning and check of antifouling treatment (as required according to stationary area, but at least every three months)	The length of the antifouling effects depends mainly on the conditions of the waters where the yacht is stationary. **NOTE** To remove the old antifouling, do not use sandblasting methods, as it may damage gelcoat surface and the anti-osmosis resin applied by the Manufacturer. As suggested by the antifouling manufacturers, use paint removers or, as an alternative, wet sanding.
	Check/restoration	
	Preparation of the surface of an already treated yacht	The Shipyard uses high-quality ant-fouling paint and applies two layers. **NOTE** Bad maintenance condition (barnacles, etc..) may cause cavitation and damage shaft, rudders, propellers, etc.. **NOTE** Small areas of paint may peel OFF from the propellers even after a short period of operation.
	Washing of the yacht	Wash at each re-entering from navigation. Only use neutral and biodegradable products in case of dirt stains.
External coated parts	Cleaning	Do not use abrasive or cutting means. Wash at each re-entering from navigation.
Exposed metallic parts	Cleaning	Wash with fresh water and dry with moistened (wash leather) cloth. When re-entering from navigation, wash with plenty of fresh water, especially the handrail base, the windows, the skylights, etc.. **CAUTION** Also in presence of rusty spots, ALWAYS avoid using brushes or abrasive rags on metal parts. Such a treatment would scratch the surface, damage the polishing of metal parts and reduce their mechanical features.

6.19.1 Bottom hull

ANTIFOULING TREATMENT
If scales build up on the hull, these cause a remarkable speed reduction and with time may damage the “gel coat”. When you choose an antifouling paint for your yacht, it is important that you find the proper product, suited for your yacht and for the waters in which you are going to navigate. Contact the RIVA Service Department.

CHECK/RESTORATION
The cleaning and checks have to be carried with yacht at dry shore or with the help of a diver. Have the repairs done only with yacht at dry shore.

CAUTION
To clean and check the yacht in water: disconnect the engines and generator start.

CAUTION
There are some hull areas (fastening area of thruster shaft support base, submerged drainage areas, areas around thruster tunnels and shaft exits, etc..) where operations can be carried out after hull pressing; in these areas, fillers are usually used which, over time, may produce local faults, like bubbles or small cracklings. These little faults do not impair the hull mechanical strength at all. To repair them just sandpaper the area, remove the bubbles, and apply fillings suitable for the bottom hull.

- Have the bottom hull accurately cleaned, as well as the rudders and interceptor with brushes (with water) or a jet-cleaner (dry) to remove seaweed and scales.
- Let check the paint situation of the bottom hull. If necessary, have 2 coats of suitable antifouling paint applied by specialized personnel.

Preparation of the surface of an already treated yacht
Carefully check the old anti-fouling paint to see if it is still good or if it needs a new layer. Verify that the new product is compatible with the old one. Contact the RIVA Service Department. If the old antifouling is crusty, thick and tends to scale OFF, then remove it and start the treatment as for a new yacht.

CAUTION
Antifouling is poisonous and should never be burnt, use only authorized disposal procedures and in case of doubts contact the authorities in charge. The sandblasting operations and removal of antifouling must be carried out with suitable clothes and protections.

CAUTION
During the application of antifouling, make sure that following parts of the bottom hull are not painted:
- Depth sounder transducer;
- LOG propeller;
- Sacrificial anodes;
- Shafts and propellers.

6.20 GENERAL MAINTENANCE

Component	Maintenance	Notes and precautions
Gel-coat **CAUTION** The alteration of colour and brightness in correspondence of areas which are highly exposed is considered as normal. The necessary polishing has to be considered as normal maintenance. **NOTE** At least once a month perform an accurate cleaning of all fibreglass parts. At least once every six months check the status of the fibreglass. When necessary, but at least once every two years, polish all fibreglass parts.	Formation of bubbles Periodical cleaning (as required)	In some areas of the yacht, bubbles may generate on the gel-coat; these bubbles can break over time, thus exposing the fibreglass underneath. The drawback occurs generally in vicinity sharp angles, and depends on air bubbles that, during fabrication, remain entrapped between fibreglass and gel-coat, although quality checks are carried out by specialised personnel. Broken gel-coat bubbles are easy to repair by filling the voids and touching up with gel-coat that can be requested to the Service Department of the Shipyard. **CAUTION** Always wash using neutral products. In case of particularly persistent dirt, do not use products containing ammonia that turn the surface yellowish.
	Formation of cracks Periodical cleaning (as required)	When underway, some structural parts of the yacht are subject to bending, and create tension or compression stresses in fibreglass and on the gel-coat; the different elasticity of gel-coat and fibreglass can cause small cracks on the gel-coat surface, in particular in the most stressed areas, e.g. near cleats, stanchions, etc.. This problem, however, does not jeopardize the mechanical and structural characteristics of fibreglass. **CAUTION** To remove possible gel-coat, do not use sandblasting methods that may damage the surface of the anti-osmosis resin applied and could expose fibres. As suggested by gelcoat Manufacturers, use suitable products or, as an alternative, wet sand.

Component	Maintenance	Notes and precautions
Wood and tapestry	Periodical cleaning (as required)	Light and humidity are the worst enemies of these materials; do not expose them to direct light as often as possible, and ventilate the indoor spaces whenever allowed by the weather. It is extremely important the use of windows covers: any kind of wood, both natural and coated, will experience discolouring when exposed to sunlight. In spite of the painting cycles developed after so many years of experience, wood remains a “live” material and is therefore subject to movement and settlement. Scratches causes by bumps must be repaired immediately, to avoid the blackening of wood below. The technical staff of the RIVA Service Department will advise you about the maintenance level you have to apply at the end of each season of use. A correct maintenance will allow you to avoid deteriorations, reparable only at high costs. Dust with a soft and dry cloth. Clean with a soft, slightly moistened cloth. **CAUTION** The extremely precious finishing of the polish-varnished woods used for bathroom floors and cockpit tables is the result of an accurate work, it is water resistant but at the same time delicate and needing accurate maintenance. Such surfaces must therefore be dried after use (see bathrooms) or after the rain and a washing (see cockpit table), and a regular maintenance must be carried out. **CAUTION** Upholstering and wooden parts: the leather and wooden parts have to be treated as natural products, subjected only to colour alteration, particularly if the necessary precautions for a good maintenance are not taken. RIVA therefore reserves the right to evaluate troubles and its own responsibility each time.

Component	Maintenance	Notes and precautions
Wood and tapestry	Periodical cleaning (as required)	**MAINTENANCE** At least once a week carry out accurate washing and cleaning of all teak outside parts, and at least once a year perform a protective treatment with suitable products. **CAUTION** Current use: - Do not walk, nor jump on the cushions; - Prevent the cushions from becoming yellowish due to direct exposure to sun rays; - Prevent the absorption of water or of moisture by leaving the tapestry exposed to bed weather, particularly during periods of inactivity. Cleaning: - Remove ordinary dirt with a warm water solution and neutral soap: do not use detergents or solvents; - Dry with a soft rag, not leaving any residues. Preservation: - Store tapestries clean and dry into a fresh and ventilated room without moisture; - Do not place heavy objects on the tapestries when stored.
	Cleaning and preserving	Protect as much as possible from exposure to sun radiations. Any wood or surface treatment deteriorates over time. In spite of the painting cycles developed after so many years of experience, wood remains a “live” material and is therefore subject to movement and settlement. Scratches causes by bumps must be repaired immediately, to avoid the blackening of the wood below. The technical staff of the Service Department will advise you about the type of maintenance you have to carry out at the end of each season of use. A correct maintenance will allow you to prevent deteriorations that may be repaired only with very high costs. Consider that leather or wood are natural products, subject to chromatic variations, especially if the necessary precautions for a good maintenance are not taken.

Component	Maintenance	Notes and precautions
Teak	Periodical cleaning	It is necessary to use fresh water and brush by hand (no hard bristles) at least once a day. This will eliminate any stains, common grime due to walking and the normal saltiness of the environment. If performed on a regular basis, this process keeps your teak and caulking constantly maintained. In this case only time and wear will deteriorate this product in a natural manner. **CAUTION** Washing the deck with mechanical equipment or with a jet of pressurised water (hydrocleaners, for example) IS STRONGLY ADVISED AGAINST since this force alters the wood and the caulking sealants (detaches the micro-particles), causing even radical damage in some cases. Washing the deck with alkaline or acid-based detergents, or however with aggressive agents (soda, solvents, ammonia, etc..) IS STRONGLY ADVISED AGAINST. Their aggressive degreasing action corrodes the wood (eliminates its natural water-repellent properties and bleaches its natural colour), while the physical-chemical properties of the caulking sealant are altered, with its surface portion becoming softened and the impermeability, sealing and anchorage of the deck becoming damaged.

Component	Maintenance	Notes and precautions
Teak	Periodical cleaning	**CAUTION** Be careful when cleaning the external painted parts. The use of alkaline or acid-based soaps or detergents that are normally used for removing grime or salt from bulkheads, cabin. So when these washings are used, it is necessary to isolate the teak and sealant mentioned from any deposits, even temporary, of soaps and/or detergents. If it is impossible to cover the deck while cleaning the GRP, we recommend you dampen it with lots of fresh water so that any accumulation of detergent slides away and off the deck. The same procedure is recommended when refuel; if it is impossible to cover the deck, always dampen it with plenty of fresh water before each refuel. If the fuel penetrates the wood or caulking sealant, the deck will be irreparably damaged. Use a neutral detergent for cleaning teak. If some or all the external wooden parts have been painted or soaked with copal, linseed oil, teak oil, etc.., it is necessary to carefully follow the instructions provided by the manufacturer for daily cleaning operations. Non-black caulking could not have the same behaviour compared with the black one. Any aesthetic issues like mildew on the surface, color variation, dirt in the caulking have not be addressed as defects and could be prevented with a regular maintenance and service of the teak surface and caulking.
	Clean and protect	In spring, only when strictly necessary, sand. Wash with fresh water and neutral soap (like Marseille soap). Daily wash with fresh water. Do not use solvents or products that contain: acids, ammonia, alcohol, etc.. Sand only when strictly necessary.

Component	Maintenance	Notes and precautions
Painted teak	Cleaning and preserving	Wash with fresh water and neutral products. Dry with a soft cloth. Do not cause scratches. **CAUTION** The extremely valuable finishing of our shiny coated wood, which is the result of an accurate manufacture of different layers, is water resistant, but is also delicate and needs special care. These surfaces must therefore be dried after use and need a regular accurate maintenance.
Auxiliary deck equipment	Cleaning and preserving	Wash with fresh water and neutral products after each cruise. Protect against oxidation by cleaning the surfaces with a vaseline oil-moistened cloth.
Main deck	Cleaning and preserving	Daily wash using soft brushes with neutral products and fresh water. In case of surface damage or scratching, consult the Shipyard before undertaking repair. Do not use solvents or corrosive products. Polish metallic parts as described above.

Component	Maintenance	Notes and precautions
Light alloys and stainless steel	Periodical cleaning (as required)	It is a good rule to accurately wash the entire yacht after each navigation, in particular all metal parts that may be damaged by salty humidity. Have plenty of fresh water sprayed on handrail, windows, skylights, rub rail, anchors, cleats and ladder. Protect all metal parts with Vaseline oil periodically. **MAINTENANCE** At least once a year check the fastening of all metallic parts of the yacht. **CAUTION** The tilting aft window is not watertight, so do not point the bolt of water towards the window, when washing. **CAUTION** Never use brushes or abrasive rags on metallic fittings, not even on rusty spots, scratches on the surface result in a less shiny appearance and diminish the mechanical features.

Component	Maintenance	Notes and precautions
Outer furniture and cushions	Periodical cleaning (as required)	Remove the cushions from the seats on a regular interval and let their bottom side and the seat surface dry. When washing or when it is raining, remove the cushions and stow them in a covered place; however, when cushions are wet, remove them from their seats, to prevent that water or humidity remain entrapped between cushions and underneath surface. This could affect the gel-coat and also create osmosis bubbles and deteriorate the cushion cover. The cushions must be washed with running water; do not use jet-cleaners, brushes or abrasive sponges. **MAINTENANCE** At least every 6 months check seams and fasteners. At least every month carry out the washing of the cushions.
	General care and cleaning guide	• **For light soiling,** a solution of 10% PH neutral soap in warm water applied with a soft damp cloth. Rinse with clean water and dry. • **For heavy soiling,** dampen a soft white cloth with a one to one (1:1) solution of an all-purpose and dye free household cleaner water. Rub gently and rinse with a water dampened cloth. **CAUTION** Do not use alcohol based cleaning agents! **CAUTION** Do not use aggressive detergents and/or solvents, which will cause immediate damage and contribute to deterioration of the material.

Component	Maintenance	Notes and precautions
Outer furniture and cushions	General care and cleaning guide	**CAUTION** Do not keep exposed to UV (solar light) for a long time without protections: when do not in use, take care to remove the cushions and stow them in a cover place or, if weather is good (not in raining days), you should cover the cushions to prevent deterioration. **CAUTION** When not in use, remember to remove the sun-bathing cushions from their seats and to let them dry, so that no water or humidity remains between the cushions and the surface underneath. When washing the yacht or in case of rain, remove the cushions and stow them dry in a covered place. When possible, protect from direct exposure to the sun and/or to night humidity and/or weather. Make sure the external coating is not deteriorated and that the cushions do not absorb water.
	Cleaning and preserving	Wash with fresh water at each re-entering from navigation, do not use hydro-cleaners, brushes or abrasive sponges. Let dry well in all its parts, especially the resting ones.
Fenders	Periodic cleaning and checking	Keep all the fenders and the relative clean socks, washing them periodically with fresh water in order to avoid that the salt deposited on them scratch the paint of the hull.

Component	Maintenance	Notes and precautions
Windscreen wiper and washer	Periodical cleaning (as required)	Wash them carefully with fresh water and coat with Vaseline oil; grease the spring with silicone grease. Check the rubber blades conditions periodically, and replace the blades if worn; this prevents bad visibility problems. After each wash, dispense a little water from the sprayers to avoid the formation of limescale or salt build-up. Check the wear and condition of the wiper blades and replace if necessary. Poor wiper blade condition may result in poor visibility in the event of need. **CAUTION** In the event of ice, lift the wiper blades off the windscreen to prevent them from tearing. Always wet the windscreen with the windscreen washers or water before operating the wipers. During wiper blade or windscreen wiper maintenance, ensure that the wipers cannot be activated inadvertently.
Windscreen and deckhouse glass	Verification of sealings	**CAUTION** At least once every six months, check the condition of the window seals. If you feel that the rubbers have deteriorated due to wear, please contact the Service Department.
Windshield, windows and portholes	Cleaning	Wash with fresh water, if necessary use neutral detergents. **CAUTION** Do not use rags or anything other than water: salt sediments or soil could damage the surface.

Component	Maintenance	Notes and precautions
Windscreen	Periodical cleaning	**NOTE** Rags and doeskins used for cleaning the glasses must be replaces at least every 3 months. The inner side of glasses and windscreen can be carried out with a detergent for glass and a soft cloth. **CAUTION** If after normal cleaning some traces of dirt or light scratches remain, do not try and remove them with mechanical means or by means of aggressive detergents, solvents or abrasive products. Contact the RIVA Service Department. **NOTE** Uniformly wet the whole surface of the glass with plenty of fresh water. - Use a neutral detergent or a delicate commercial product (not alkaline) diluted in fresh water. - Spread the solution with a soft and clean cloth. Frequently rinse the cloth in order to prevent deposits of dust or dirt particles which could scratch the glass or its glazed coating. - Rinse the soapy surface with plenty of fresh (or distilled) water. - We recommend drying the glass only with doeskin. **CAUTION** At least once every six months, check the condition of the window seals. If you feel that the rubbers have deteriorated due to wear, please contact the Service Department.

Component	Maintenance	Notes and precautions
Instrumentation and navigation lights	Periodical cleaning (as required)	Use clean wet rags for cleaning. **MAINTENANCE** At least once a week check the operation of the navigation lights. At least once a week, carry out an accurate cleaning of glasses and headlights. At least once every six months, check for the presence of corrosion in the cable connections of the navigation lights. At least once every six months, tighten the cable connections of the navigation lights. **MAINTENANCE** At least once a week check the operation of the gauge cluster in the fly and of all instruments on board. At least once a week carry out cleaning. At least once every six months, protect the piston for fly gauge cluster opening with proper products. **CAUTION** Do not use chemical or abrasive products. After navigation, cover instrumentation and equipment.
Light bodies	Periodical cleaning (as required)	Do not use alcoholic products to clean the light bodies.
Connectors and metallic components	Periodical cleaning (as required)	Grease connectors and metal parts of the devices installed and exposed to moist and salty environment to prevent oxidation; pay particular care and attention to the above-mentioned components of the steering system, gangway, hatches and control units, etc..

Component	Maintenance	Notes and precautions
Plexiglass	Periodical cleaning (as required)	To clean the plexiglass use only products that do not contain aggressive substances such as alcohol, ammonia or the like. Preference for liquid detergent antistatic. Use cloth of soft material (such as cotton or felt). **CAUTION** Never use denaturised alcohol or acetone to clean Plexiglas parts; they could crack inside. To clean, to scour and to polish the plexiglass, spray a small amount of liquid detergent antistatic on the cloth and wipe the surface. The antistatic effect of the cleaner is very useful to prevent dust from being attracted by static electricity generated during the rubbing and that makes very difficult to clean the entire surface smoothly. If the cause of opacity is dirt, simply use an anti-static cleaning fluid and a soft cloth to remove smears: the plexiglass will clean and bright. If opacity is due to the contact with aggressive substances, it means that the surface has been compromised in the structure and the plexiglass can not return as before. If the marks are light and have been caused by wear and not from chemicals, anti-scratch dough can fix it. Even for light scratches anti-scratch dough is perfect. Do not ruin the surface and restores clarity to plexiglass. Anti-scratches dough removes surface scratches from normal wear. Those deep caused by sharp objects will not be eliminated but only mitigated.

Component	Maintenance	Notes and precautions
Ceilings Panels	Regularly check the planarity of the panels and / or any discontinuities or steps between the ceilings panels.	Whenever the ceilings are dismounted, it is compulsory to check the status of the Fit Lock or/ and 3M Dual Lock fastening systems breakage of the teeth as i.e. and/ or the entire system. **WARNING** Do not install ceilings panels with fastening systems damaged, Fit Lock or 3M Dual Lock, due of a possible reduction of their retention power. Damaged parts must be absolutely replaced with new ones. In order to be sure that the ceilings have been reassembled correctly, check the planarity with the other ceilings panels and the absence of discontinuities and steps between one ceiling panel and the others.

Component	Maintenance	Notes and precautions
Shower	Checking and replacing gaskets	**CAUTION** Carry out periodic maintenance and/or replacement of the shower box seals, in order to prevent water leakage. **CAUTION** The shower enclosures are made in such a way as to avoid water leaks outside the enclosure, under normal conditions of use of the shower. However, they do not have a watertight seal. 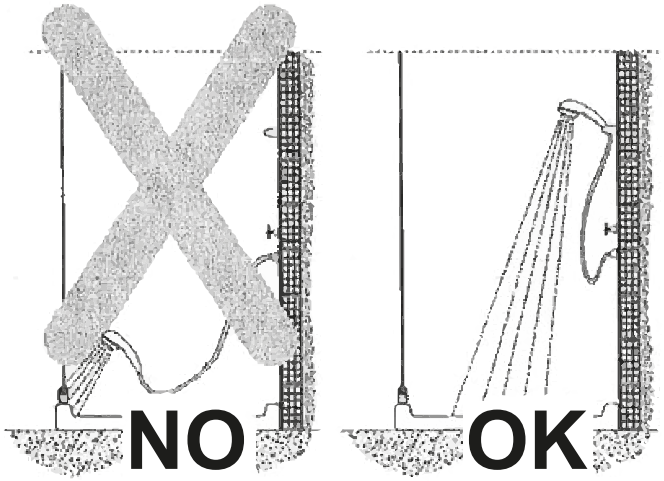 The functionality of the shower cubicles is subject to the use for which it was designed; the water tightness is therefore conditioned by the correct use.

6.21 SPEED MULTISENSOR MAINTENANCE (LOG SENSOR)

Component	Maintenance	Notes and precautions
LOG - speed multi-sensor with valve	Periodical check Ordinary Maintenance	As indicated in the Manufacturer's Manual. **MAINTENANCE** At least once every six months check the correct operation. At least once every six months check the connection of the cables. At least once every six months check the propeller and grease the outer Log.

NOTES:

MANUAL ACCEPTANCE FORM

Dear Customer,

We have the pleasure to deliver to you the Owner's Manual of your 38 RIVAMARE.

Hull no. 94; code : IT-FERRRM94K425

This manual has been printed in two identical copies: one delivered to you and one kept at RIVA.

As a confirmation that you have read the whole manual, we kindly ask you to sign and send this page to the following address:

Office After Sales & Service RIVA
Ferretti S.p.A.
Via Ansaldo, 7
47122 - Forlì (FC) - Italy
Tel: + 39 0543 787511
Fax: + 39 0543 473069
customer.service@riva-yacht.com

MANUAL ACCEPTANCE FORM

Dear Customer,

We have the pleasure to deliver to you the Owner's Manual of your 38 RIVAMARE.

Hull no. 94; code : IT-FERRRM94K425

This manual has been printed in two identical copies: one delivered to you and one kept at RIVA.

As a confirmation that you have read the whole manual, we kindly ask you to sign and send this page to the following address:

Office After Sales & Service RIVA
Ferretti S.p.A.
Via Ansaldo, 7
47122 - Forlì (FC) - Italy
Tel: + 39 0543 787511
Fax: + 39 0543 473069
customer.service@riva-yacht.com



Date:

(On behalf of) The Owner: