Operating Instructions

ZF 3000 FAMILY
Marine Propulsion Systems

Copyright © ZF Friedrichshafen AG

This document is protected by copyright.
Complete or partial reproduction or distribution of this document is not permitted without the approval of ZF Friedrichshafen AG.
Infringements lead to civil and criminal prosecution.
This document is a translation of the German original.

1 Preface 10
1.1 Validity and field of application 10
1.2 Warranty 10
1.3 Document overview 11

2 Safety 12
2.1 Signal words and symbols 12
2.2 General safety instructions 13
2.3 Product-specific safety instructions 15
2.3.1 High-pressure cleaner 15

3 Description 16
3.1 General design principle 16
3.1.1 Reverse transmissions and reduction gears 16
3.1.2 Transmissions with power take-in 18
3.1.3 Transmission with hydraulic shaft brake 19
3.1.4 Reduction gear without multidisk clutch 20
3.2 Transmission views 21
3.2.1 ZF 3000, ZF 3050, ZF 3055, ZF 3060, ZF 3070, ZF 3000 NR, ZF 3050 NR, ZF 3055 NR, ZF 3060 NR, ZF 3070 NR 21
3.2.2 ZF 3000 NC (Counter-rotation), ZF 3050 NC (Counter-rotation), ZF 3055 NC (Counter-rotation), ZF 3060 NC (Counter-rotation) 23
3.2.3 ZF 3000 A, ZF 3050 A, ZF 3055 A, ZF 3060 A, ZF 3070 A, ZF 3150 A, ZF 3160 A, ZF 3170 A, ZF 3000 NRA, ZF 3050 NRA, ZF 3055 NRA, ZF 3060 NRA, ZF 3070 NRA, ZF 3150 NRA, ZF 3160 NRA, ZF 3170 NRA 25
3.2.4 ZF 3000 V, ZF 3050 V, ZF 3055 V, ZF 3060 V, ZF 3070 V, ZF 3000 NRV, ZF 3050 NRV, ZF 3055 NRV, ZF 3060 NRV, ZF 3070 NRV 27
3.2.5 ZF 3050 D, ZF 3055 D, ZF 3060 D 29
3.2.6 ZF 3310, ZF 3350, ZF 3355, ZF 3360, ZF 3370, ZF 3310 NR, ZF 3350 NR, ZF 3355 NR, ZF 3360 NR, ZF 3370 NR 31
3.2.7 ZF 3310 NC (Enginewise rotation), ZF 3350 NC (Enginewise rotation), ZF 3355 NC (Enginewise rotation), ZF 3360 NC (Enginewise rotation) 33
3.2.8 ZF 3311, ZF 3351, ZF 3356, ZF 3361, ZF 3311 NR, ZF 3351 NR, ZF 3356 NR, ZF 3361 NR 35
3.2.9 ZF 3311 NC (Counter-rotation), ZF 3351 NC (Counter-rotation), ZF 3356 NC (Counter-rotation), ZF 3361 NC (Counter-rotation) 37
3.2.10 ZF 3311, ZF 3351, ZF 3356, ZF 3361, ZF 3311 NR, ZF 3351 NR, ZF 3356 NR, ZF 3361 NR with power take-in 39
3.2.11 ZF 3311, ZF 3351, ZF 3356, ZF 3361, ZF 3311 NR, ZF 3351 NR, ZF 3356 NR, ZF 3361 NR with shaft brake 41
3.2.12 ZF W3310, ZF W3350, ZF W3355, ZF W3310 NR, ZF W3350 NR, ZF W3355 NR 43
3.2.13 ZF W3310 NC (Counter-rotation), ZF 3350 NC (Counter-rotation), ZF 3355 NC (Counter-rotation) 45
3.2.14 ZF W3310, ZF W3350, ZF W3355,ZF W3310 NR, ZF W3350 NR, ZF W3355 NR with power take-in 47
3.2.15 ZF W3310, ZF W3350, ZF W3355, ZF W3310 NR, ZF W3350 NR, ZF W3355 NR with shaft brake 49

3.2.16 ZF 3711, ZF 3751, ZF 3756, ZF 3761, ZF W3710, ZF W3750, ZF W3755, ZF 3711 NR, ZF 3751 NR, ZF 3756 NR, ZF 3761 NR, ZF W3710 NR, ZF W3750 NR, ZF W3755 NR ... 51
3.3 Transmission diagram and power flow diagram ... 53
3.3.1 Parallel version ... 54
3.3.2 A version ... 60
3.3.3 V version ... 63
3.3.4 D version ... 66
3.3.5 Power take-in ... 67
3.3.6 Shaft brake ... 77
3.4 Power take-off ... 80
3.4.1 Input shaft front PTO ... 81
3.4.2 Top PTO ... 81
3.4.3 Pump PTO ... 81
3.5 Power take-in ... 81
3.6 Hydraulic shaft brake ... 82
3.7 Oil supply ... 83
3.7.1 Main drive ... 83
3.7.2 Power take-in ... 83
3.7.3 Shaft brake ... 84
3.7.4 NC transmission with attached pump ... 84
3.7.5 NC transmission with external pump ... 84
3.8 Cooling system ... 85
3.8.1 Main drive ... 85
3.8.2 Power take-in ... 85
3.8.3 NC transmission ... 85
3.9 Clutch ... 86
3.9.1 Main drive ... 86
3.9.2 Power take-in ... 86
3.9.3 Shaft brake ... 86
3.10 Control ... 86
3.10.1 Main drive ... 86
3.10.2 Power take-in ... 87
3.10.3 Shaft brake ... 87
3.11 Trolling ... 88
3.11.1 Function description ... 88
3.11.2 Electric trolling ... 89
3.11.3 ZF Autotroll® ... 90
3.12 Transmission monitoring ... 91
3.12.1 ZF 3000 family, ZF 3000 A family, ZF 3000 V family, ZF 3000 D family ... 91
3.12.2 ZF 3000 NC (counter-rotation) family ... 95
3.12.3 ZF 3300 family with aluminum housing ... 97
3.12.4 ZF 3300 NC (enginewise rotation) family with aluminum housing ... 100
3.12.5 ZF 3300 family and ZF W3300 family with gray cast iron housing ... 102
3.12.6 ZF 3300 NC (counter-rotation) family and ZF W3300 NC (counter-rotation) family with gray cast iron housing ... 105

3.12.7 ZF 3300 family and ZF W3300 family with power take-in 107
3.12.8 ZF 3300 family and ZF W3300 family with shaft brake 110
3.12.9 ZF 3700 family and ZF W3700 family 113
3.12.10 Minimum transmission monitoring 116
3.12.11 Additional transmission monitoring 118
3.13 Transmission cooling 121
3.13.1 Cooling water circuit 122
3.13.2 Transmission oil cooler 123
3.13.3 Tubing 126
3.14 Installation 129
3.14.1 Transmission installation 130
3.14.2 Installation of pump unit's electric motor 131
3.14.3 Installation of pump unit's oil pump 131
3.14.4 Transmission oil cooler installation 132
3.14.5 Monitoring unit installation 132
3.14.6 Installation of electrically operated brake 132
3.14.7 Transmission mounting in the ship foundation 138
3.14.8 Connection to the engine 139
3.14.9 Connection to the propshaft 144
3.14.10 Transmission alignment 146

4 Technical Data 151
4.1 Technical Data for transmission types ZF 3000, ZF 3050, ZF 3055, ZF 3060, ZF 3070, ZF 3000 NR, ZF 3050 NR, ZF 3055 NR, ZF 3060 NR and ZF 3070 NR 151
4.2 Technical Data for transmission types ZF 3000 NC, ZF 3050 NC, ZF 3055 NC, ZF 3060 NC with counter-rotation direction 153
4.3 Technical Data for transmission types ZF 3000 A, ZF 3055 A, ZF 3055 A, ZF 3060 A, ZF 3070 A, ZF 3150 A, ZF 3160 A, ZF 3170 A, ZF 3000 NRA, ZF 3050 NRA, ZF 3055 NRA, ZF 3060 NRA, ZF 3070 NRA, ZF 3150 NRA, ZF 3160 NRA and ZF 3170 NRA 154
4.4 Technical Data for transmission types ZF 3000 V, ZF 3055 V, ZF 3055 V, ZF 3060 V, ZF 3070 V, ZF 3000 NRV, ZF 3050 NRV, ZF 3055 NRV, ZF 3060 NRV and ZF 3070 NRV 156
4.5 Technical Data for transmission types ZF 3050 D, ZF 3055 D and ZF 3060 D 158
4.6 Technical Data for transmission types ZF 3310, ZF 3350, ZF 3355, ZF 3360, ZF 3370, ZF 3310 NR, ZF 3350 NR, ZF 3355 NR, ZF 3360 NR and ZF 3370 NR 159
4.7 Technical Data for transmission types ZF 3310 NC, ZF 3350 NC, ZF 3355 NC, ZF 3360 NC with enginewise rotation direction 161
4.8 Technical Data for transmission types ZF 3311, ZF 3351, ZF 3356, ZF 3361, ZF W3310, ZF W3350, ZF W3355, ZF 3311 NR, ZF 3351 NR, ZF 3356 NR, ZF 3361 NR, ZF W3310 NR, ZF W3350 NR and ZF W3355 NR 162
4.9 Technical Data for transmission types ZF 3311 NC, ZF 3351 NC, ZF 3356 NC, ZF 3361 NC, ZF W3310 NC, ZF W3350 NC, ZF W3355 NC with counter-rotation direction 164
4.10 Technical Data for transmission types ZF 3311, ZF 3351, ZF 3356, ZF 3361, ZF W3310, ZF W3350, ZF W3355, ZF 3311 NR, ZF 3351 NR, ZF 3356 NR, ZF 3361 NR, ZF W3310 NR, ZF W3350 NR, ZF W3355 NR with power take-in 165

4.11 Technical Data for transmission types ZF 3311, ZF 3351, ZF 3356, ZF 3361, ZF W3310, ZF W3350, ZF W3355, ZF 3311 NR, ZF 3351 NR, ZF 3356 NR, ZF 3361 NR, ZF W3310 NR, ZF W3350 NR, ZF W3355 NR with shaft brake 167
4.12 Technical Data for transmission types ZF 3711, ZF 3751, ZF 3756, ZF 3761, ZF W3710, ZF W3750, ZF W3755, ZF 3711 NR, ZF 3751 NR, ZF 3756 NR, ZF 3761 NR, ZF W3710 NR, ZF W3750 NR and ZF W3755 NR 169
4.13 Monitoring values for the ZF 3000 family 171
4.14 Monitoring values for the ZF 3000 NC (counter-rotation) family 173
4.15 Monitoring values for the ZF 3300 family and ZF W3300 family 174
4.16 Monitoring values for the ZF 3300 NC (enginewise rotation) family with aluminum housing 176
4.17 Monitoring values for the ZF 3300 NC (counter-rotation) family with gray cast iron housing 177
4.18 Monitoring values for the ZF W3300 NC (counter-rotation) family 178
4.19 Monitoring values for the ZF 3300 family and ZF W3300 family with power take-in 179
4.20 Monitoring values for the ZF 3300 family and ZF W3300 family with shaft brake 181
4.21 Monitoring values for the ZF 3700 family and ZF W3700 family 183
4.22 Transmission designation 184
4.23 Input shaft direction of rotation 185
4.24 Direction of rotation of propeller when traveling forward 186
4.24.1 Standard engine arrangement 187
4.24.2 Engine arrangement of V version and U version 188
4.25 Alignment accuracy of the propshaft 189

5 Initial Operation 190
5.1 Initial operation 190
5.1.1 Oil filling and oil level check 190
5.1.2 Connection of the monitoring devices 190
5.1.3 Work prior to initial operation 191
5.2 Commissioning after an extended downtime 194

6 Operation 195
6.1 Operating elements 195
6.1.1 Electric actuation unit ZF 3000, ZF 3300, ZF 3700 family without NR 197
6.1.2 Electric actuation unit ZF 3000 NR, ZF 3300 NR, ZF 3700 NR (counter-rotation) family 205
6.1.3 Electric actuation unit ZF 3000 NR, ZF 3300 NR, ZF 3700 NR (enginewise rotation) family 210
6.1.4 Mechanical actuation unit 215
6.2 Operating elements of the power take-in 223
6.2.1 Electric actuation unit of the main drive of ZF 3300 family without NR 226
6.2.2 Electric actuation unit of the main drive of ZF 3300 NR (counter-rotation) family 234
6.2.3 Electric actuation unit of the main drive of ZF 3300 NR (enginewise rotation) family 240
6.2.4 Electric actuation unit of the power take-in 246
6.3 Operating elements of the shaft brake 249
6.3.1 Electric actuation unit of the main drive of ZF 3300 family without NR 251
6.3.2 Electric actuation unit of the main drive of ZF 3300 NR (counter-rotation) family 259

6.3.3 Electric actuation unit of the main drive of ZF 3300 NR (enginewise rotation) family ... 264
6.3.4 Electric actuation unit of the shaft brake ... 269
6.4 Shifting process ... 269
6.4.1 Shifting process when driving with the main drive ... 269
6.4.2 Shifting process when driving with the power take-in ... 271
6.4.3 Shift process when shaft brake is activated ... 281
6.4.4 Shift process when shaft brake is deactivated ... 282
6.5 Trailing operation ... 283
6.5.1 Occasional trailing operation ... 283
6.5.2 Regular trailing operation ... 283
6.6 Operation with the emergency control (Come home screws) ... 284
6.6.1 Activating the emergency control ... 285
6.6.2 Deactivating the emergency control ... 286
6.7 Operating the filter during operation ... 288
6.7.1 Switching the filter to the protective filter ... 289
6.7.2 Replacing the filter cartridge ... 289

7 Transport and Storage ... 293
7.1 Transport ... 293
7.2 Storage ... 293
7.2.1 Preservation with ex works delivery ... 293
7.2.2 Preservation of marine transmissions during storage at the customer ... 294

8 Decommissioning ... 296
8.1 Work prior to decommissioning or prior to an extended downtime ... 296
8.1.1 Closed cooling water circuit ... 296
8.1.2 Open cooling water circuit ... 296
8.2 Corrosion protection and preservation ... 296

9 Maintenance ... 299
9.1 Operating range ... 299
9.1.1 Application group P ... 299
9.1.2 Application group L ... 299
9.1.3 Application group M ... 299
9.1.4 Application group C ... 299
9.2 Maintenance schedule ... 300
9.2.1 Maintenance schedule concept ... 300
9.3 Maintenance work schedule ... 302
9.4 Spare parts orders and ZF service branches ... 303
9.4.1 Spare parts orders ... 303
9.4.2 ZF service branches ... 303
9.5 Notes on maintenance ... 304
9.5.1 General notes ... 304
9.5.2 Lubricating grease ... 304
9.5.3 Recommended auxiliary materials and operating supplies ... 305
9.6 Tool kit ... 306

9.6.1 Tool kit W1 for maintenance ... 306
9.7 Maintenance work 101: Check oil level ... 307
9.7.1 Checking the oil level ... 308
9.8 Maintenance work 103: Conduct visual inspection ... 309
9.8.1 Conducting visual inspection ... 310
9.9 Maintenance work 121: Clean transmission exterior ... 311
9.9.1 Cleaning the transmission exterior ... 312
9.10 Maintenance work 122: Retighten all screw connections accessible from the outside . 313
9.10.1 Retightening all screw connections accessible from the outside ... 314
9.11 Maintenance work 123: Check mechanical actuation shift settings ... 315
9.11.1 Shift travel and shift angles of shift lever ... 316
9.11.2 Checking the mechanical actuation shift settings ... 317
9.11.3 Aligning the shift lever ... 319
9.12 Maintenance work 124: Grease moving external parts of the mechanical actuation ... 320
9.12.1 Greasing the moving external parts of the mechanical actuation ... 321
9.13 Maintenance work 141: Change oil ... 322
9.13.1 Changing oil ... 323
9.14 Maintenance work 142: Replace filter cartridge and clean power take-in filter ... 326
9.14.1 Replacing the filter cartridge ... 327
9.14.2 Replacing the change-over filter's filter cartridge ... 327
9.14.3 Cleaning the change-over filter protective filter ... 330
9.14.4 Cleaning the power take-in filter ... 334
9.15 Maintenance work 161: Conduct visual inspection at torsionally flexible coupling ... 337
9.15.1 Conducting visual inspection at torsionally flexible coupling ... 338
9.16 Maintenance work 162: Conduct visual inspection at flexible transmission mounting and flexible engine mounting ... 339
9.16.1 Conducting visual inspection at flexible transmission mounting and flexible engine mounting ... 340
9.17 Maintenance work 163: Conduct visual inspection at clutch disks ... 341
9.17.1 Conducting visual inspection at clutch disks ... 342
9.18 Maintenance work 164: Conduct visual inspection at running gearing ... 344
9.18.1 Conducting visual inspection at running gearing ... 345
9.19 Maintenance work 165: Check oil pumps ... 347
9.19.1 Maintenance ... 348
9.19.2 Actions required during oil pump removal ... 348
9.19.3 Commissioning the oil pumps ... 348
9.19.4 Determining the direction of rotation ... 349
9.19.5 Design of the oil pump ... 350
9.19.6 Removing and cleaning the engine-dependent oil pump ... 351
9.19.7 Removing and cleaning the engine-dependent oil pump ... 354
9.19.8 Trailing pump ... 357
9.20 Maintenance work 166: Check control unit and valve block of power take-in and shaft brake ... 362
9.20.1 Design of the control unit ... 363
9.20.2 Checking the control unit ... 365
9.20.3 Design of the power take-in valve block ... 366

9.20.4 Design of the shaft brake's valve block ... 368
9.20.5 Checking the valve block ... 370
9.21 Maintenance work 167: Check electrical and mechanical actuation unit ... 371
9.21.1 Removing, checking and installing the mechanical actuation unit ... 372
9.21.2 Removing, checking and installing the electric actuation unit ... 373
9.21.3 Removing, checking and installing the electric actuation unit of the power take-in ... 375
9.21.4 Removing, checking and installing the electric actuation unit of the shaft brake ... 377
9.22 Maintenance work 168: Recalibrate display device ... 379
9.22.1 Recalibrating the display device ... 380
9.23 Maintenance work 169: Visually inspect and clean transmission oil cooler ... 381
9.23.1 Design of the transmission oil cooler ... 382
9.23.2 Disassembling the transmission oil cooler without removal of the tube bundle ... 383
9.23.3 Water end of the transmission oil cooler ... 386
9.23.4 Disassembling the transmission oil cooler with removal of the tube bundle ... 387
9.23.5 Reassembling the transmission oil cooler without removal of the tube bundle ... 392
9.23.6 Reassembling the transmission oil cooler after removal of the tube bundle ... 396
9.24 Maintenance work 172: Check injector tube valve ... 403
9.24.1 Checking the injector tube valve ... 404
9.25 Maintenance work 173: Check shaft sealing ring of the input shaft ... 406
9.25.1 Checking the shaft sealing ring of the input shaft ... 407
9.26 Maintenance work 174: Check shaft sealing ring of the output shaft ... 408
9.26.1 Checking the shaft sealing ring of the output shaft ... 409
9.27 Maintenance work 181: Visually inspect and clean power take-in brake ... 410
9.27.1 Electrically operated brake ... 411
9.28 Maintenance work 182: Visually inspect and clean additional equipment ... 421
9.28.1 Visually inspecting and cleaning the power take-in ... 422

10 Troubleshooting ... 425
10.1 Troubleshooting notes ... 425
10.2 Failure table for the complete transmission ... 426
10.3 Failure table for the transmission oil cooler ... 428
10.4 Troubleshooting on the transmission oil cooler ... 429
10.4.1 Leaking tubes ... 429
10.4.2 Leaking O-rings ... 430
10.5 Diagnosis with ZF Autotroll® ... 430

11 Annex ... 431
11.1 List of abbreviations ... 431
11.2 Subject index ... 432
11.3 Overview of revisions ... 435

1 Preface

1.1 Validity and field of application

This documentation applies to the following ZF products:

- ZF 3000, ZF 3050, ZF 3055, ZF 3060, ZF 3070
- ZF 3000 NR, ZF 3050 NR, ZF 3055 NR, ZF 3060 NR, ZF 3070 NR
- ZF 3000 NC, ZF 3050 NC, ZF 3055 NC, ZF 3060 NC with counter-rotation direction
- ZF 3000 A, ZF 3050 A, ZF 3055 A, ZF 3060 A, ZF 3070 A, ZF 3150 A, ZF 3160 A, ZF 3170 A
- ZF 3000 NRA, ZF 3050 NRA, ZF 3055 NRA, ZF 3060 NRA, ZF 3070 NRA, ZF 3150 NRA, ZF 3160 NRA, ZF 3170 NRA
- ZF 3000 V, ZF 3050 V, ZF 3055 V, ZF 3060 V, ZF 3070 V
- ZF 3000 NRV, ZF 3050 NRV, ZF 3055 NRV, ZF 3060 NRV, ZF 3070 NRV
- ZF 3050 D, ZF 3055 D, ZF 3060 D
- ZF 3310, ZF 3350, ZF 3355, ZF 3360, ZF 3370
- ZF 3310 NR, ZF 3350 NR, ZF 3355 NR, ZF 3360 NR, ZF 3370 NR
- ZF 3310 NC, ZF 3350 NC, ZF 3355 NC, ZF 3360 NC with enginewise rotation direction
- ZF 3311, ZF 3351, ZF 3356, ZF 3361, ZF W3310, ZF W3350, ZF W3355
- ZF 3311 NR, ZF 3351 NR, ZF 3356 NR, ZF 3361 NR, ZF W3310 NR, ZF W3350 NR, ZF W3355 NR
- ZF 3311 NC, ZF 3351 NC, ZF 3356 NC, ZF 3361 NC, ZF W3310 NC, ZF W3350 NC with counter-rotation direction
- ZF 3711, ZF 3751, ZF 3756, ZF 3761, ZF W3710, ZF W3750, ZF W3755
- ZF 3711 NR, ZF 3751 NR, ZF 3756 NR, ZF 3761 NR, ZF W3710 NR, ZF W3750 NR, ZF W3755 NR

This documentation applies to the following additional equipment:

- Input shaft PTO
- Top PTO
- Pump PTO
- Trolling
- Trailing pump
- Power take-in
- Electric brake for power take-in
- Shaft brake

1.2 Warranty

ZF grants warranty for the ZF product according to the warranty conditions of ZF Friedrichshafen AG, Marine Propulsion Systems Business Unit.

Damage, secondary damage, defects and resulting costs are excluded from contractual liability or warranty in the event of non-compliance with one of the following points:

- Work on the ZF product may only be performed by trained, instructed and authorized staff.
- Use lubricants contained in the current ZF List of Lubricants TE-ML 04.
- Install, monitor, operate and maintain the ZF product according to the Operating Instructions.
- Comply with the limit values as specified on the type plate for the maximum ratio between the engine performance and the engine speed as well as for the engine speeds according the transmission classification.

- Only use genuine ZF spare parts.
- Only use genuine ZF accessories.
- Modifications and conversions to the ZF product and to the components of the ZF product must be approved by ZF.
- Check propulsion system for torsional vibrations and resonance compatibility at the shipyard.
- Observe ZF conservation provisions when storing and installing the transmission.

In case of damage, immediate action is mandatory in order to restore full functionality of the ZF product and to minimize the extent of damage.

In cases of proven and unexcused delay of repairs, ZF reserves the right to partially deny or even completely refuse any warranty requests.

1.3 Document overview

Observe the information in these documents. The information in these documents is a prerequisite for fault-free operation of the product and for the warranty granted by ZF Friedrichshafen AG. The documents can be requested at ZF Friedrichshafen AG.

Document no.	Designation	Technical information
TE-ML 04	ZF List of Lubricants[1)]	Marine transmission

Tab. 1

[1)] The valid ZF List of Lubricants TE-ML 04 can be downloaded as a PDF document free of charge at www.zf.com .

2 Safety

2.1 Signal words and symbols

This document contains particularly highlighted safety instructions which are marked with one of the following signal words depending on the severity of the danger.

⚠ DANGER

DANGER
The signal word DANGER indicates a dangerous situation that, if not prevented, will lead to a severe injury or death.
⇨ Information as to how the danger can be prevented.

⚠ WARNING

WARNING
The signal word WARNING indicates a dangerous situation that, if not prevented, can lead to a severe injury or death.
⇨ Information as to how the danger can be prevented.

⚠ CAUTION

CAUTION
The signal word CAUTION indicates a dangerous situation that, if not prevented, can lead to a slight or moderate injury.
⇨ Information as to how the danger can be prevented.

NOTICE

The signal word NOTICE indicates a situation that, if not prevented, can lead to property damage.
⇨ Information as to how the property damage can be prevented.

The following symbols are additionally used:

⚠ This symbol refers to additional, safety-relevant information.

ⓘ This symbol indicates information concerning special workflows, methods, application of aids, etc.

2.2 General safety instructions

Read all safety instructions and information. Failure to comply with safety instructions and information may lead to property damage, serious injuries or death.

Intended use

The ZF product is exclusively intended for the application as defined in the contract and as agreed on the time of delivery. Any other or extended form of use does not comply with this definition of intended use. The intended use includes compliance with this documentation and other applicable documents, in order to avoid malfunctions and damage in operation.

The ZF product is designed and produced in line with state-of-the-art technology. The ZF product in its delivery status is safe to operate. However, the ZF product may pose dangers if improperly used by unauthorized, untrained and uninstructed staff or if not used according to its intended use.

Figures might deviate from the ZF product and are not drawn to scale. No conclusions can be drawn with regard to size and weight.

Installation, commissioning, maintenance and repair

Perform assembly, commissioning, maintenance and repair work exclusively according to this documentation and other applicable documents.

Observe the following points:

- Employ authorized, trained and instructed staff.
- Observe technical provisions.
- Only use genuine ZF spare parts.
- Only use genuine ZF accessories.
- Only use genuine ZF special tools.
- Unauthorized changes and modifications lead to the expiry of the operator's license, warranty or guarantee.

In case of damage, contact ZF and have the following information on the product ready:

- Type
- Parts list [BoM] number
- Serial number
- Operating hours
- Description of damage

Observe safety instructions, valid safety regulations and legal conditions to prevent malfunctions and damage.

The country-specific safety regulations, accident prevention regulations and environmental protection provisions apply additionally.

Wear safety-relevant workwear for all work. Depending on the work, also wear personal protective equipment.

After completing the work, check correct function and functional security.

Handling of ZF product

Unauthorized changes and modifications might impair functional security. Changes, modifications and applications are only permissible upon written approval by ZF Friedrichshafen AG.

Observe the following when working on the ZF product:

- Secure workspace.
- Only carry out work at the unit when in a voltage-free state.
- Protect unit against being started accidentally. Attach instruction plate where it is clearly visible.
- Perform work when engine is switched off.
- Protect engine against being started accidentally. Attach instruction plate where it is clearly visible.
- Do not stand beneath a suspended load.
- Do not work on a suspended load.
- Only use permitted means of transport and lifting devices with sufficient load-bearing capacity.
- Close open tubings and hoses and avoid damage.
- Observe tightening torques.
- Protect cables against mechanical damage.

Noise

Noise might cause irreversible damage to hearing.

The perception of acoustic signals, warning calls or sounds warning of impending danger is impaired by noise.

Observe the following when working on the ZF product:

- Avoid noise.
- Wear ear protection.

Operating supplies and aids

Operating supplies and aids might cause permanent damage to health and environmental damage.

Observe the following when selecting operating supplies and aids:

- Health risks
- Environmental compatibility
- Material safety data sheets

Observe the following when handling operating supplies and aids:

- Store operating supplies and aids in suitable and correctly labeled containers.
- Seek medical help in case of injuries due to hot, cold or caustic operating supplies or aids.

Observe the following to protect the environment:

- Collect leaking operating supplies and aids in sufficiently large containers.
- Observe disposal regulations.
- Observe material safety data sheets.

2.3 Product-specific safety instructions

2.3.1 High-pressure cleaner

Do not clean listed ZF products *(refer to Chapter Preface, page 10)* with a high-pressure cleaner.

3 Description

3.1 General design principle

The ZF marine transmissions are designed and produced according to the regulations of the various classification societies. The drive ratings approved by the classification societies depend on the following factors:

- Input speed
- Ship class
- Applicable construction regulations

On request, a full test or design acceptance is carried out by the classification society determined by the customer.

The normal direction of drive rotation, when viewing the transmission input flange, is to the right. A directional arrow can be found on the transmission input side on those transmissions whose direction of drive rotation is to the left .

The housing is torsion-resistant and consists of light metal or gray casting. The pronounced housing ribbing enables ideal vibration properties and a high running smoothness. The surfaces, including tapped holes, required for installing the suspension brackets and/or the mounting bell are already available on the housing.

The output shaft with the propeller thrust bearing is arranged in the bottom or top part of the housing. The propeller thrust is transmitted from the propeller thrust bearing directly to the foundation stops via the housing with its suspension brackets. The housing is fastened to the foundation by means of screws.

All power transmission gearings are designed for a high level of safety, case-hardened, ground, and subsequently specially treated in order to achieve a high service life and a high level of running smoothness. The shafts are mounted with the help of rolling bearings.

3.1.1 Reverse transmissions and reduction gears

The transmissions are axially offset reverse transmissions and reduction gears in a three-shaft arrangement. A hydraulic multidisk clutch is located on the input shaft and the intermediate shaft respectively. The clutch located on the input shaft and the intermediate shaft is a multidisk clutch. The multidisk clutch is pressed and, consequently, closed by oil pressure.

The transmissions belonging to the NR family are non-reverse transmissions with a multidisk clutch that is optionally located on the input shaft or on the intermediate shaft. The output rotation direction depends on the transmission design and is either opposite to the drive direction or the same as the drive direction.

3.1.1.1 Parallel version

The input shaft is always above the output shaft. The transmission input and the transmission output are located on opposite sides. The input shaft and the output shaft are arranged on axles that run parallel to each other.

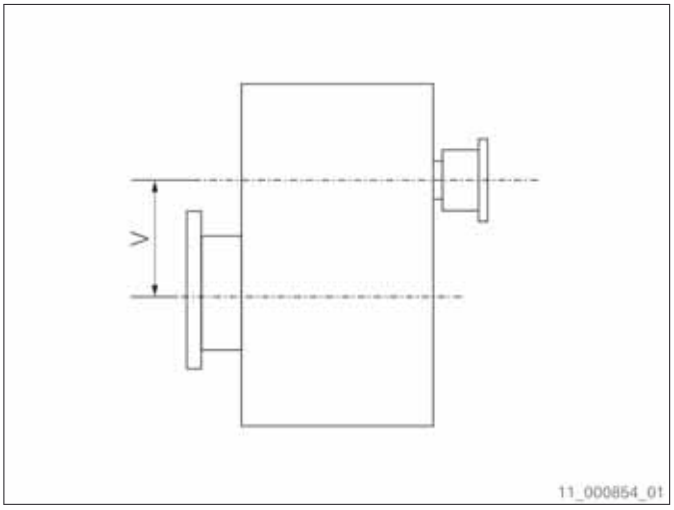

Fig. 1

V Vertical distance between the output shaft and the input shaft

3.1.1.2 A version

The input shaft is always above the output shaft. The transmission input and the transmission output are located on opposite sides.

The transmission output is tilted at an inclination angle α.

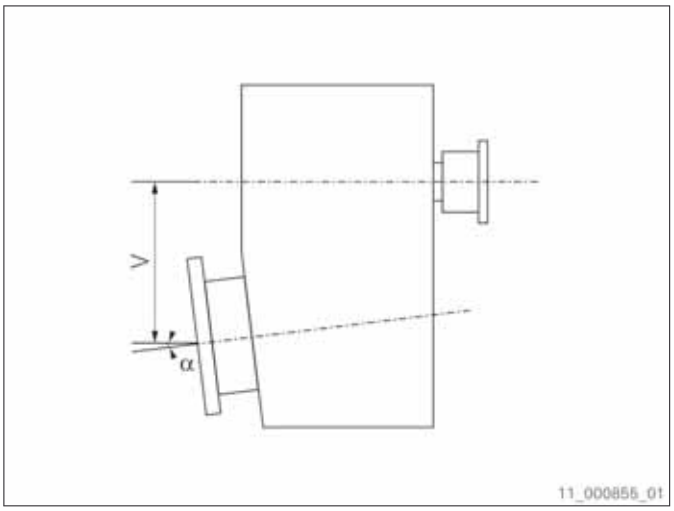

Fig. 2

V Vertical distance between the output shaft and the input shaft
α Inclination angle of the output shaft axle relative to the input shaft axle

3.1.1.3 V version

The input shaft is always above the output shaft. The transmission input and the transmission output are located on the same side.

The transmission output is tilted at an inclination angle α.

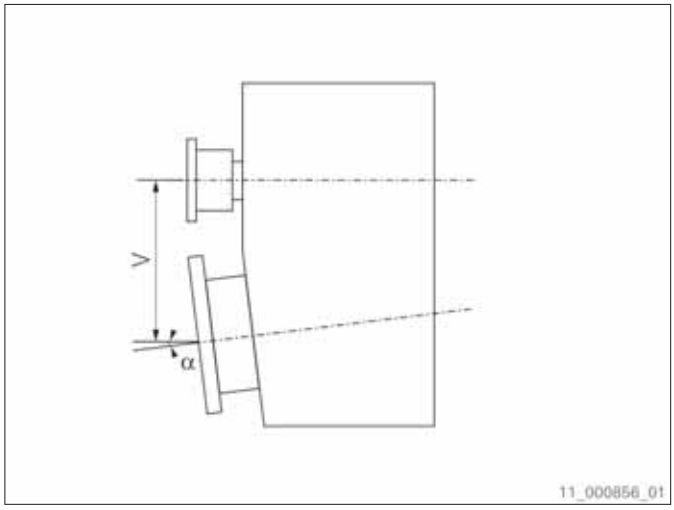

Fig. 3

V Vertical distance between the output shaft and the input shaft
α Inclination angle of the output shaft axle relative to the input shaft axle

3.1.1.4 D version

The input shaft is always above the output shaft. The transmission input and the transmission output are located on opposite sides. The input shaft is arranged diagonally to the output shaft.

The designation L or R describes the location of the output shaft relative to the input shaft when looking towards the transmission output flange.

- L: The output shaft is located to the left of the input shaft.
- R: The output shaft is located to the right of the input shaft.

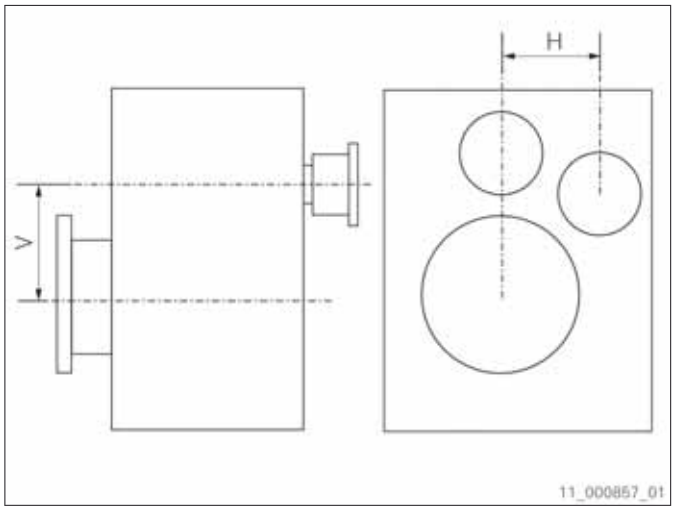

Fig. 4

V Vertical distance between the output shaft and the input shaft
H Horizontal distance between the output shaft and the input shaft

3.1.2 Transmissions with power take-in

The transmissions with a power take-in (PTI) are axially offset reverse transmissions and reduction gears with a four-shaft arrangement. A hydraulic multidisk clutch is located on the input shaft, the intermediate

shaft and the power take-in's input shaft. The clutch located on the power take-in's input shaft is a multidisk clutch. The multidisk clutch is pressed and, consequently, closed by oil pressure.

The transmissions belonging to the NR family are non-reverse transmissions with a multidisk clutch that is optionally located on the input shaft or on the intermediate shaft. The output rotation direction depends on the transmission design and is either opposite to the drive direction or the same as the drive direction.

The input shaft is always above the output shaft. The main drive's transmission input and the transmission output are located on opposite sides. The power take-in's transmission input and the transmission output are located on the same side. The main drive's input shaft and the output shaft are arranged on axles that run parallel to each other. The power take-in's input shaft is arranged diagonally to the output shaft.

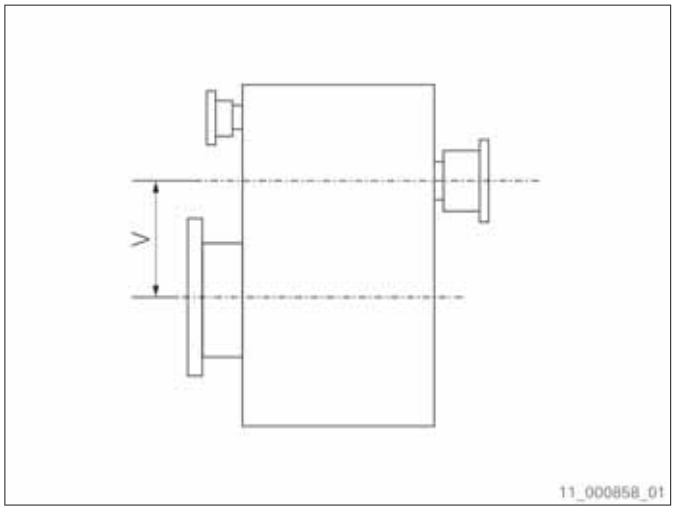

Fig. 5

V Vertical distance between the output shaft and the input shaft

3.1.3 Transmission with hydraulic shaft brake

The transmissions with a hydraulic shaft brake are axially offset reverse transmissions and reduction gears with a four-shaft arrangement. A multidisk clutch is located on the input shaft, intermediate shaft and the fourth shaft, i.e. the shaft brake, respectively. The clutch located on the fourth shaft is a multidisk clutch. The multidisk clutch is pressed and, consequently, closed by oil pressure.

The transmissions belonging to the NR family are reduction gears with a multidisk clutch that is optionally located on the input shaft or on the intermediate shaft. The output rotation direction depends on the transmission design and is either opposite to the drive direction or the same as the drive direction.

3.1.4 Reduction gear without multidisk clutch

Counter-rotation direction
The transmissions are axially offset reduction gears in a two-shaft arrangement or three-shaft arrangement. The input shaft's gearing is in constant mesh with the output gear. Thus, the power transmission between the engine and propeller cannot be interrupted.

Enginewise rotation direction
The transmissions are axially offset reduction gears in a three-shaft arrangement. The power transmission between the input shaft and the intermediate shaft takes place via the gearing of the helical gears. The intermediate shaft's gearing is in constant mesh with the output gear. Thus, the power transmission between the engine and propeller cannot be interrupted.

The input shaft is always located above the output shaft. The transmission input and the transmission output are located on opposite sides. The input shaft and the output shaft are arranged on axles that run parallel to each other.

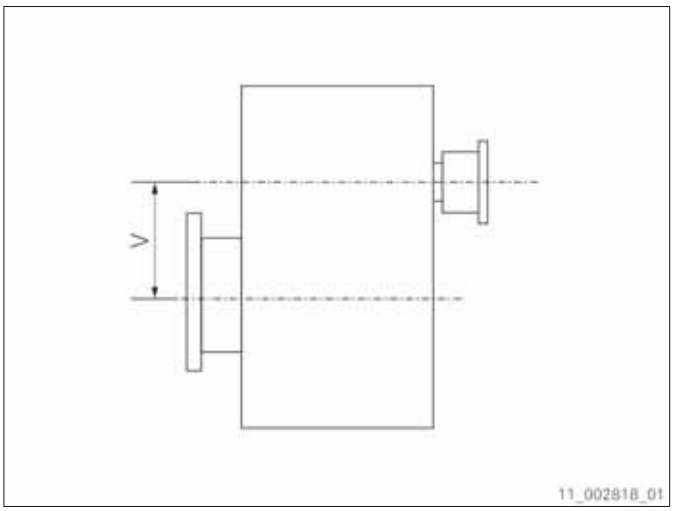

Fig. 6

V Vertical distance between the output shaft and the input shaft

3.2 Transmission views

3.2.1 ZF 3000, ZF 3050, ZF 3055, ZF 3060, ZF 3070, ZF 3000 NR, ZF 3050 NR, ZF 3055 NR, ZF 3060 NR, ZF 3070 NR

The digits in brackets refer to the marked positions in the installation drawing.

With ZF 3070 and ZF 3070 NR transmissions, clamping screws belonging to the counter-rotation emergency control (5) and clamping screws belonging to the enginewise rotation emergency control (11) are not available.

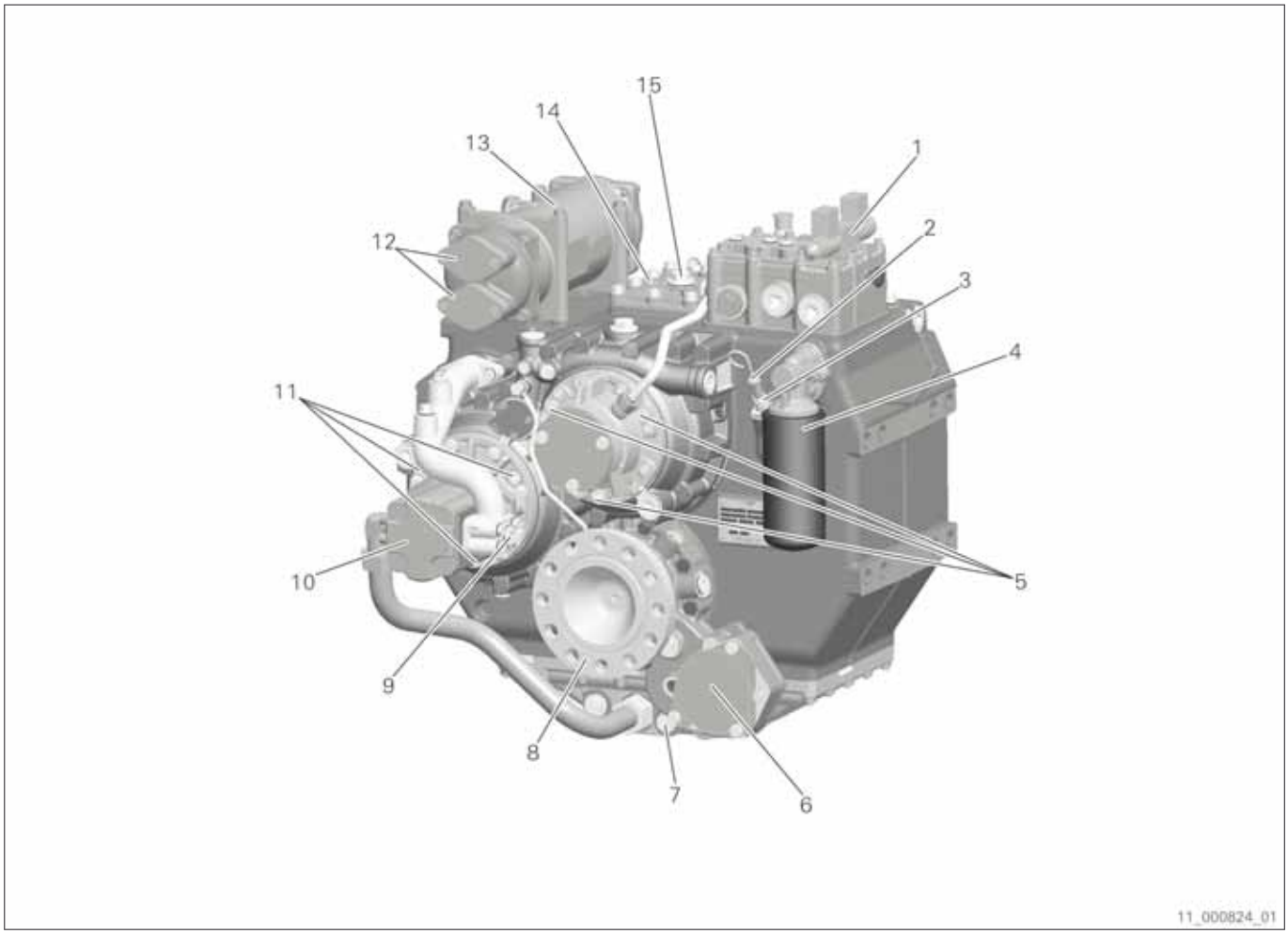

Fig. 7

1 Electric actuation unit (101)
2 Oil dipstick (25)
3 Transmission bleeding (23)
4 Oil filter (33)
5 Clamping screws belonging to the counter-rotation emergency control (34)
6 Position for trailing pump (18)
7 Oil drain (20)
8 Output (26)
9 Pressure connection facility for pump unit (16)
10 Engine-dependent oil pump (10)
11 Clamping screws belonging to the enginewise rotation emergency control (44)
12 Water supply flange (13)
13 Transmission oil cooler (15)
14 Inspection cover (47)
15 Oil filler hole (46)

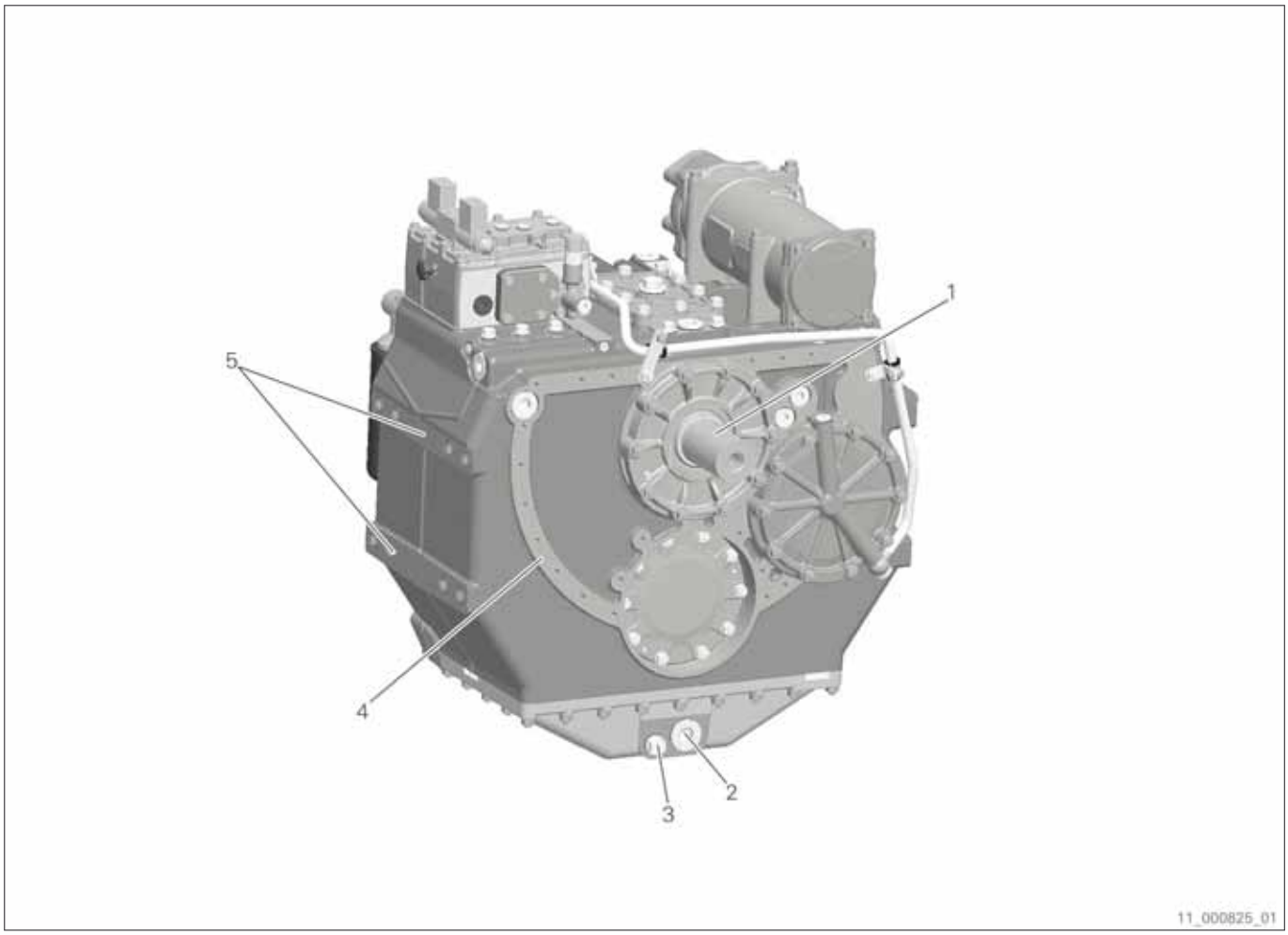

Fig. 8

1 Input (8)
2 Suction connection facility for pump unit (19)
3 Oil drain (20)
4 Mounting flange face for bell (28)
5 Transmission mounting surface (1)

3.2.2 ZF 3000 NC (Counter-rotation), ZF 3050 NC (Counter-rotation), ZF 3055 NC (Counter-rotation), ZF 3060 NC (Counter-rotation)

The digits in brackets refer to the marked positions in the installation drawing.

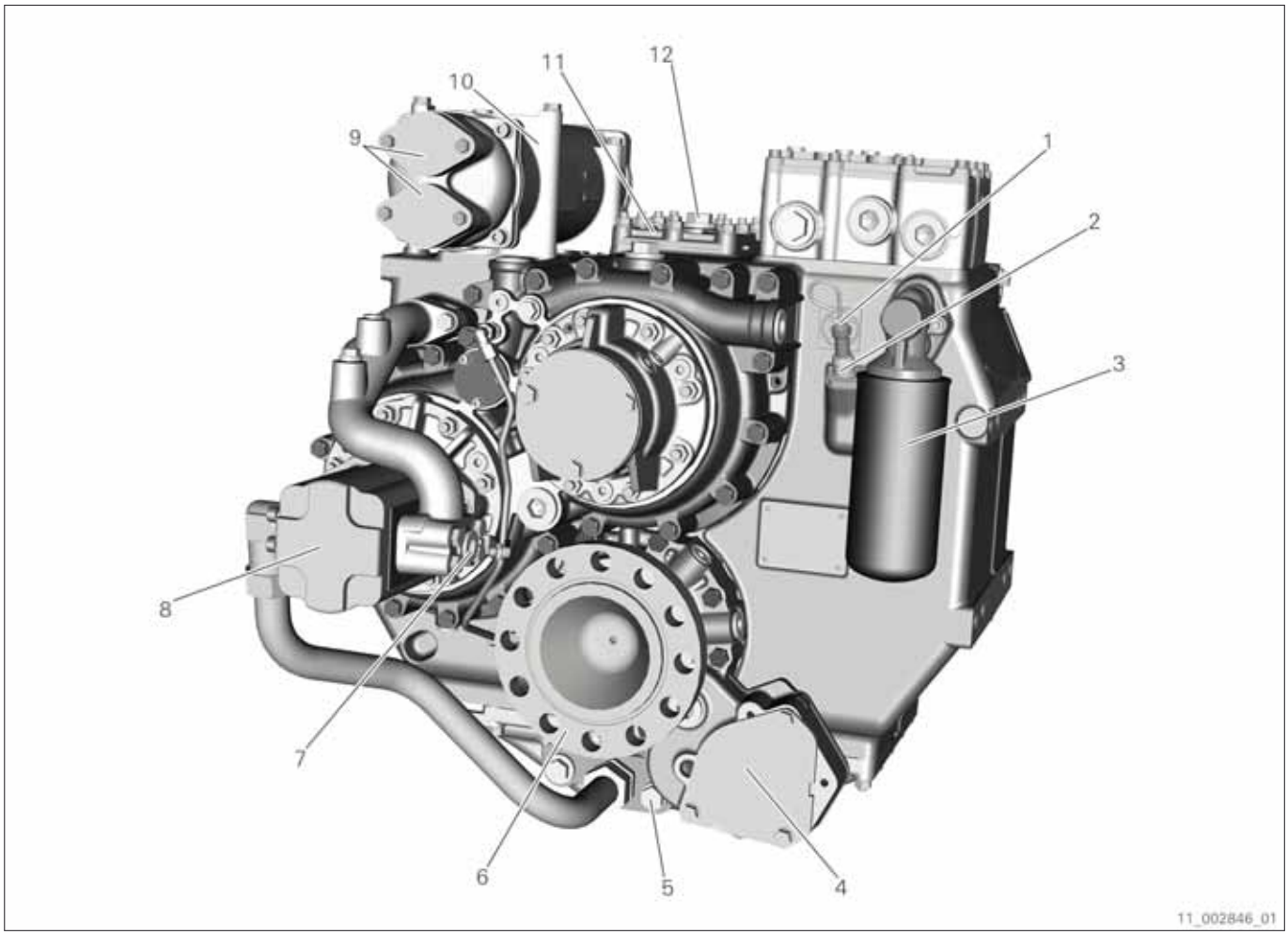

Fig. 9

1 Oil dipstick (25)
2 Transmission bleeding (23)
3 Oil filter (33)
4 Position for trailing pump (18)
5 Oil drain (20)
6 Output (26)
7 Pressure connection facility for pump unit (16)
8 Engine-dependent oil pump (10)
9 Water supply flange (13)
10 Transmission oil cooler (15)
11 Inspection cover (47)
12 Oil filler hole (46)

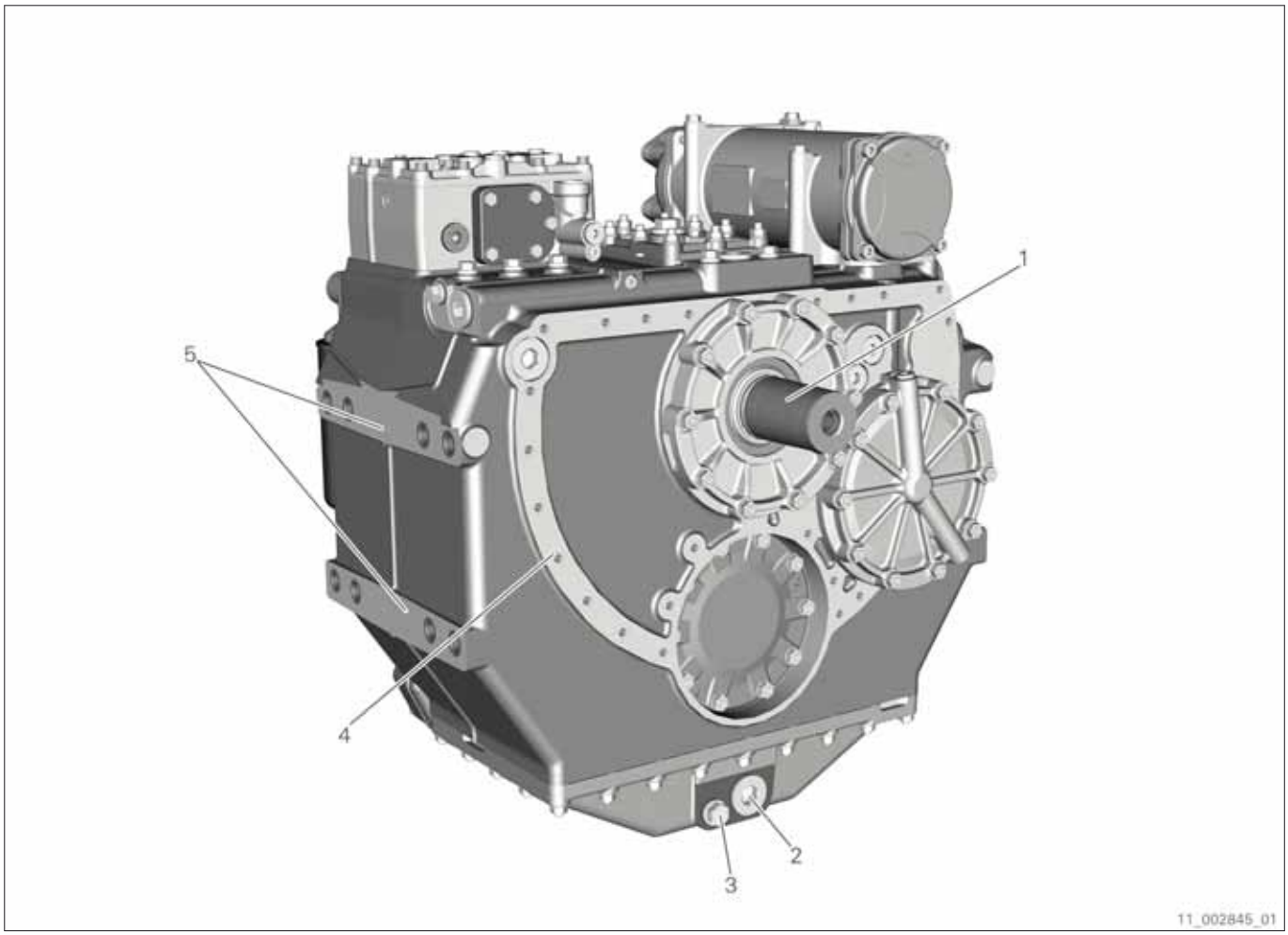

Fig. 10

1 Input (8)
2 Suction connection facility for pump unit (19)
3 Oil drain (20)
4 Mounting flange face for bell (28)
5 Transmission mounting surface (1)

3.2.3 ZF 3000 A, ZF 3050 A, ZF 3055 A, ZF 3060 A, ZF 3070 A, ZF 3150 A, ZF 3160 A, ZF 3170 A, ZF 3000 NRA, ZF 3050 NRA, ZF 3055 NRA, ZF 3060 NRA, ZF 3070 NRA, ZF 3150 NRA, ZF 3160 NRA, ZF 3170 NRA

The digits in brackets refer to the marked positions in the installation drawing.

With the ZF 3070 A and ZF 3070 NRA transmissions, clamping screws belonging to the counter-rotation emergency control (5) and clamping screws belonging to the enginewise rotation emergency control (11) are not available.

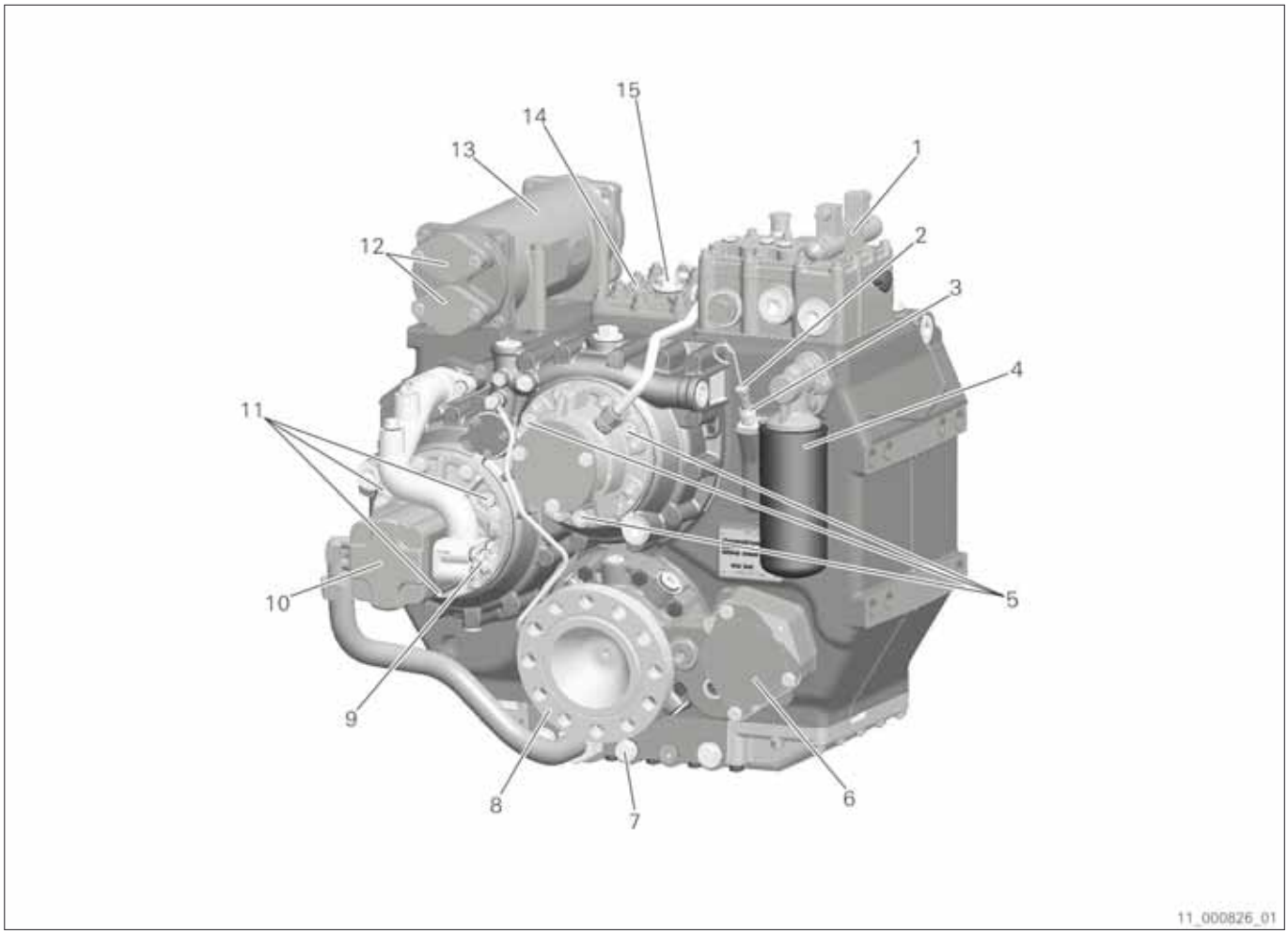

Fig. 11

1 Electric actuation unit (101)
2 Oil dipstick (25)
3 Transmission bleeding (23)
4 Oil filter (33)
5 Clamping screws belonging to the counter-rotation emergency control (34)
6 Position for trailing pump (18)
7 Oil drain (20)
8 Output (26)
9 Pressure connection facility for pump unit (16)
10 Engine-dependent oil pump (10)
11 Clamping screws belonging to the enginewise rotation emergency control (44)
12 Water supply flange (13)
13 Transmission oil cooler (15)
14 Inspection cover (47)
15 Oil filler hole (46)

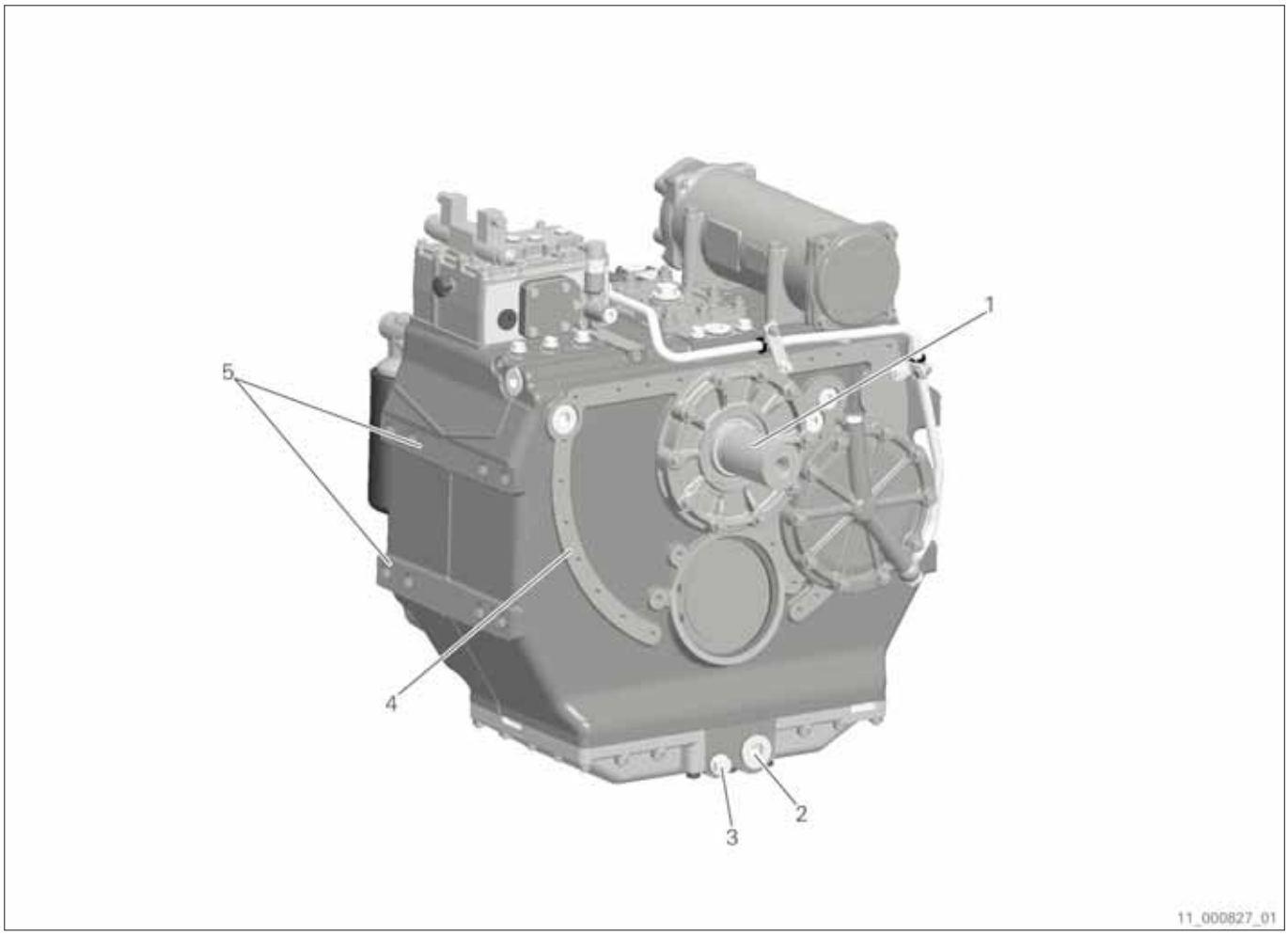

Fig. 12

1 Input (8)
2 Suction connection facility for pump unit (19)
3 Oil drain (20)
4 Mounting flange face for bell (28)
5 Transmission mounting surface (1)

3.2.4 ZF 3000 V, ZF 3050 V, ZF 3055 V, ZF 3060 V, ZF 3070 V, ZF 3000 NRV, ZF 3050 NRV, ZF 3055 NRV, ZF 3060 NRV, ZF 3070 NRV

The digits in brackets refer to the marked positions in the installation drawing.

With ZF 3070 V and ZF 3070 NRV transmissions, clamping screws belonging to the enginewise rotation emergency control (10) are not available.

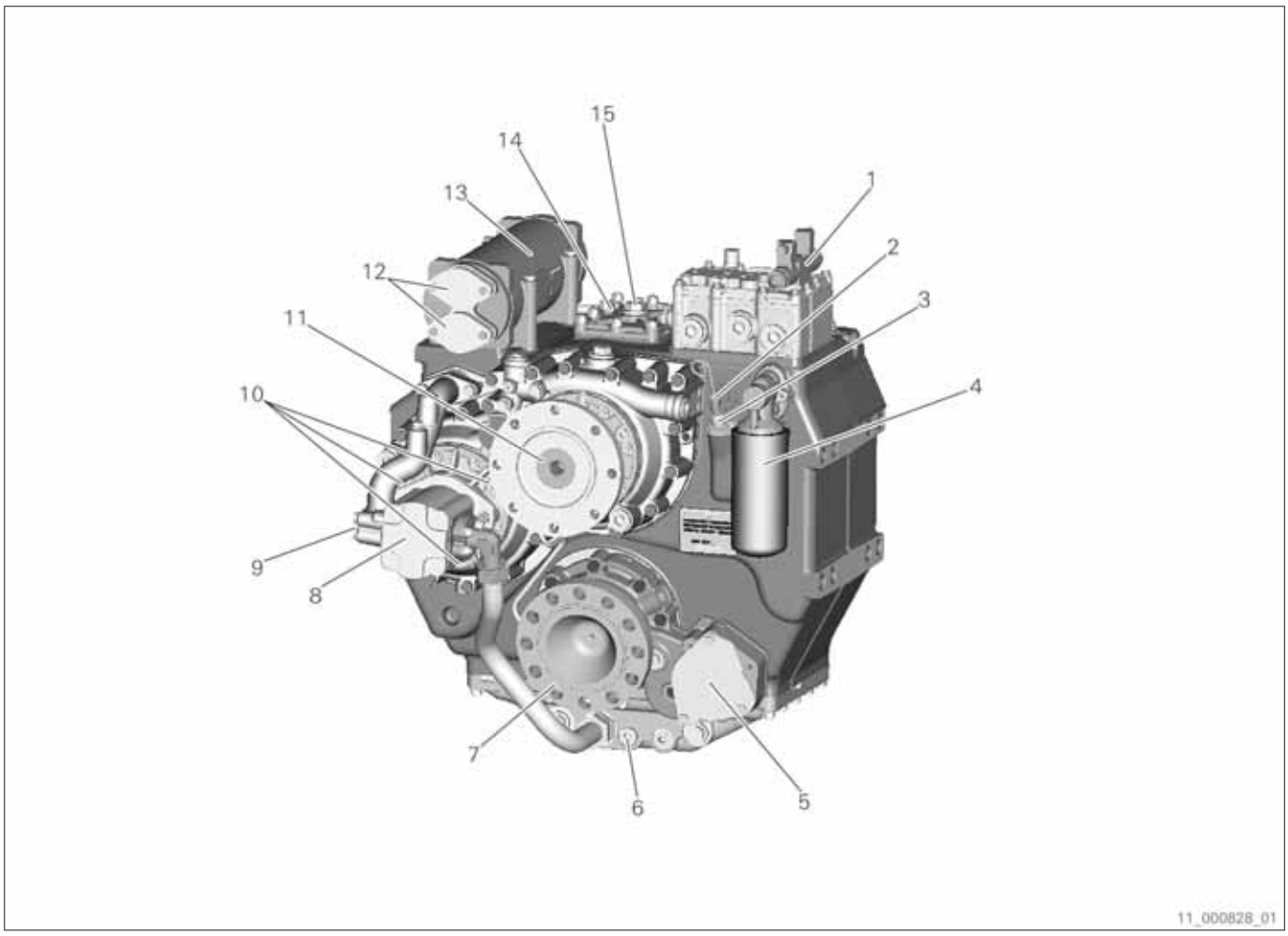

Fig. 13

1 Electric actuation unit (101)
2 Oil dipstick (25)
3 Transmission bleeding (23)
4 Oil filter (33)
5 Position for trailing pump (18)
6 Oil drain (20)
7 Output (26)
8 Engine-dependent oil pump (10)
9 Pressure connection facility for pump unit (16)
10 Clamping screws belonging to the enginewise rotation emergency control (44)
11 Input
12 Water supply flange (13)
13 Transmission oil cooler (15)
14 Inspection cover (47)
15 Oil filler hole (46)

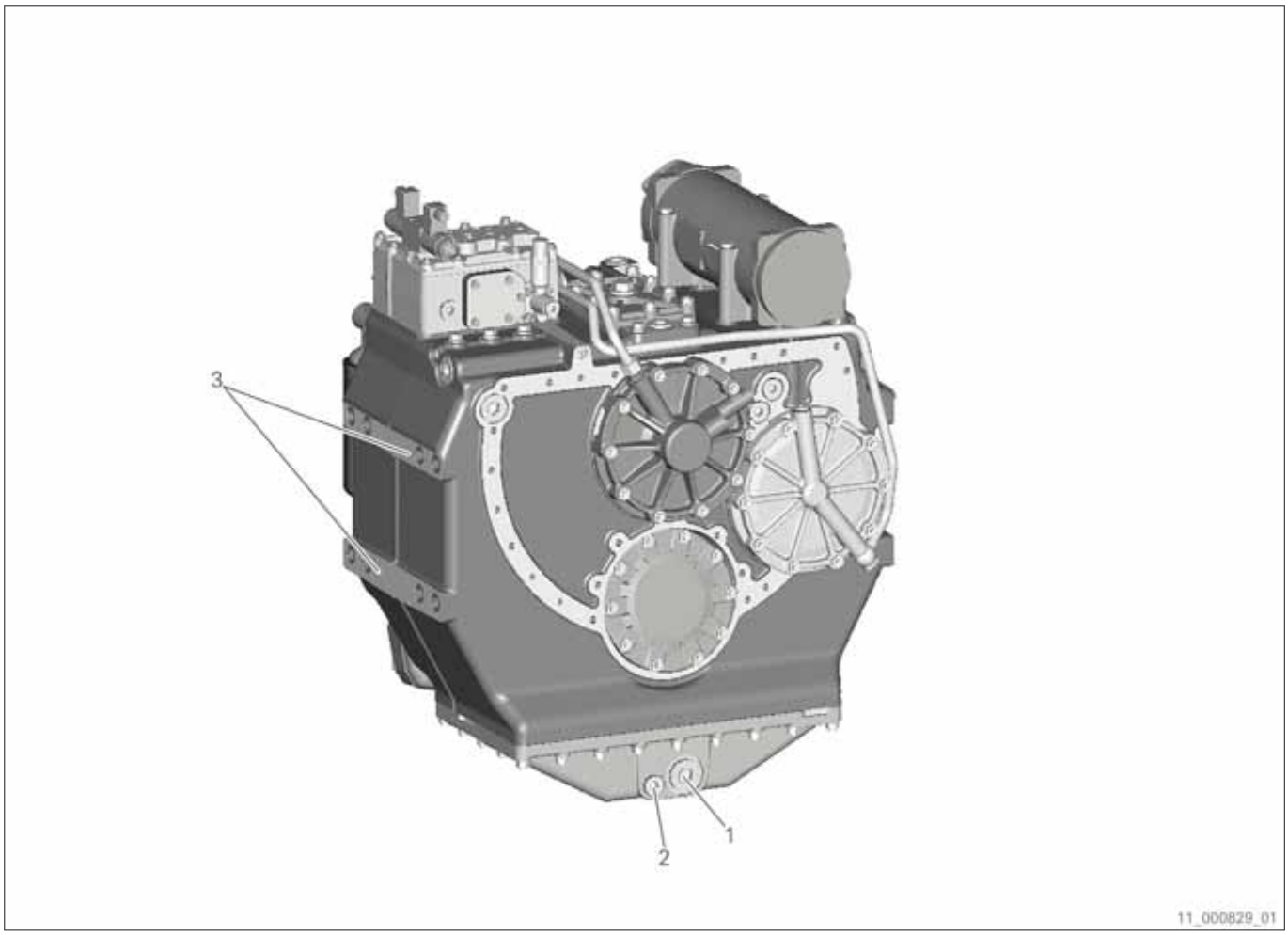

Fig. 14

1 Suction connection facility for pump unit (19)
2 Oil drain (20)
3 Transmission mounting surface (1)

3.2.5 ZF 3050 D, ZF 3055 D, ZF 3060 D

The digits in brackets refer to the marked positions in the installation drawing.

The following figures show the ZF 3060 DL transmission version.

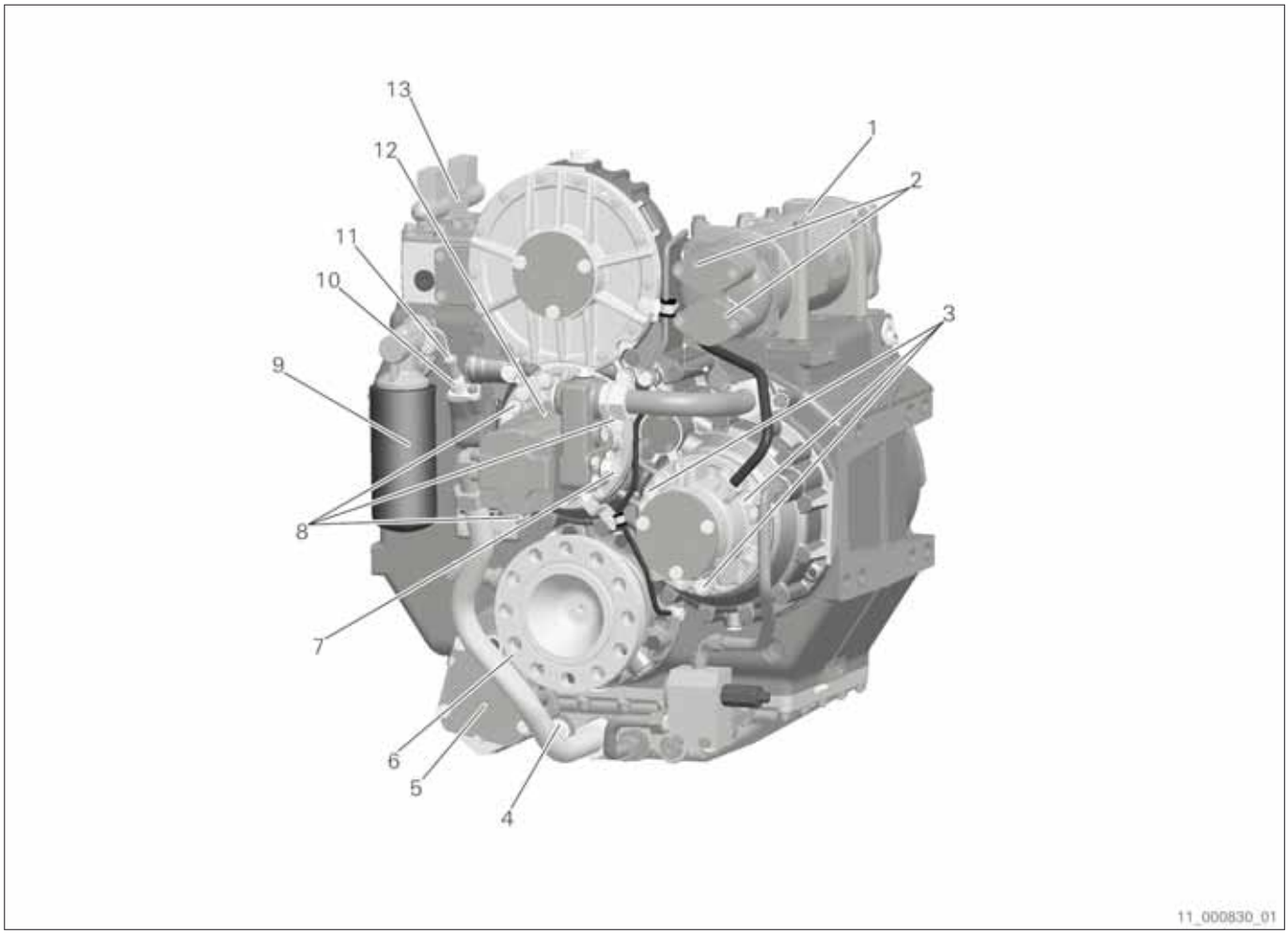

Fig. 15

1 Transmission oil cooler (15)
2 Water supply flange (13)
3 Clamping screws belonging to the counter-rotation emergency control (34)
4 Oil drain (20)
5 Position for trailing pump (18)
6 Output (26)
7 Pressure connection facility for pump unit (16)
8 Clamping screws belonging to the enginewise rotation emergency control (44)
9 Oil filter (33)
10 Transmission bleeding (23)
11 Oil dipstick (25)
12 Engine-dependent oil pump (10)
13 Electric actuation unit (101)

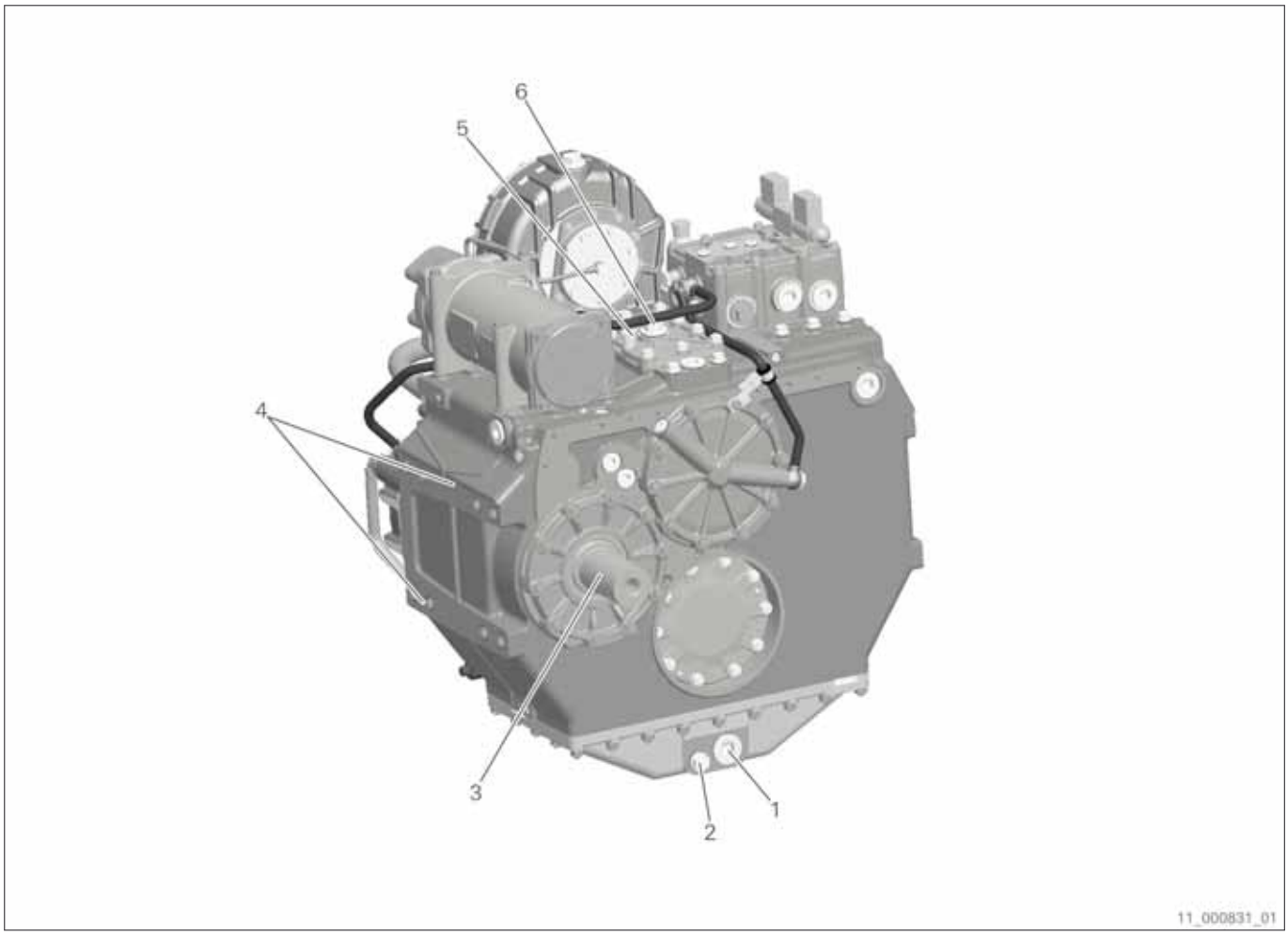

Fig. 16

1 Suction connection facility for pump unit (19)
2 Oil drain (20)
3 Input (8)
4 Transmission mounting surface (1)
5 Inspection cover (47)
6 Oil filler hole (46)

3.2.6 ZF 3310, ZF 3350, ZF 3355, ZF 3360, ZF 3370, ZF 3310 NR, ZF 3350 NR, ZF 3355 NR, ZF 3360 NR, ZF 3370 NR

The digits in brackets refer to the marked positions in the installation drawing.

With ZF 3370 and ZF 3370 NR transmissions, clamping screws belonging to the counter-rotation emergency control (1) and clamping screws belonging to the enginewise rotation emergency control (10) are not available.

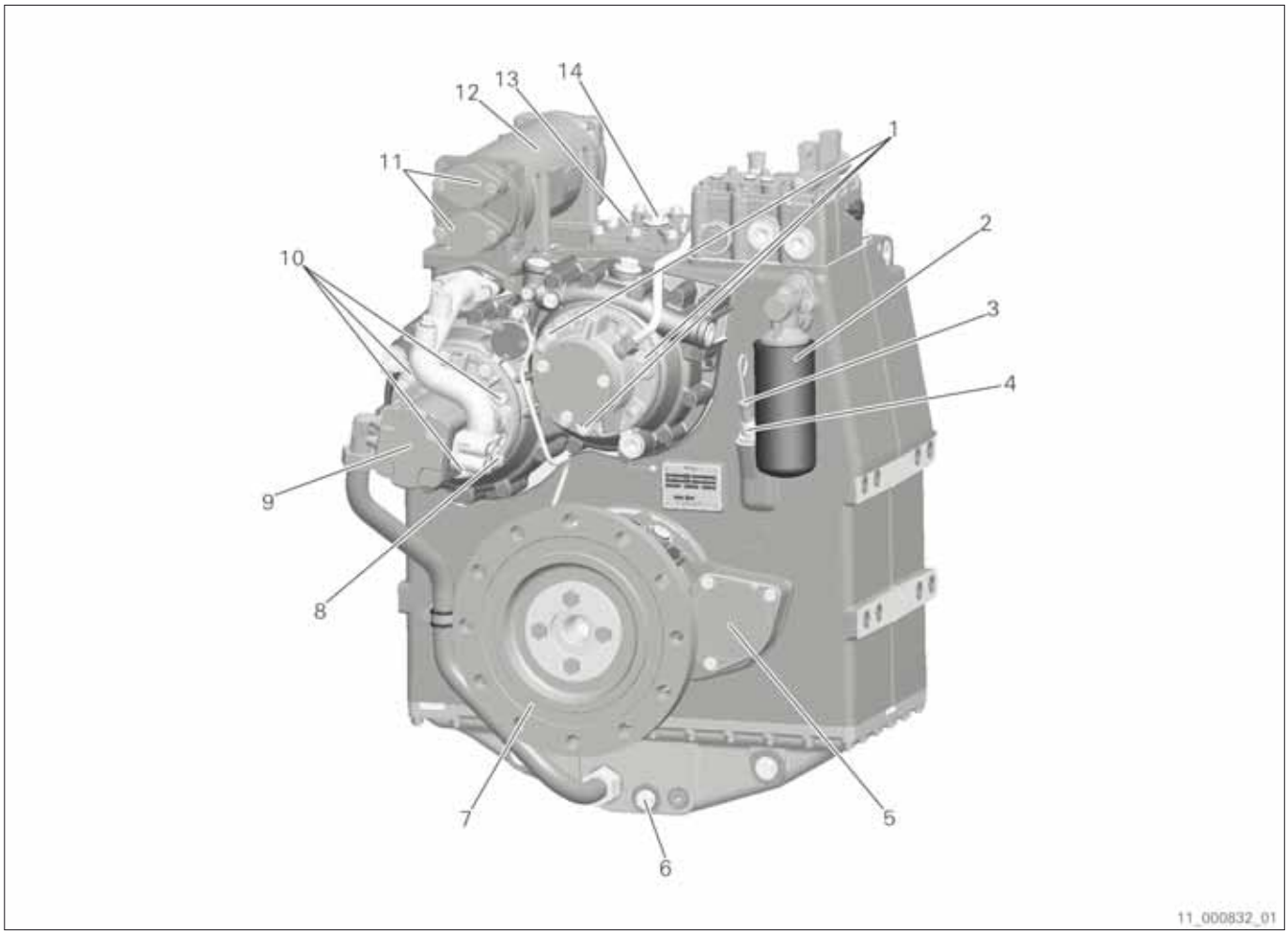

Fig. 17

1 Clamping screws belonging to the counter-rotation emergency control (34)
2 Oil filter (33)
3 Oil dipstick (25)
4 Transmission bleeding (23)
5 Position for trailing pump (18)
6 Oil drain (20)
7 Output (26)
8 Pressure connection facility for pump unit (16)
9 Engine-dependent oil pump (10)
10 Clamping screws belonging to the enginewise rotation emergency control (44)
11 Water supply flange (13)
12 Transmission oil cooler (15)
13 Inspection cover (47)
14 Oil filler hole (46)

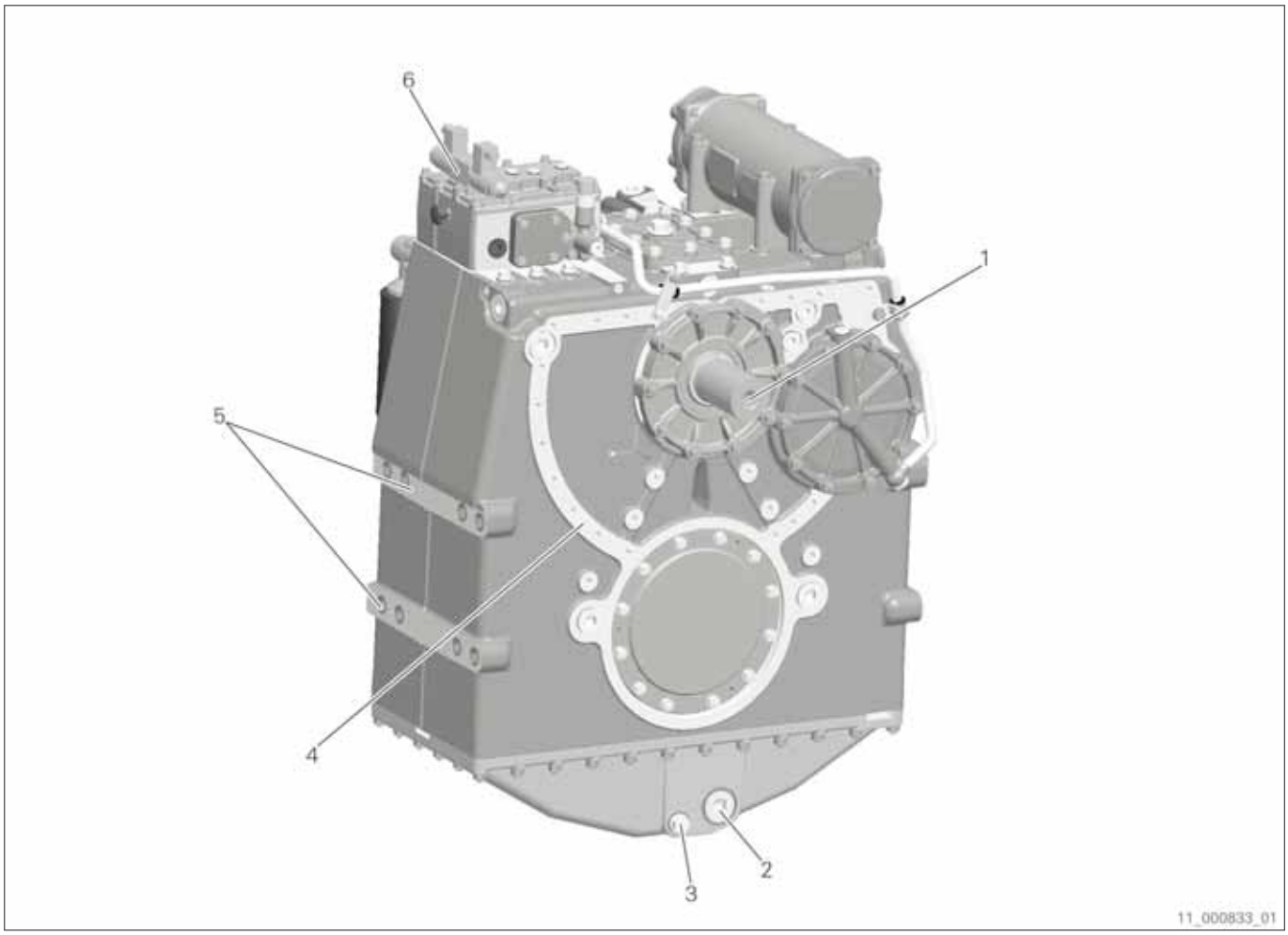

Fig. 18

1 Input (8)
2 Suction connection facility for pump unit (19)
3 Oil drain (20)
4 Mounting flange face for bell (28)
5 Transmission mounting surface (1)
6 Electric actuation unit (101)

3.2.7 ZF 3310 NC (Enginewise rotation), ZF 3350 NC (Enginewise rotation), ZF 3355 NC (Enginewise rotation), ZF 3360 NC (Enginewise rotation)

The digits in brackets refer to the marked positions in the installation drawing.

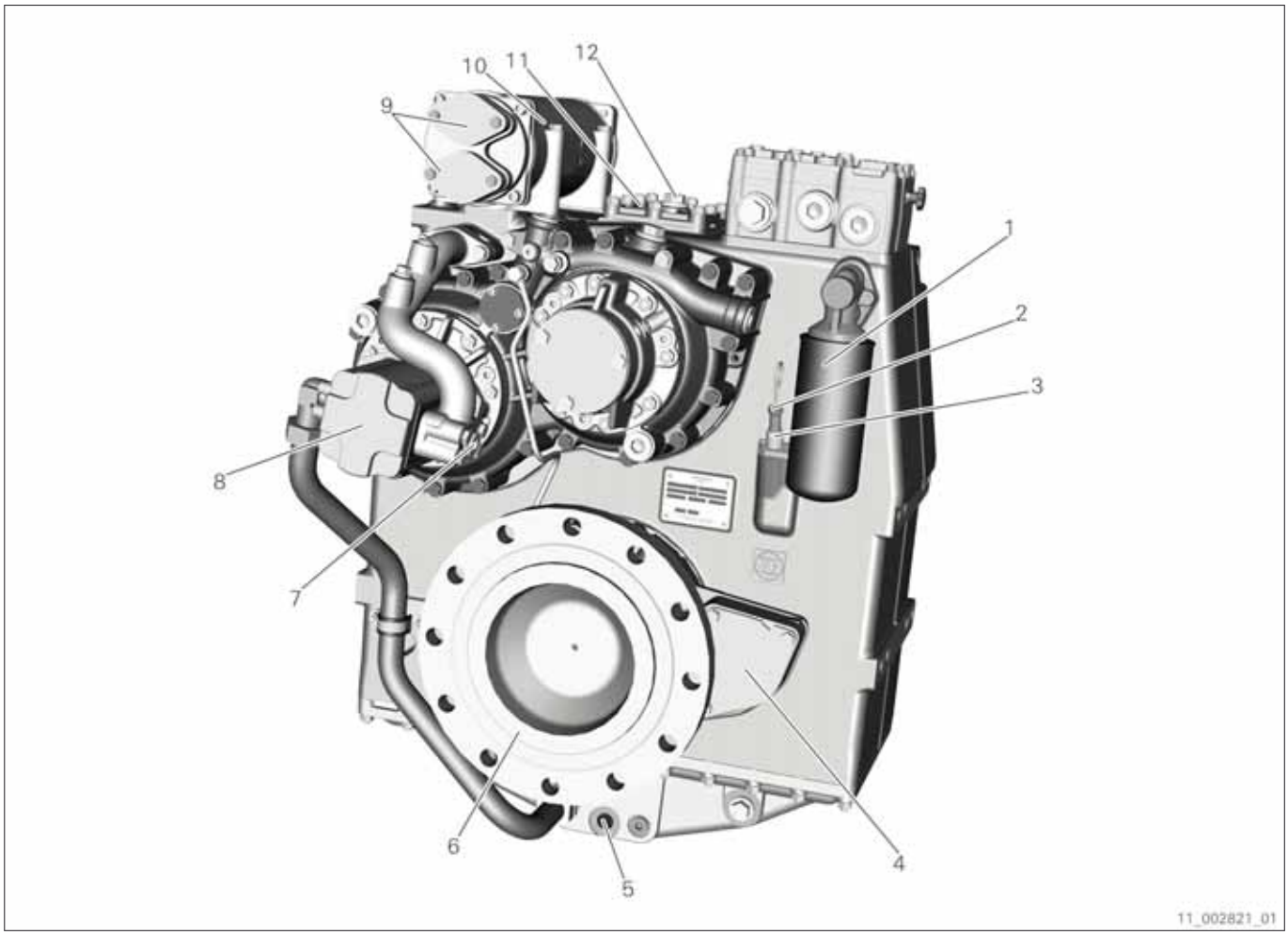

Fig. 19

1 Oil filter (33)
2 Oil dipstick (25)
3 Transmission bleeding (23)
4 Position for trailing pump (18)
5 Oil drain (20)
6 Output (26)
7 Pressure connection facility for pump unit (16)
8 Engine-dependent oil pump (10)
9 Water supply flange (13)
10 Transmission oil cooler (15)
11 Inspection cover (47)
12 Oil filler hole (46)

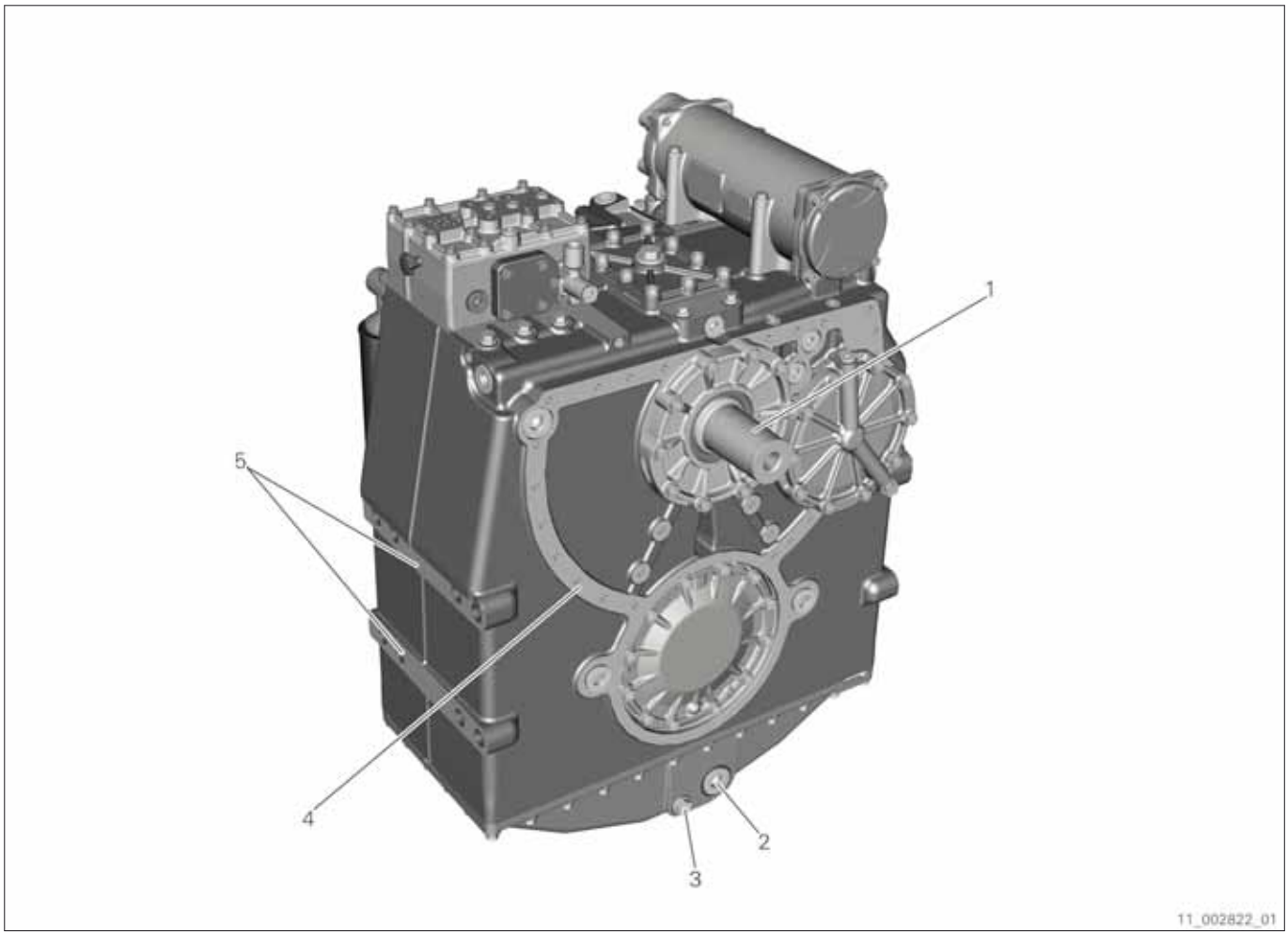

Fig. 20

1 Input (8)
2 Suction connection facility for pump unit (19)
3 Oil drain (20)
4 Mounting flange face for bell (28)
5 Transmission mounting surface (1)

3.2.8 ZF 3311, ZF 3351, ZF 3356, ZF 3361, ZF 3311 NR, ZF 3351 NR, ZF 3356 NR, ZF 3361 NR

The digits in brackets refer to the marked positions in the installation drawing.

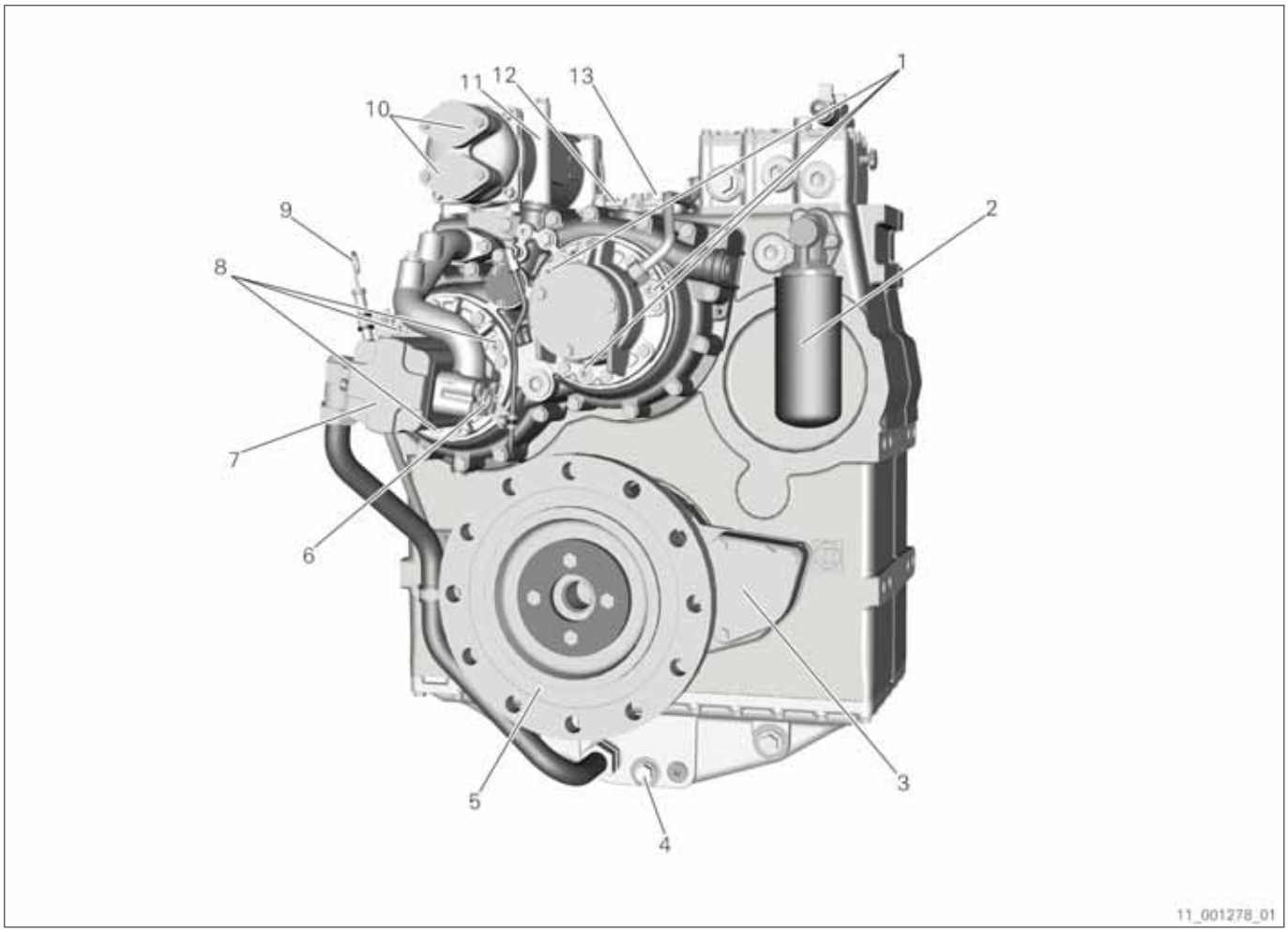

Fig. 21

1 Clamping screws belonging to the counter-rotation emergency control (34)
3 Position for trailing pump (18)
5 Output (26)
7 Engine-dependent oil pump (10)
9 Oil dipstick (25)
11 Transmission oil cooler (15)
13 Oil filler hole (46)
2 Oil filter (33)
4 Oil drain (20)
6 Pressure connection facility for pump unit (16)
8 Clamping screws belonging to the enginewise rotation emergency control (44)
10 Water supply flange (13)
12 Inspection cover (47)

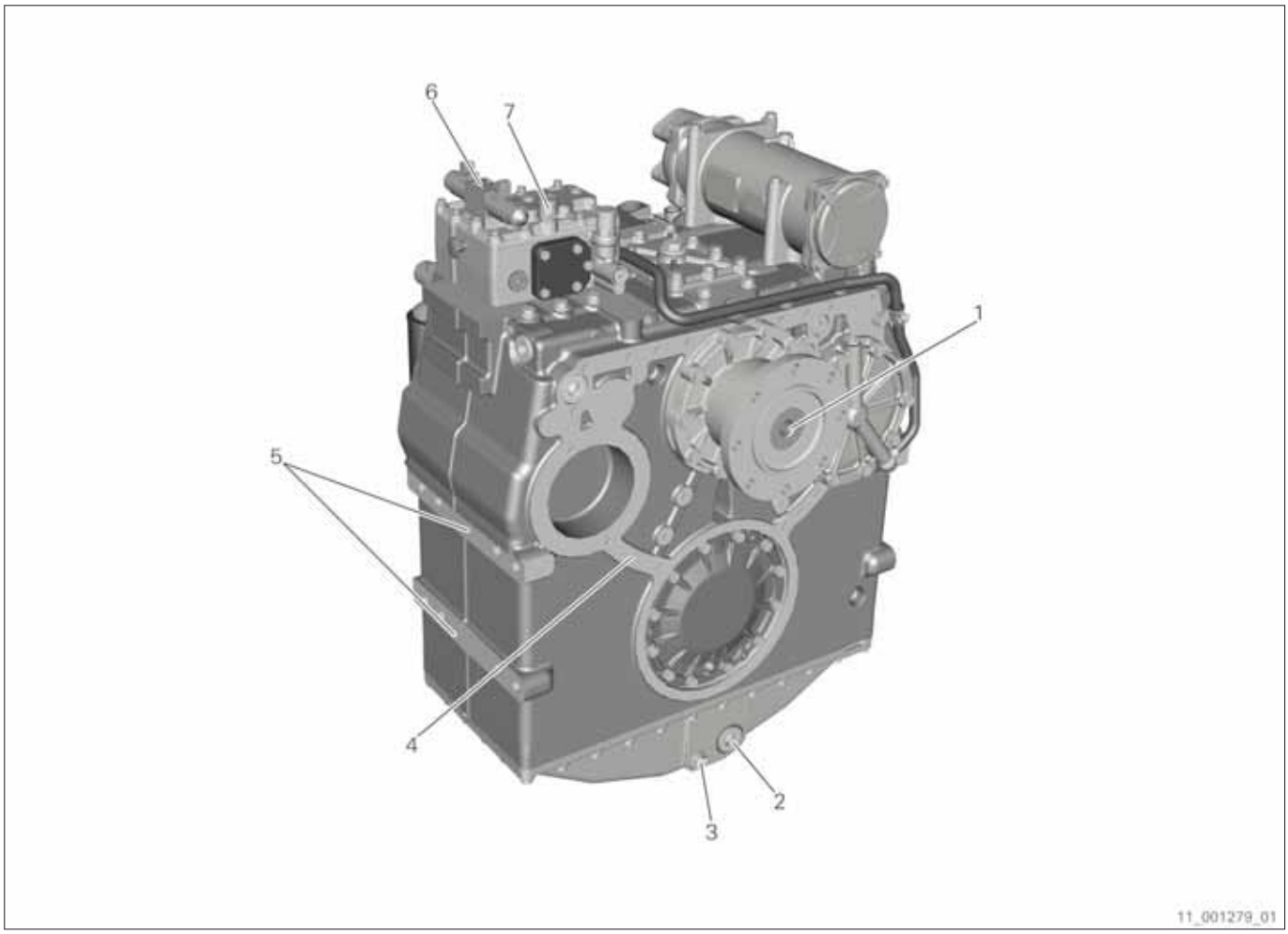

Fig. 22

1 Input (8)
2 Suction connection facility for pump unit (19)
3 Oil drain (20)
4 Mounting flange face for bell (28)
5 Transmission mounting surface (1)
6 Electric actuation unit (101)
7 Transmission bleeding (23)

3.2.9 ZF 3311 NC (Counter-rotation), ZF 3351 NC (Counter-rotation), ZF 3356 NC (Counter-rotation), ZF 3361 NC (Counter-rotation)

The digits in brackets refer to the marked positions in the installation drawing.

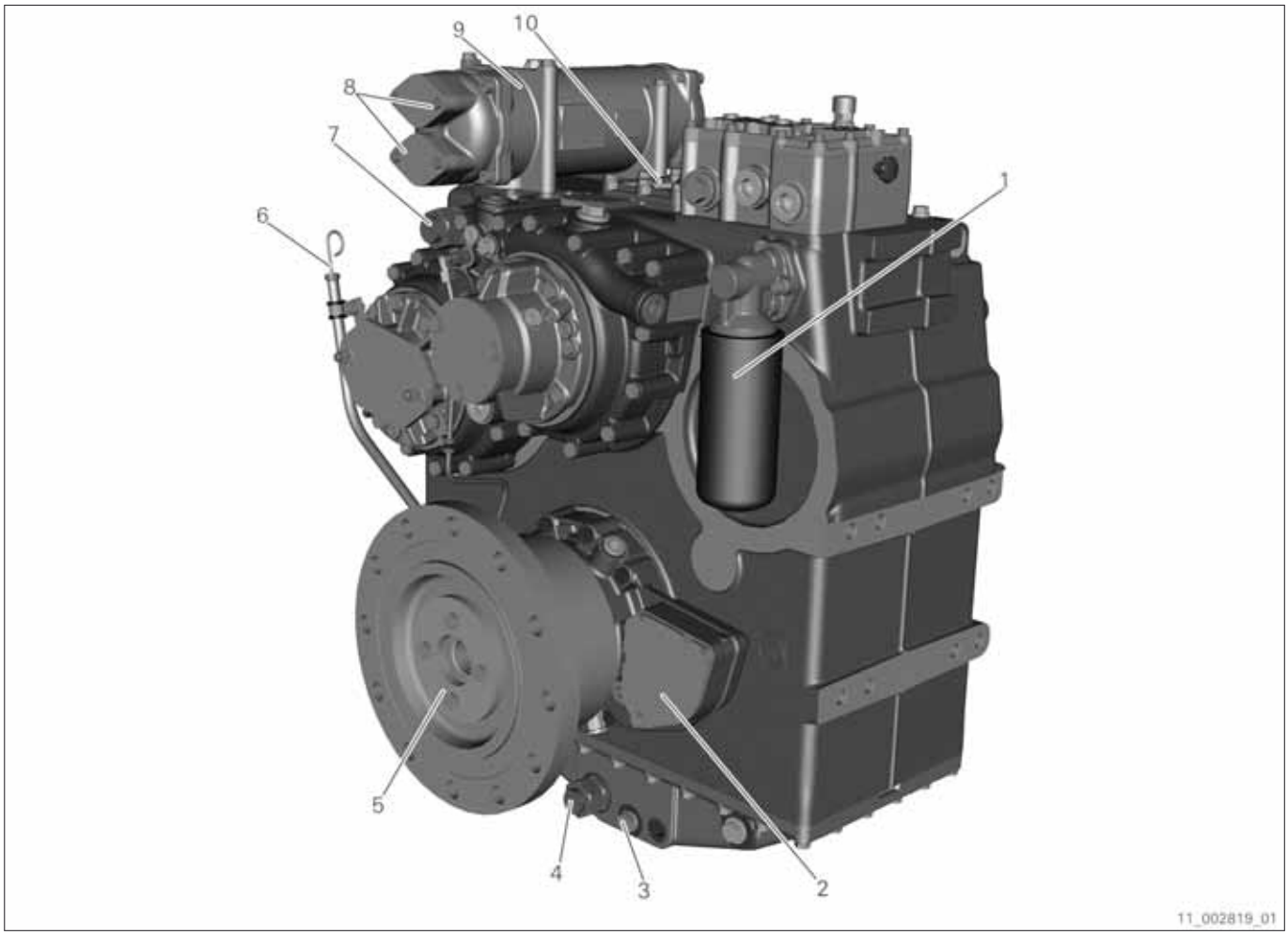

Fig. 23

1 Oil filter (33)
2 Position for trailing pump (18)
3 Oil drain (20)
4 Suction connection facility for pump unit (19)
5 Output (26)
6 Oil dipstick (25)
7 Pressure connection facility for pump unit (16)
8 Water supply flange (13)
9 Transmission oil cooler (15)
10 Inspection cover (47)

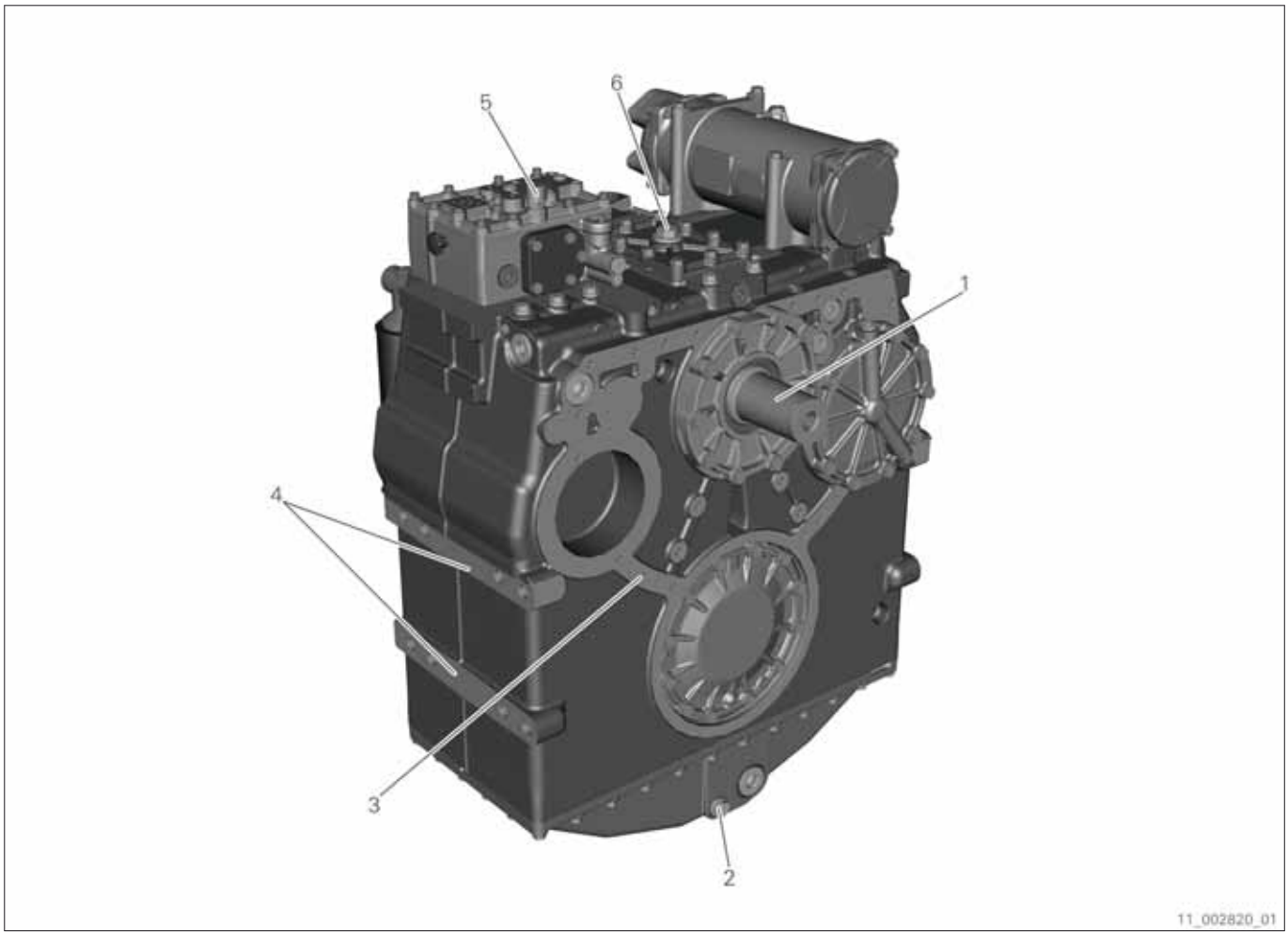

Fig. 24

1 Input (8)
2 Oil drain (20)
3 Mounting flange face for bell (28)
4 Transmission mounting surface (1)
5 Transmission bleeding (23)
6 Oil filler hole (46)

3.2.10 ZF 3311, ZF 3351, ZF 3356, ZF 3361, ZF 3311 NR, ZF 3351 NR, ZF 3356 NR, ZF 3361 NR with power take-in

The digits in brackets refer to the marked positions in the installation drawing.

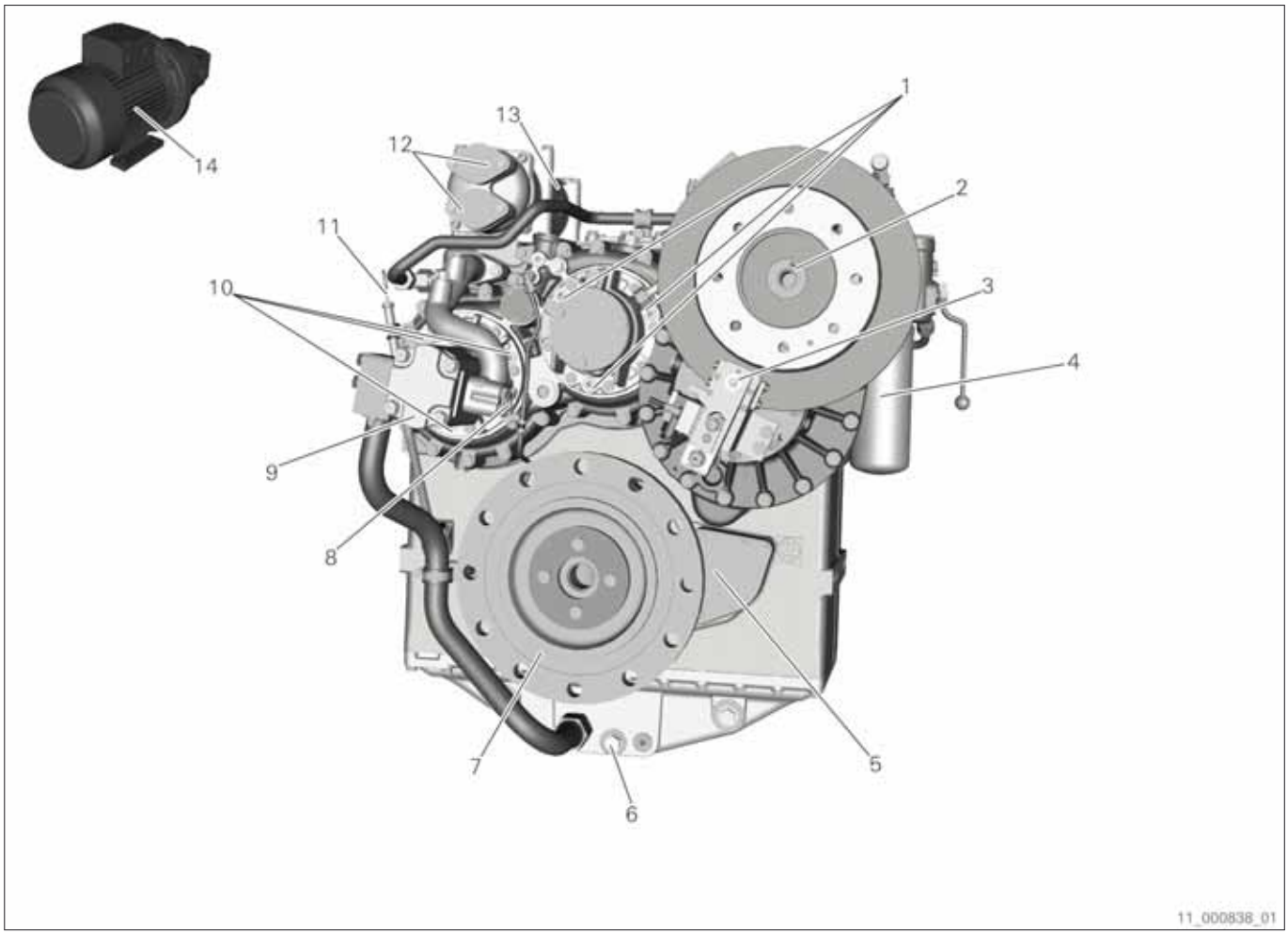

Fig. 25

1 Clamping screws belonging to the counter-rotation emergency control (34)
2 Input shaft for power take-in (150)
3 Brake for power take-in (252)
4 Oil filter (33)
5 Position for trailing pump (18)
6 Oil drain (20)
7 Output (26)
8 Pressure connection facility for pump unit (16)
9 Engine-dependent oil pump (10)
10 Clamping screws belonging to the enginewise rotation emergency control (44)
11 Oil dipstick (25)
12 Water supply flange (13)
13 Transmission oil cooler (15)
14 Oil pump for power take-in (208)

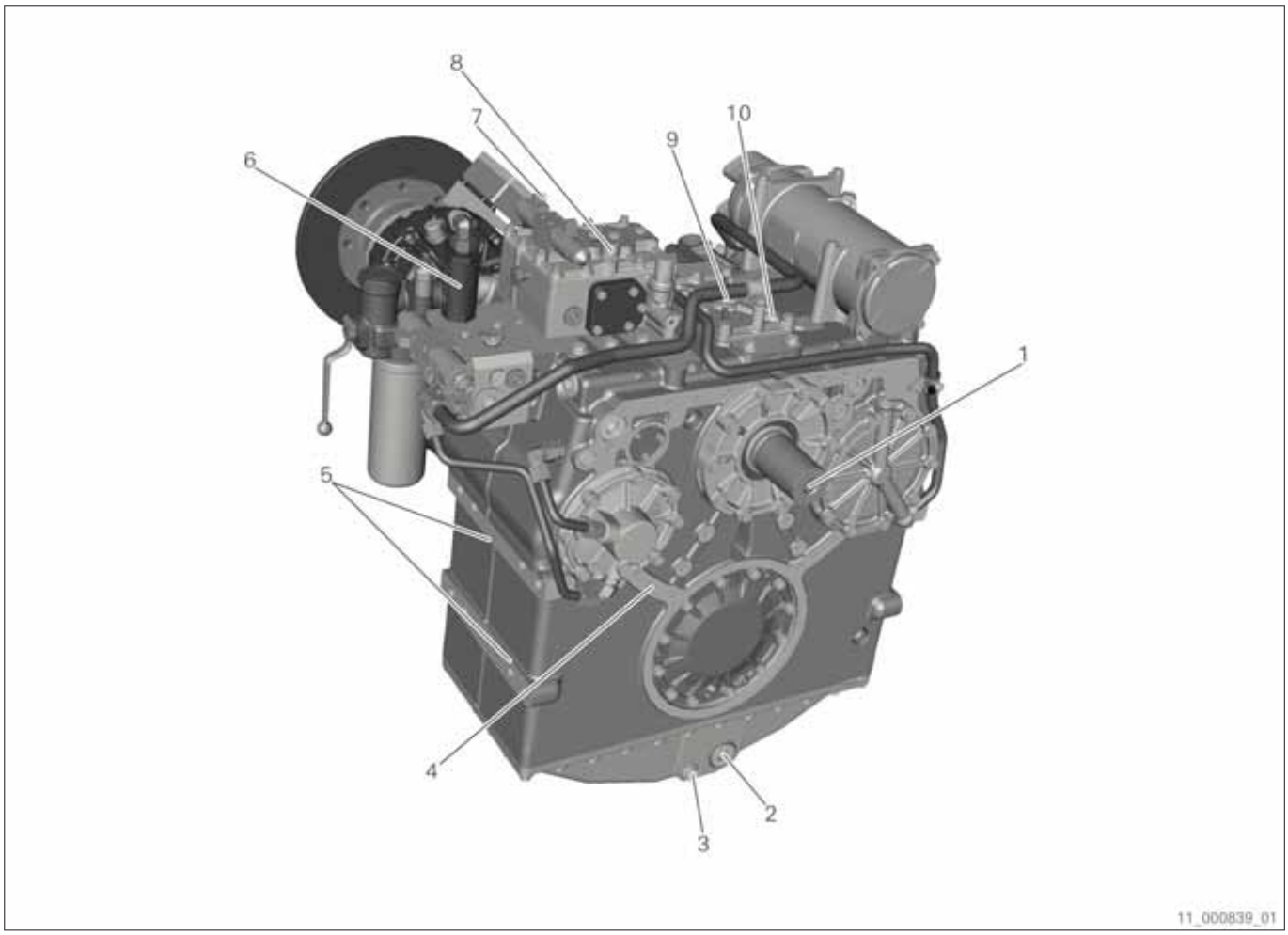

Fig. 26

1 Input (8)
2 Suction connection facility for pump unit (19)
3 Oil drain (20)
4 Mounting flange face for bell (28)
5 Transmission mounting surface (1)
6 Oil filter for power take-in
7 Electric actuation unit (101)
8 Transmission bleeding (23)
9 Oil filler hole (46)
10 Inspection cover (47)

3.2.11 ZF 3311, ZF 3351, ZF 3356, ZF 3361, ZF 3311 NR, ZF 3351 NR, ZF 3356 NR, ZF 3361 NR with shaft brake

The digits in brackets refer to the marked positions in the installation drawing.

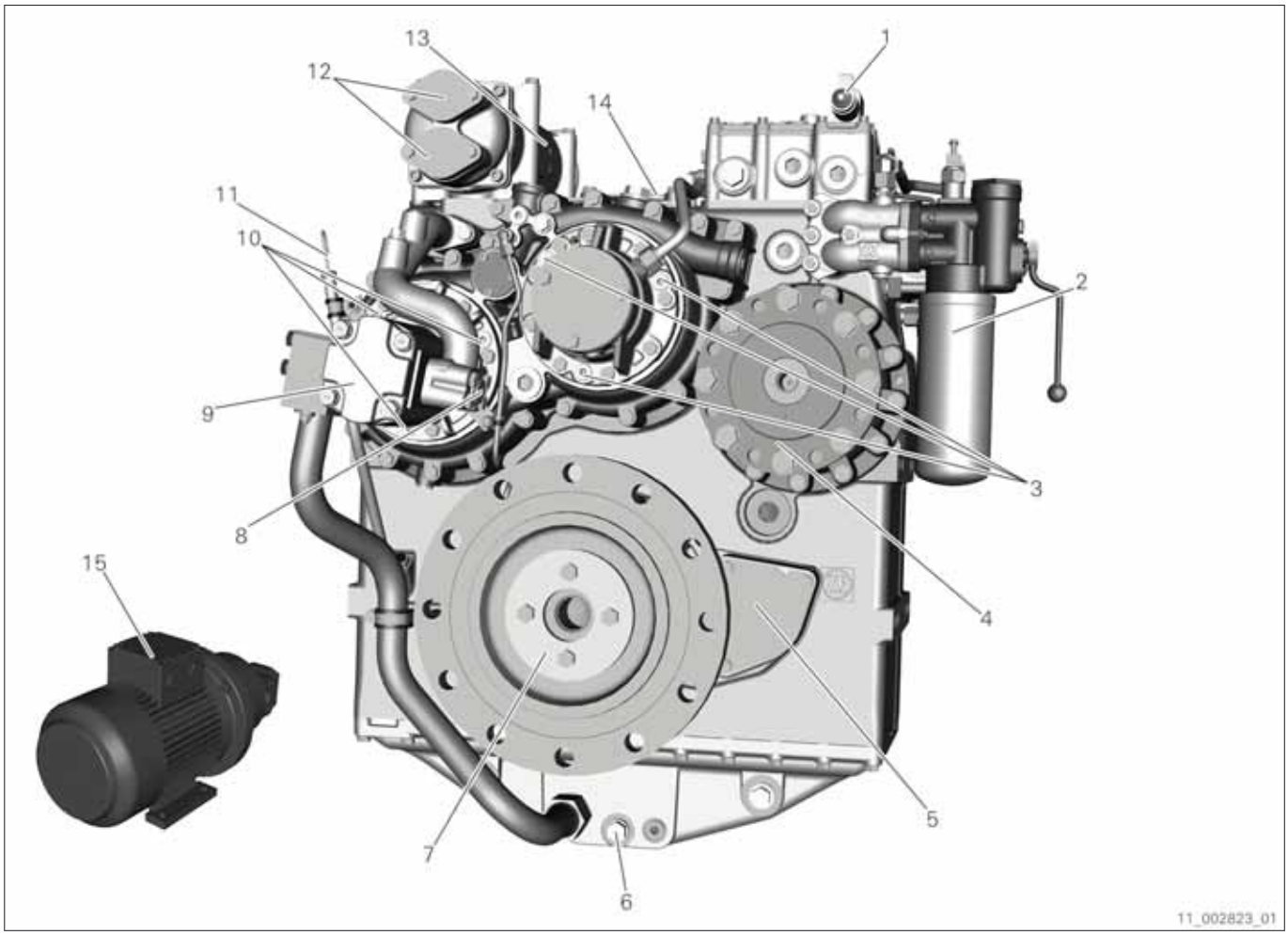

Fig. 27

1 Electric actuation unit (101)
3 Clamping screws belonging to the counter-rotation emergency control (34)
5 Position for trailing pump (18)
7 Output (26)
9 Engine-dependent oil pump (10)
11 Oil dipstick (25)
13 Transmission oil cooler (15)
15 Oil pump for shaft brake (208)
2 Oil filter (33)
4 Shaft brake (252)
6 Oil drain (20)
8 Pressure connection facility for pump unit (16)
10 Clamping screws belonging to the enginewise rotation emergency control (44)
12 Water supply flange (13)
14 Inspection cover (47)

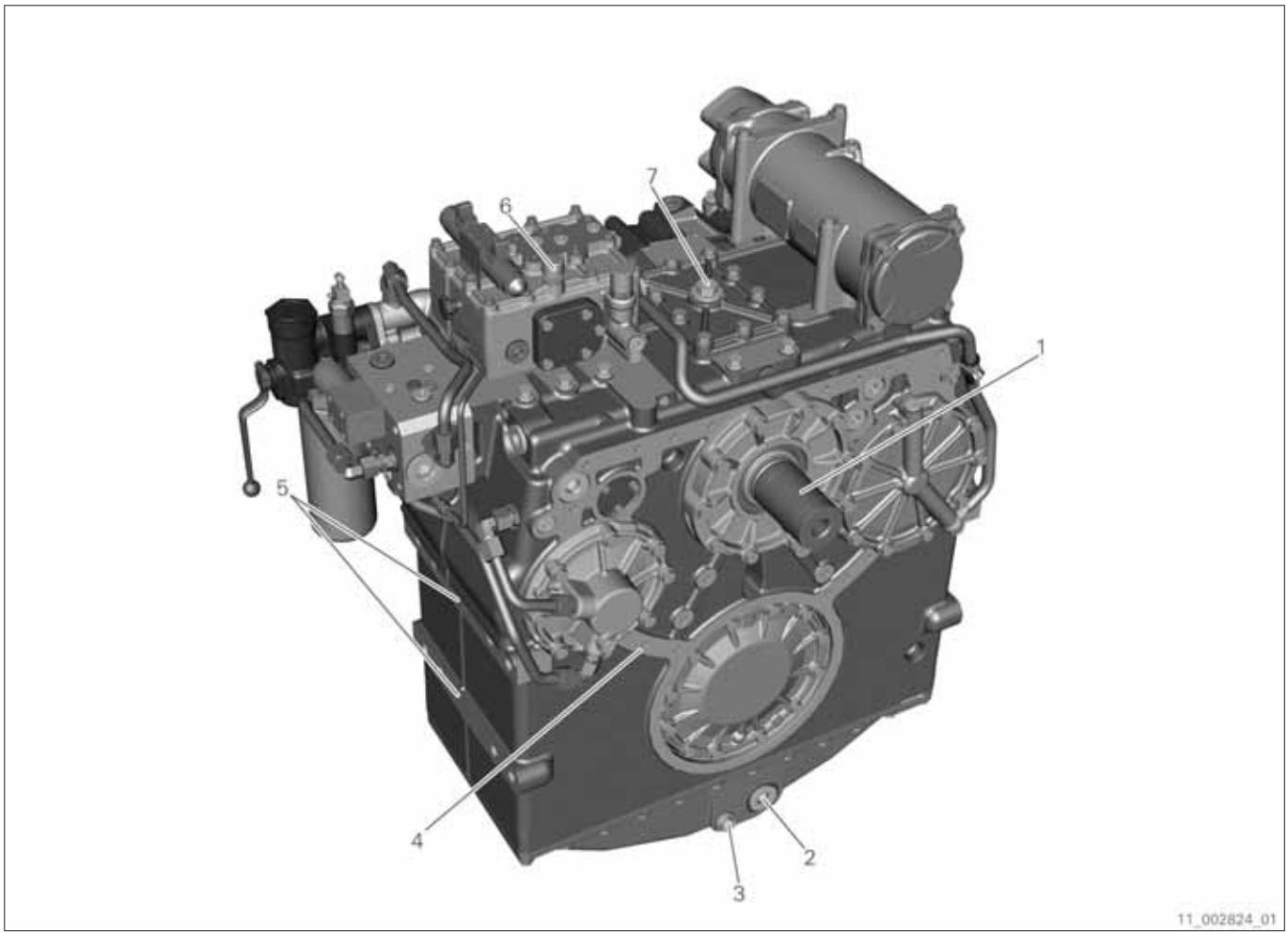

Fig. 28

1 Input (8)
2 Suction connection facility for pump unit (19)
3 Oil drain (20)
4 Mounting flange face for bell (28)
5 Transmission mounting surface (1)
6 Transmission bleeding (23)
7 Oil filler hole (46)

3.2.12 ZF W3310, ZF W3350, ZF W3355, ZF W3310 NR, ZF W3350 NR, ZF W3355 NR

The digits in brackets refer to the marked positions in the installation drawing.

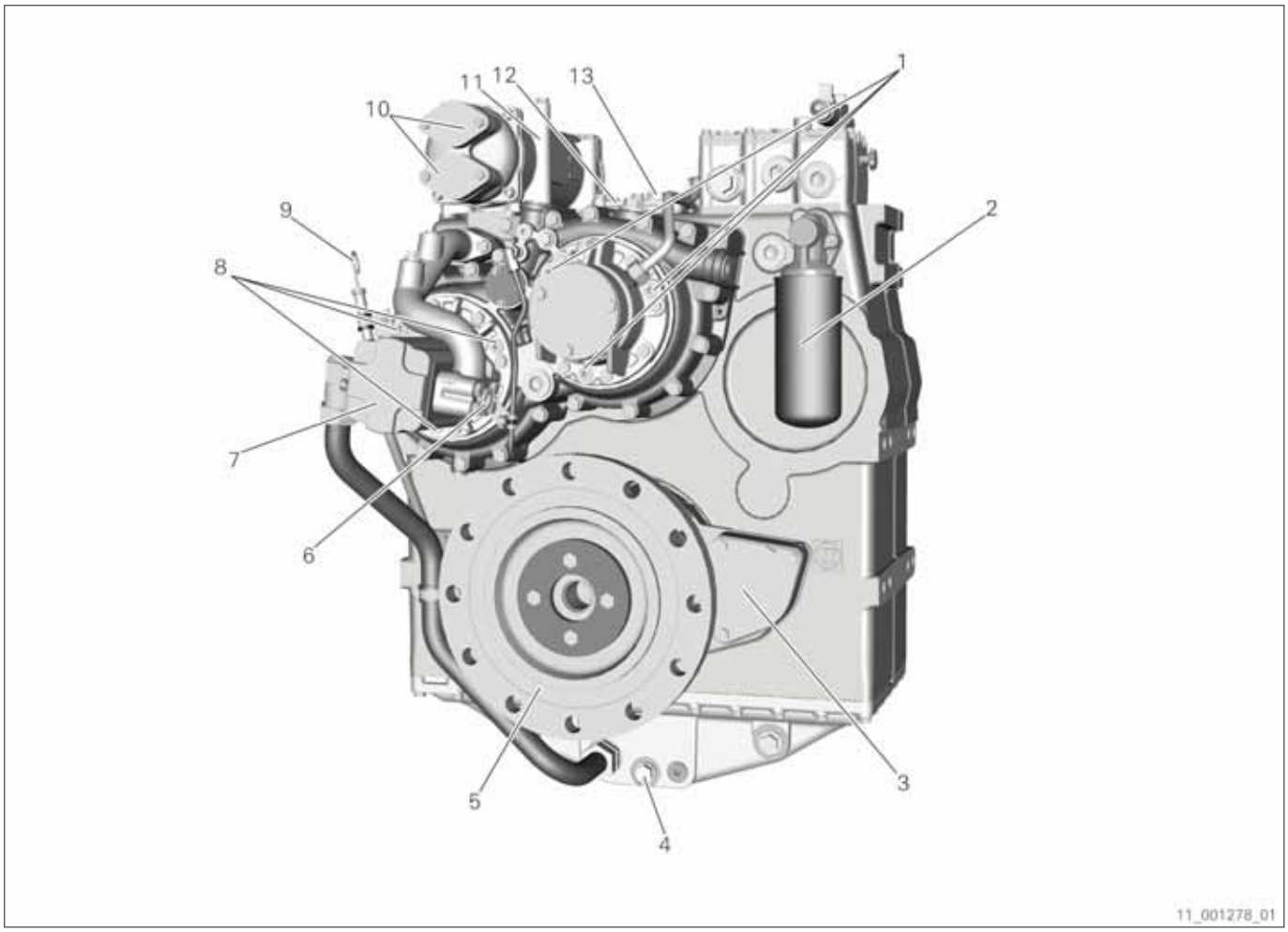

Fig. 29

1 Clamping screws belonging to the counter-rotation emergency control (34)
3 Position for trailing pump (18)
5 Output (26)
7 Engine-dependent oil pump (10)
9 Oil dipstick (25)
11 Transmission oil cooler (15)
13 Oil filler hole (46)
2 Oil filter (33)
4 Oil drain (20)
6 Pressure connection facility for pump unit (16)
8 Clamping screws belonging to the enginewise rotation emergency control (44)
10 Water supply flange (13)
12 Inspection cover (47)

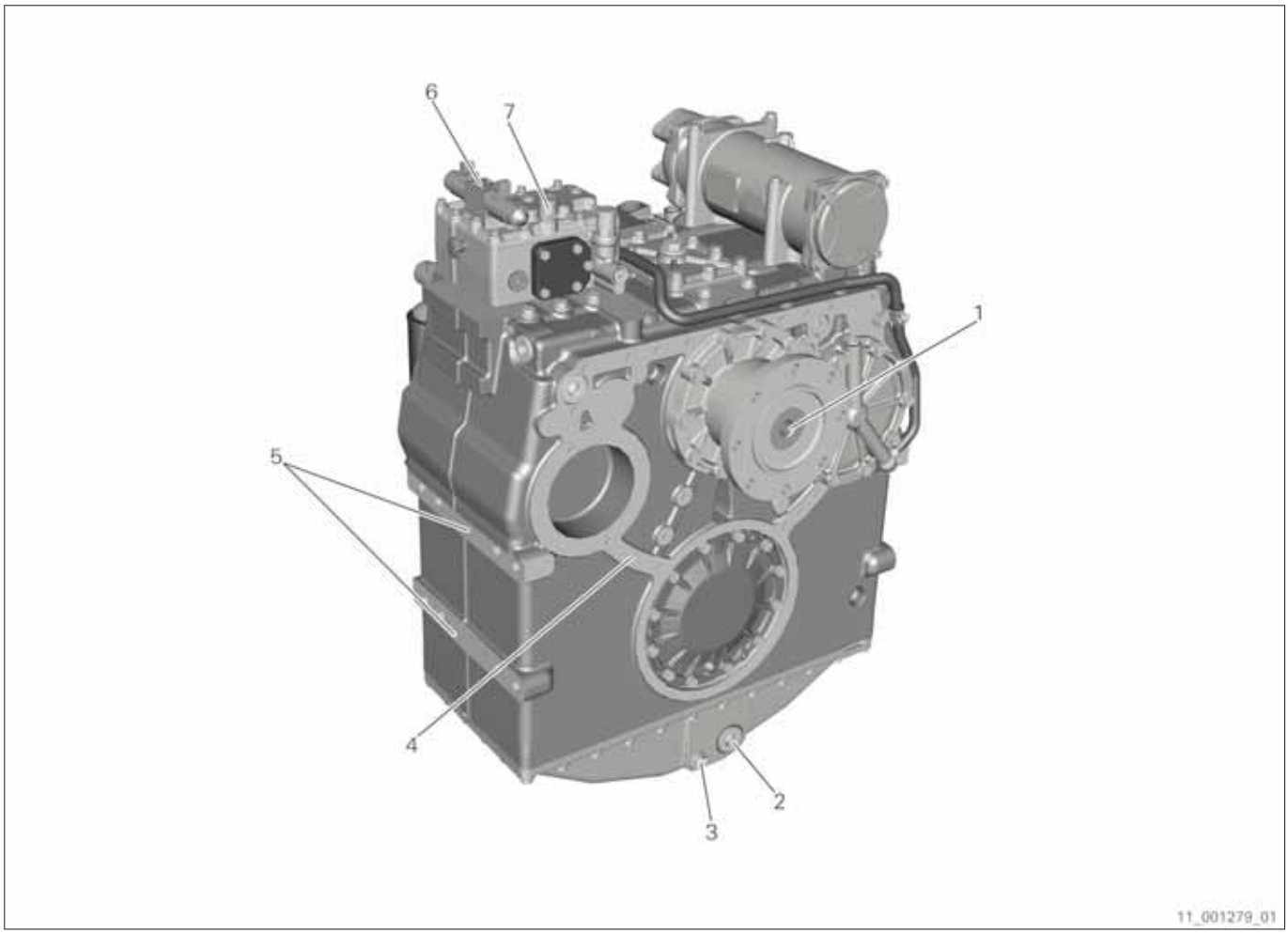

Fig. 30

1 Input (8)
2 Suction connection facility for pump unit (19)
3 Oil drain (20)
4 Mounting flange face for bell (28)
5 Transmission mounting surface (1)
6 Electric actuation unit (101)
7 Transmission bleeding (23)

3.2.13 ZF W3310 NC (Counter-rotation), ZF 3350 NC (Counter-rotation), ZF 3355 NC (Counter-rotation)

The digits in brackets refer to the marked positions in the installation drawing.

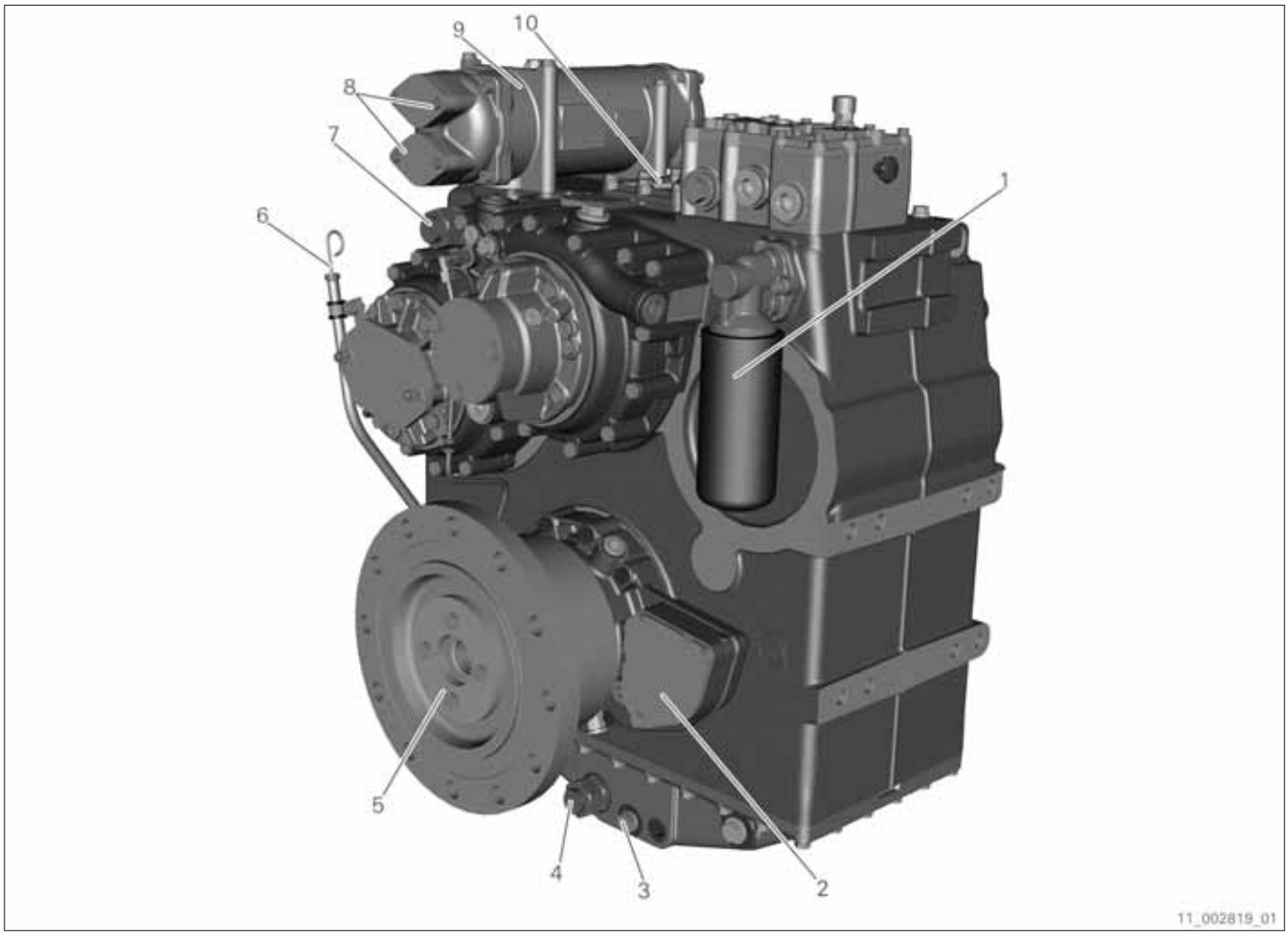

Fig. 31

1 Oil filter (33)
2 Position for trailing pump (18)
3 Oil drain (20)
4 Suction connection facility for pump unit (19)
5 Output (26)
6 Oil dipstick (25)
7 Pressure connection facility for pump unit (16)
8 Water supply flange (13)
9 Transmission oil cooler (15)
10 Inspection cover (47)

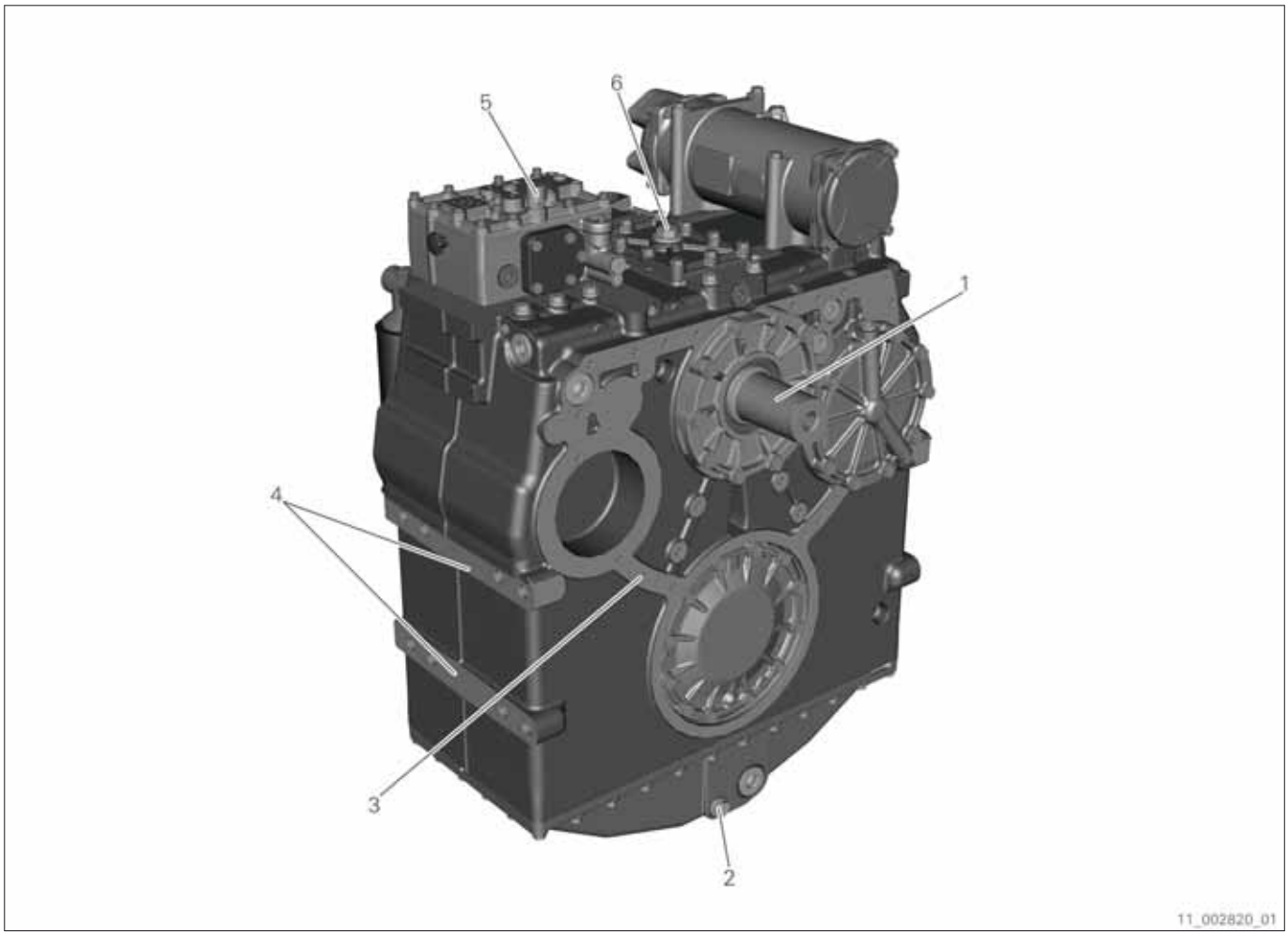

Fig. 32

1 Input (8)
2 Oil drain (20)
3 Mounting flange face for bell (28)
4 Transmission mounting surface (1)
5 Transmission bleeding (23)
6 Oil filler hole (46)

3.2.14 ZF W3310, ZF W3350, ZF W3355,ZF W3310 NR, ZF W3350 NR, ZF W3355 NR with power take-in

The digits in brackets refer to the marked positions in the installation drawing.

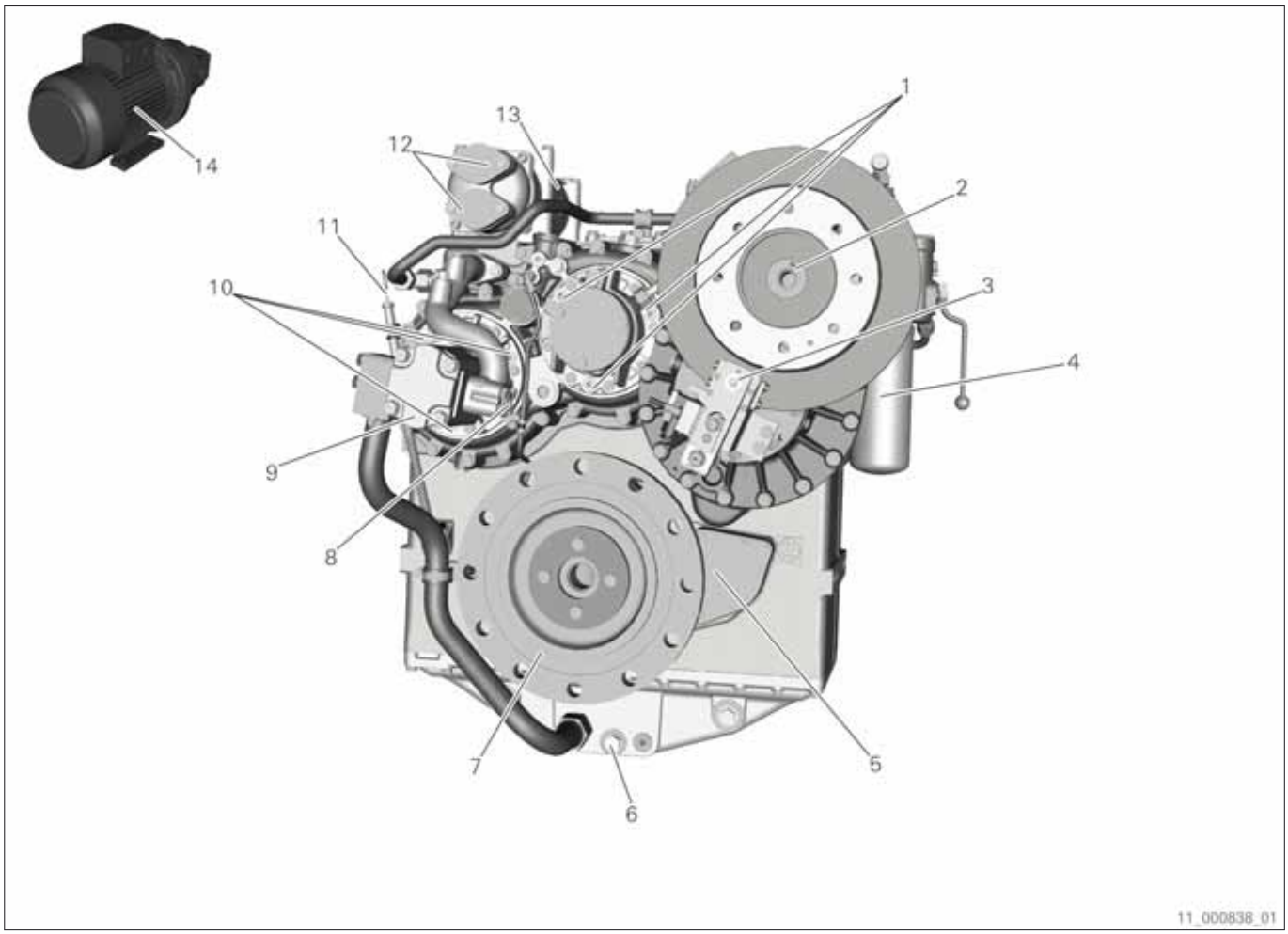

Fig. 33

1 Clamping screws belonging to the counter-rotation emergency control (34)
2 Input shaft for power take-in (150)
3 Brake for power take-in (252)
4 Oil filter (33)
5 Position for trailing pump (18)
6 Oil drain (20)
7 Output (26)
8 Pressure connection facility for pump unit (16)
9 Engine-dependent oil pump (10)
10 Clamping screws belonging to the enginewise rotation emergency control (44)
11 Oil dipstick (25)
12 Water supply flange (13)
13 Transmission oil cooler (15)
14 Oil pump for power take-in (208)

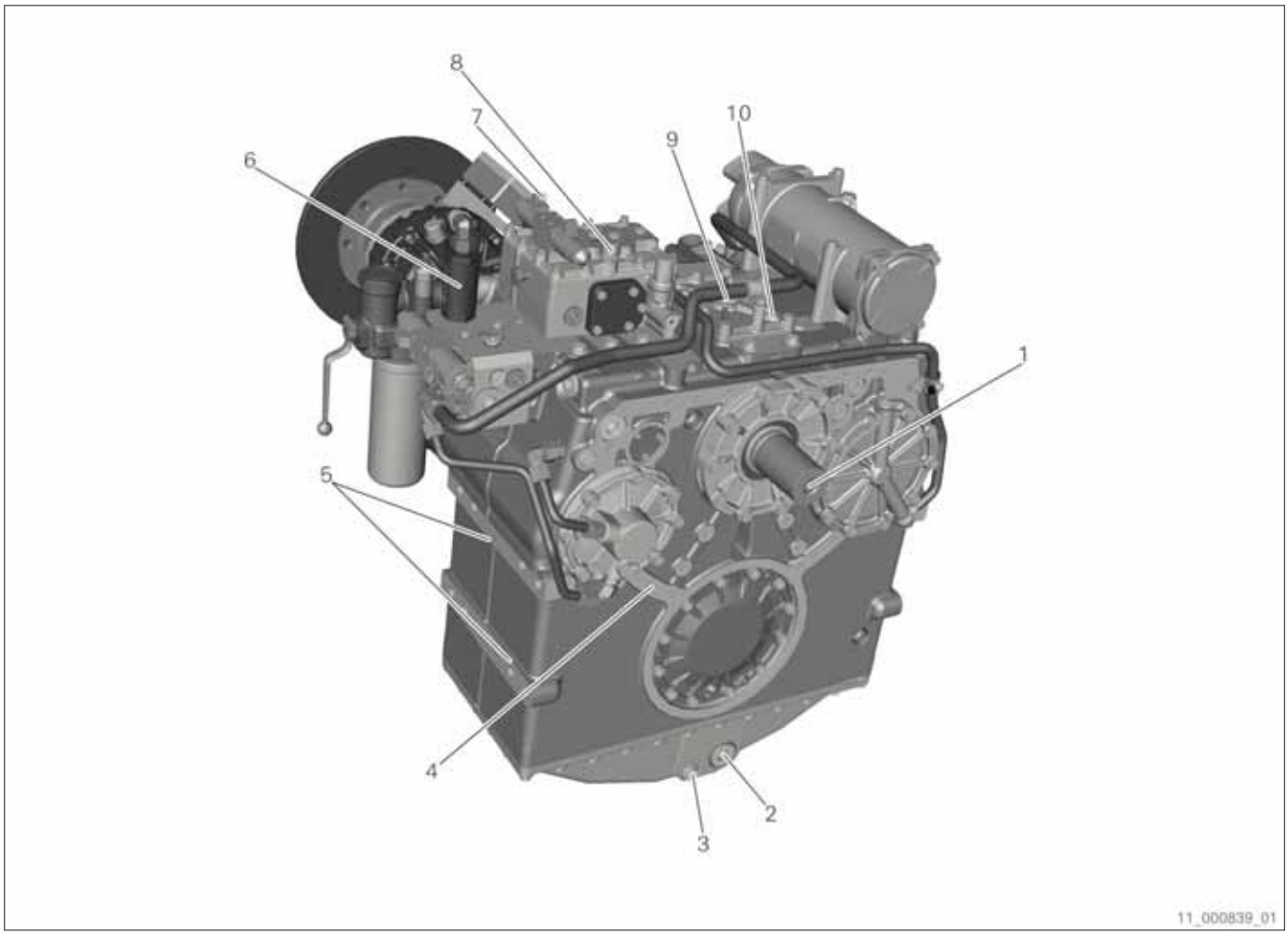

Fig. 34

1 Input (8)
2 Suction connection facility for pump unit (19)
3 Oil drain (20)
4 Mounting flange face for bell (28)
5 Transmission mounting surface (1)
6 Oil filter for power take-in
7 Electric actuation unit (101)
8 Transmission bleeding (23)
9 Oil filler hole (46)
10 Inspection cover (47)

3.2.15 ZF W3310, ZF W3350, ZF W3355, ZF W3310 NR, ZF W3350 NR, ZF W3355 NR with shaft brake

The digits in brackets refer to the marked positions in the installation drawing.

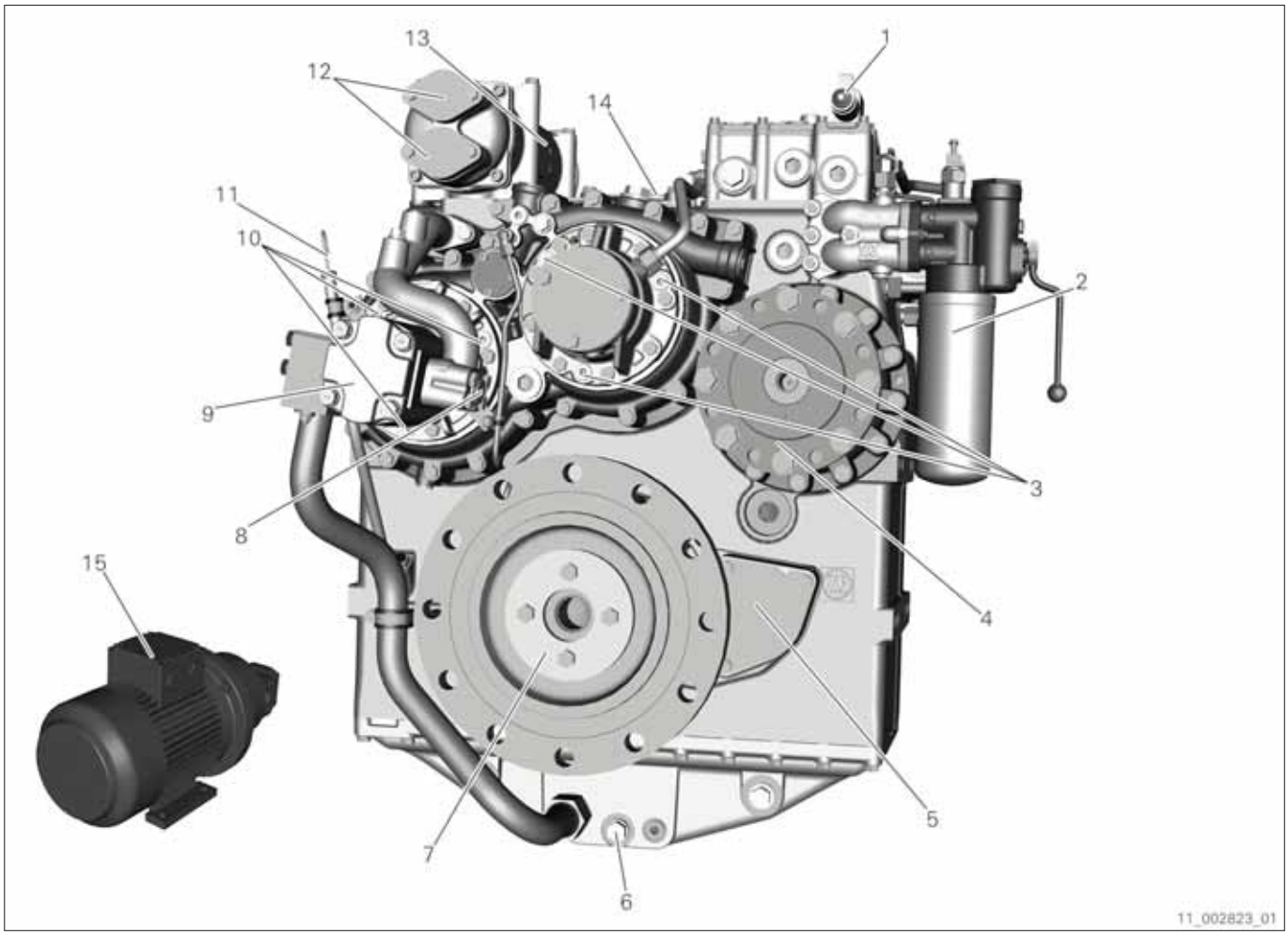

Fig. 35

1 Electric actuation unit (101)
3 Clamping screws belonging to the counter-rotation emergency control (34)
5 Position for trailing pump (18)
7 Output (26)
9 Engine-dependent oil pump (10)
11 Oil dipstick (25)
13 Transmission oil cooler (15)
15 Oil pump for shaft brake (208)
2 Oil filter (33)
4 Shaft brake (252)
6 Oil drain (20)
8 Pressure connection facility for pump unit (16)
10 Clamping screws belonging to the enginewise rotation emergency control (44)
12 Water supply flange (13)
14 Inspection cover (47)

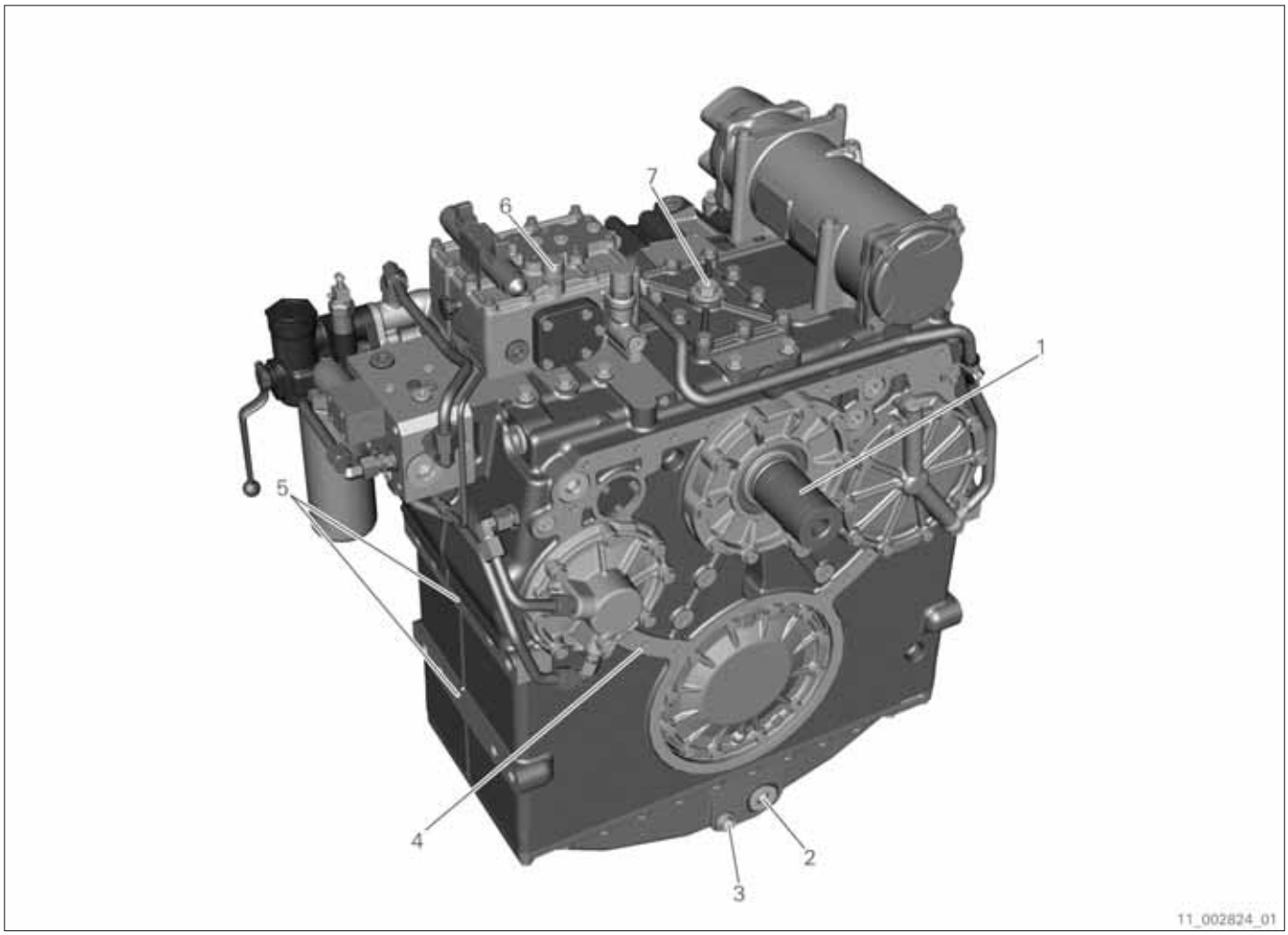

Fig. 36

1 Input (8)
2 Suction connection facility for pump unit (19)
3 Oil drain (20)
4 Mounting flange face for bell (28)
5 Transmission mounting surface (1)
6 Transmission bleeding (23)
7 Oil filler hole (46)

3.2.16 ZF 3711, ZF 3751, ZF 3756, ZF 3761, ZF W3710, ZF W3750, ZF W3755, ZF 3711 NR, ZF 3751 NR, ZF 3756 NR, ZF 3761 NR, ZF W3710 NR, ZF W3750 NR, ZF W3755 NR

The digits in brackets refer to the marked positions in the installation drawing.

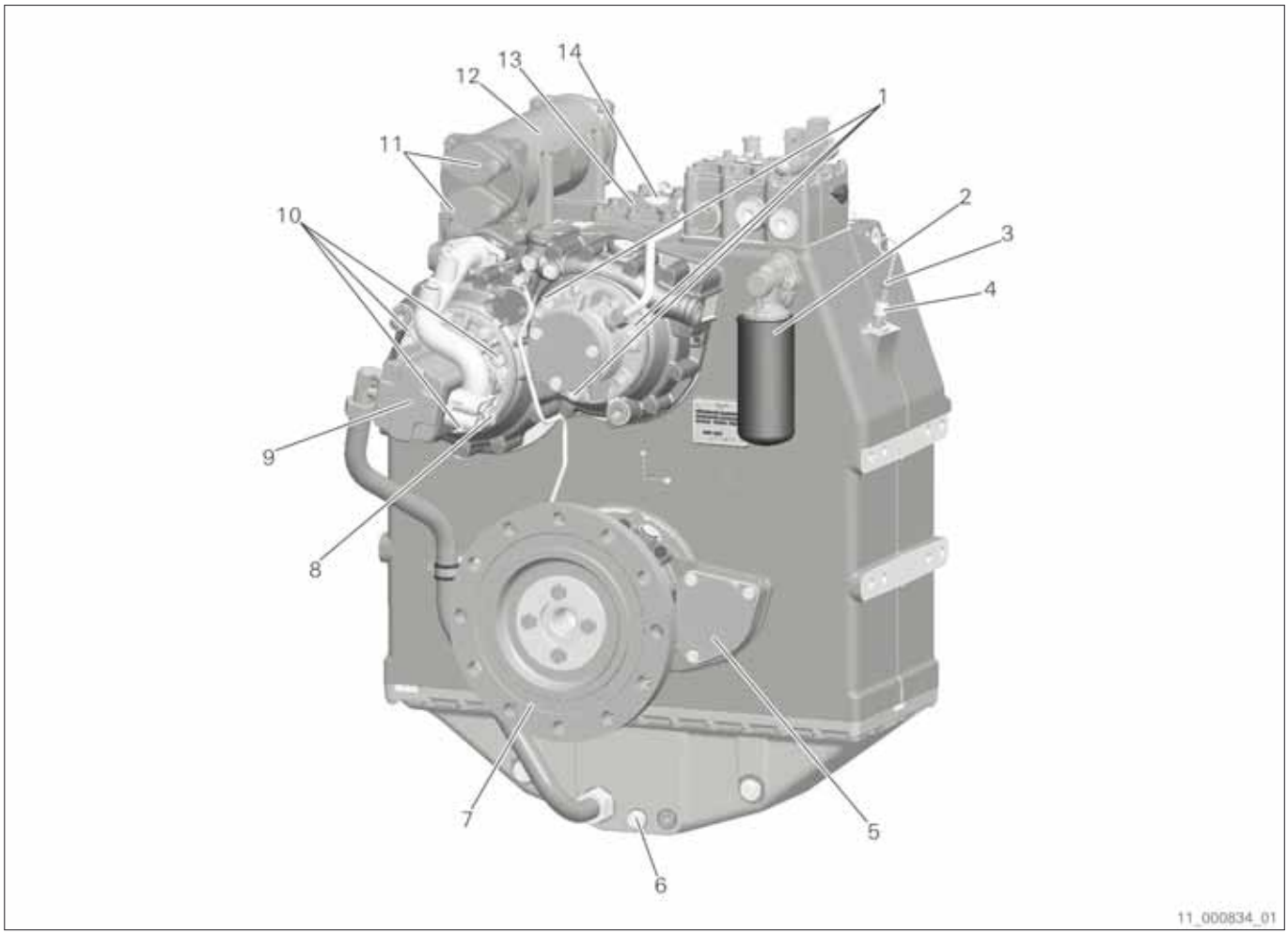

Fig. 37

1 Clamping screws belonging to the counter-rotation emergency control (34)
2 Oil filter (33)
3 Oil dipstick (25)
4 Transmission bleeding (23)
5 Position for trailing pump (18)
6 Oil drain (20)
7 Output (26)
8 Pressure connection facility for pump unit (16)
9 Engine-dependent oil pump (10)
10 Clamping screws belonging to the enginewise rotation emergency control (44)
11 Water supply flange (13)
12 Transmission oil cooler (15)
13 Inspection cover (47)
14 Oil filler hole (46)

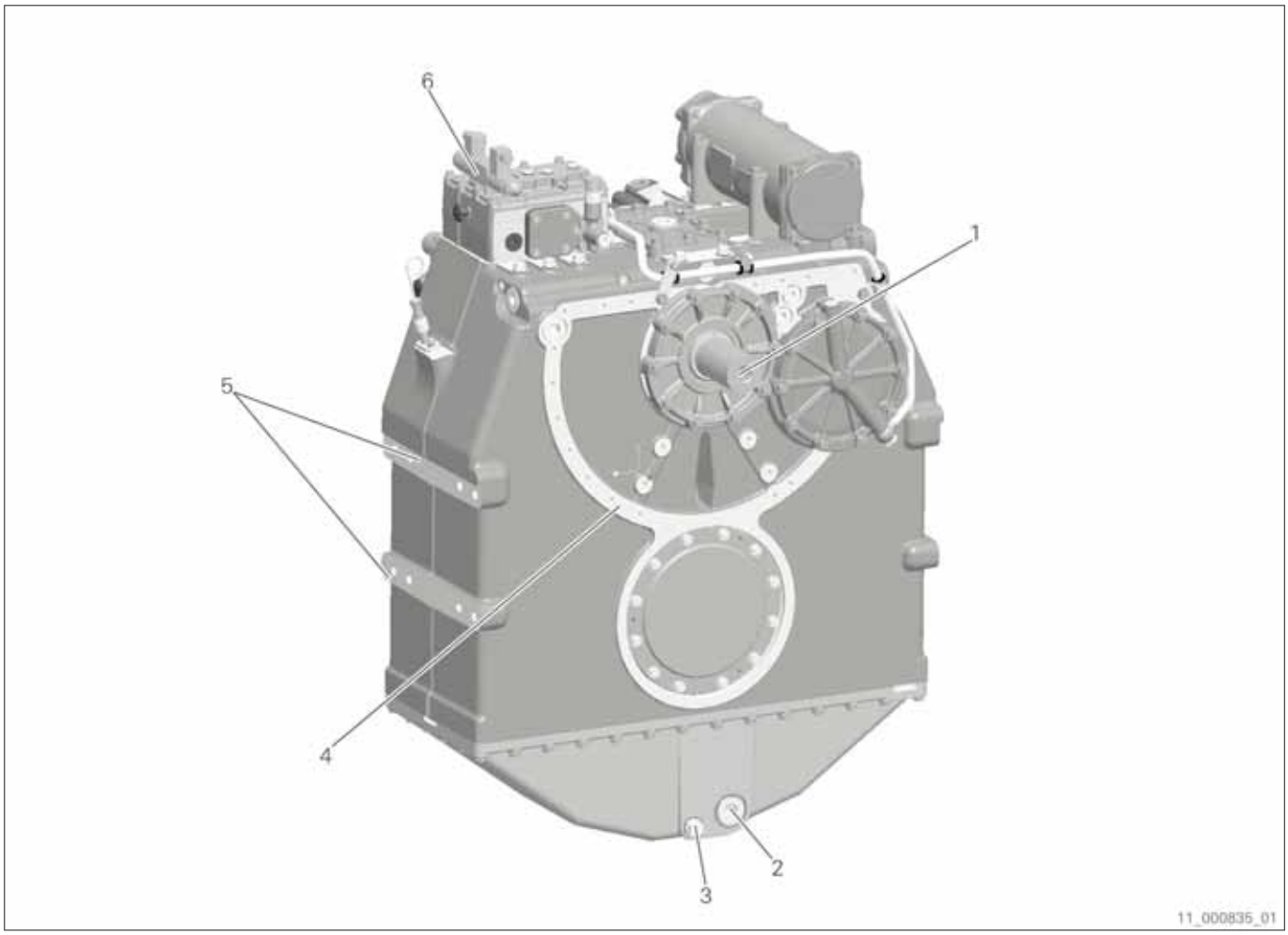

Fig. 38

1 Input (8)
2 Suction connection facility for pump unit (19)
3 Oil drain (20)
4 Mounting flange face for bell (28)
5 Transmission mounting surface (1)
6 Electric actuation unit (101)

3.3 Transmission diagram and power flow diagram

The transmission diagram and the power flow diagram illustrates the power transmission for the output rotation direction same or counter direction output rotation direction. The full extent of the engine power can be transmitted in both directions of rotation. The gear ratio specified on the type plate applies to both directions of rotation. Therefore, identical transmission designs can be used for multi-engine installations.

The use of identical transmission designs requires fewer spare parts and enables the use of uniform exchange units.

3.3.1 Parallel version

The three following figures schematically illustrate the parallel version as a reverse transmission and as a NR transmission. The view on the transmission diagram is towards the transmission output side.

3.3.1.1 Reverse transmission

The pinion that is not engaged is depicted as a dotted line.

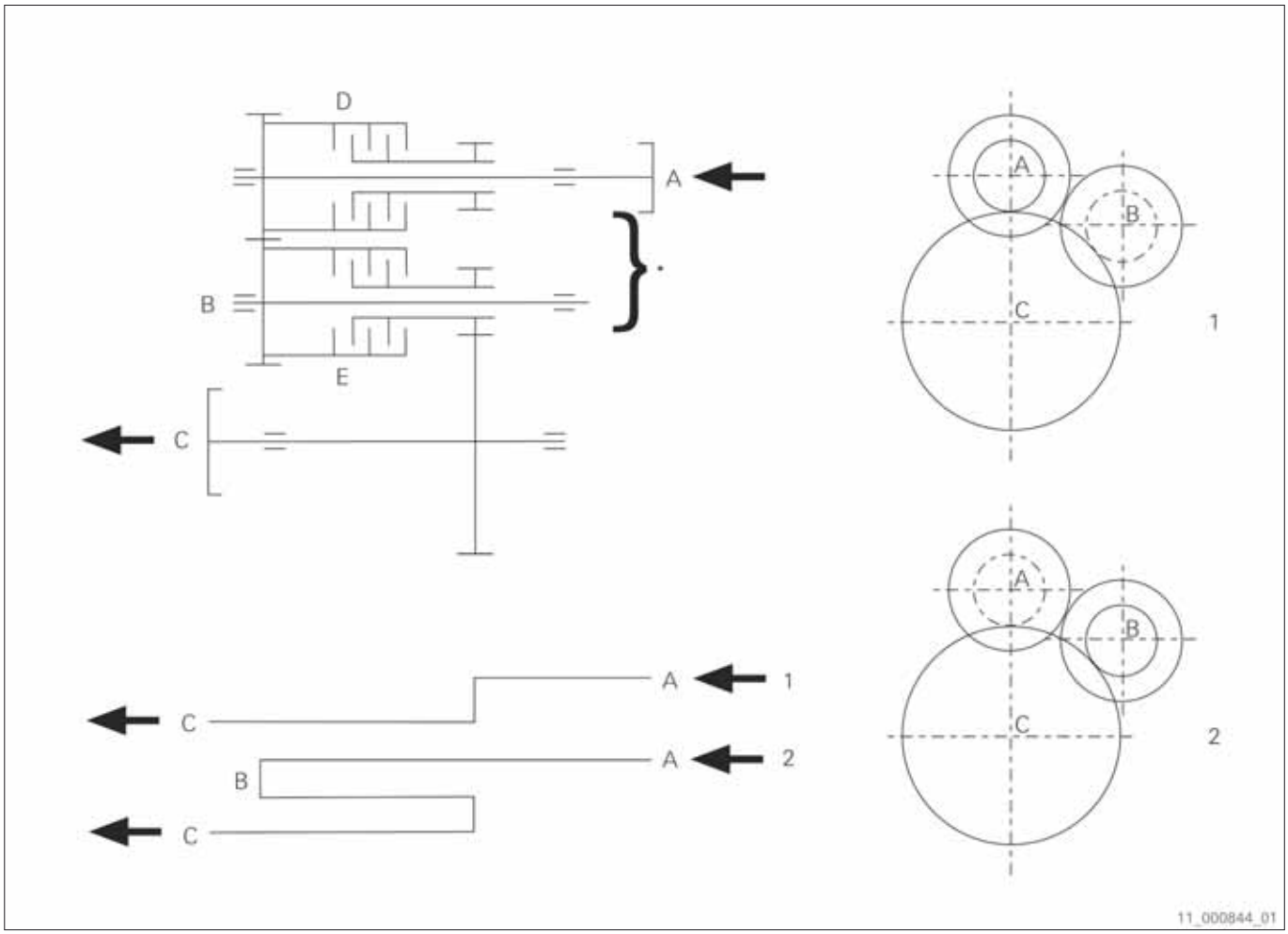

Fig. 39

A Input shaft
C Output shaft
E Clutch for enginewise rotation output rotation direction
2 Output rotation direction enginewise
B Intermediate shaft
D Clutch for counter-rotation output rotation direction
1 Output rotation direction counter-enginewise
* Gears are meshing

3.3.1.2 NR transmission, counter direction

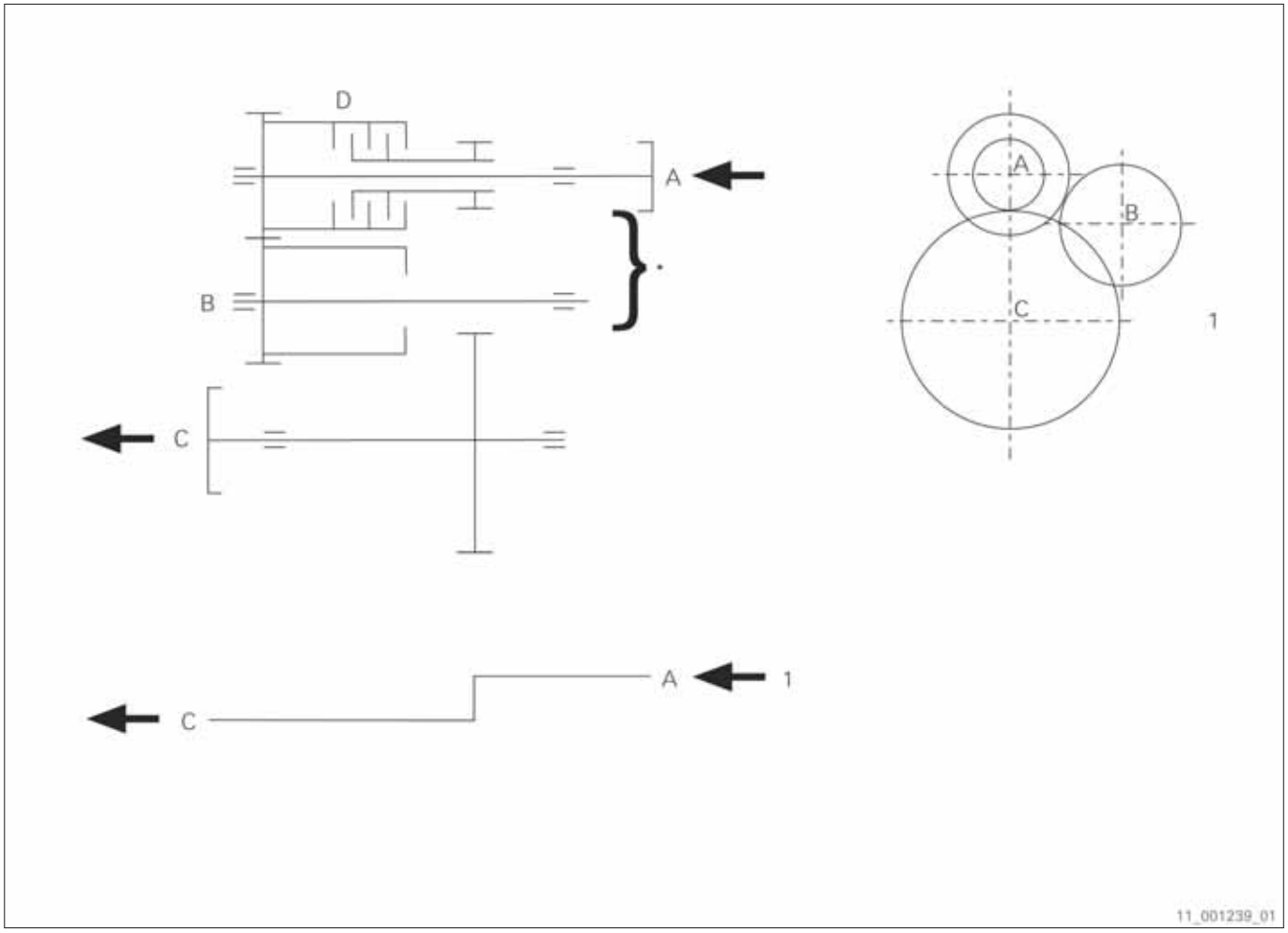

Fig. 40

A Input shaft
C Output shaft
1 Output rotation direction counter-enginewise
B Intermediate shaft
D Clutch for counter-rotation output rotation direction
* Gears are meshing

3.3.1.3 NR transmission, same direction

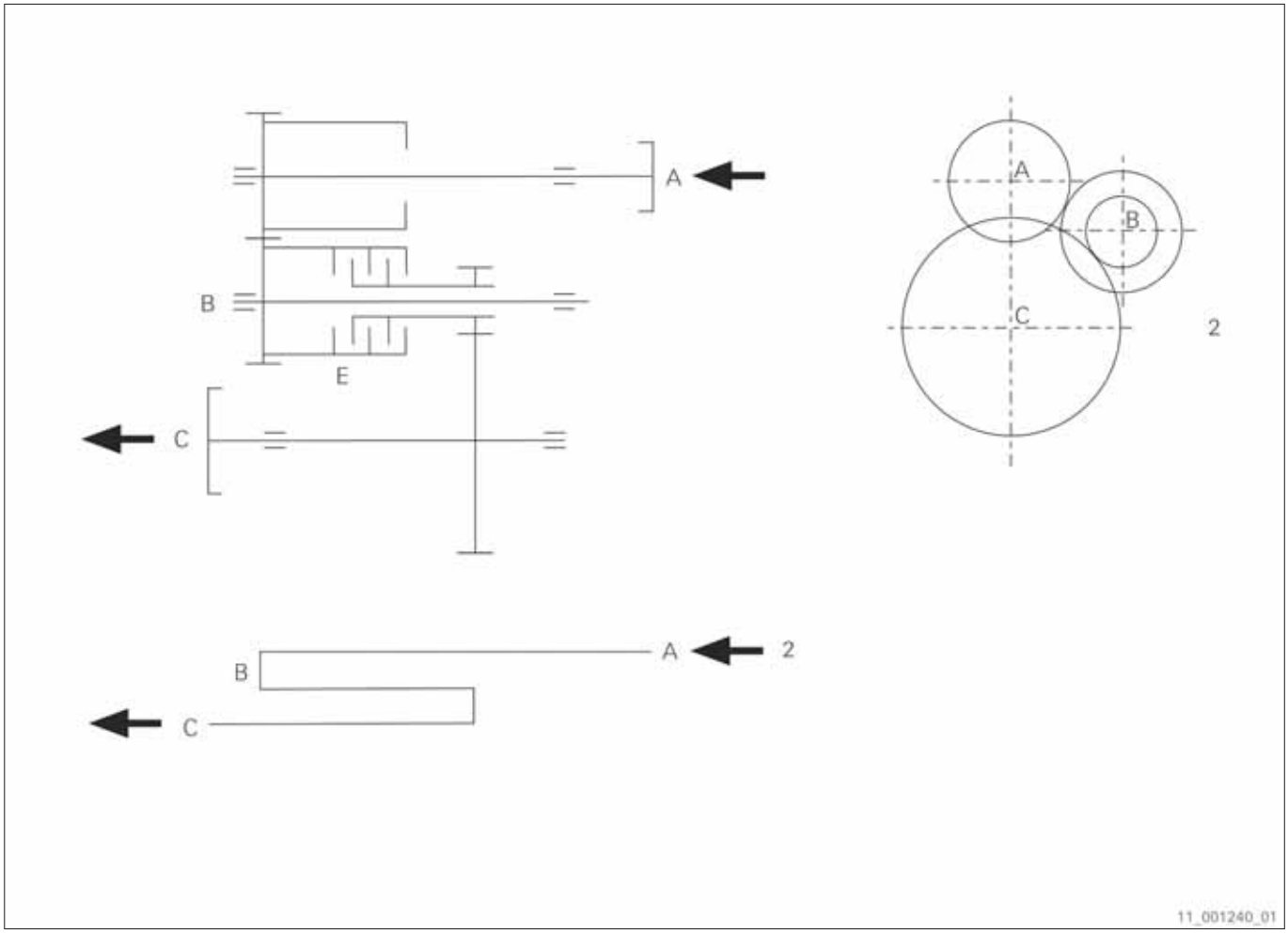

Fig. 41

A Input shaft
C Output shaft
2 Output rotation direction enginewise
B Intermediate shaft
E Clutch for enginewise rotation output rotation direction

3.3.1.4 NC transmission, counter-rotation with pump

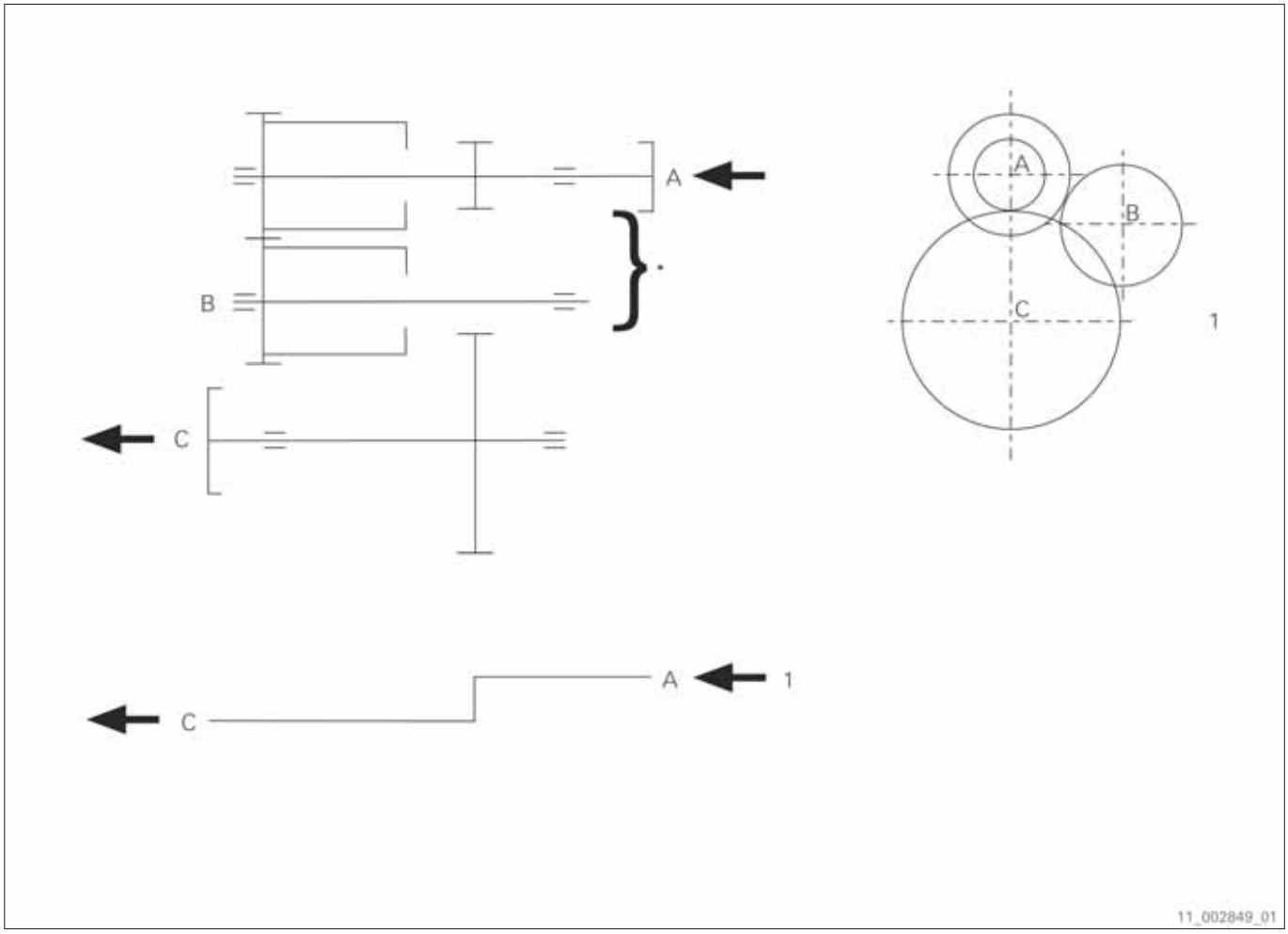

Fig. 42

A Input shaft
C Output shaft
* Gears are meshing
B Intermediate shaft
1 Output rotation direction counter-rotation

3.3.1.5 NC transmission, counter-rotation without pump

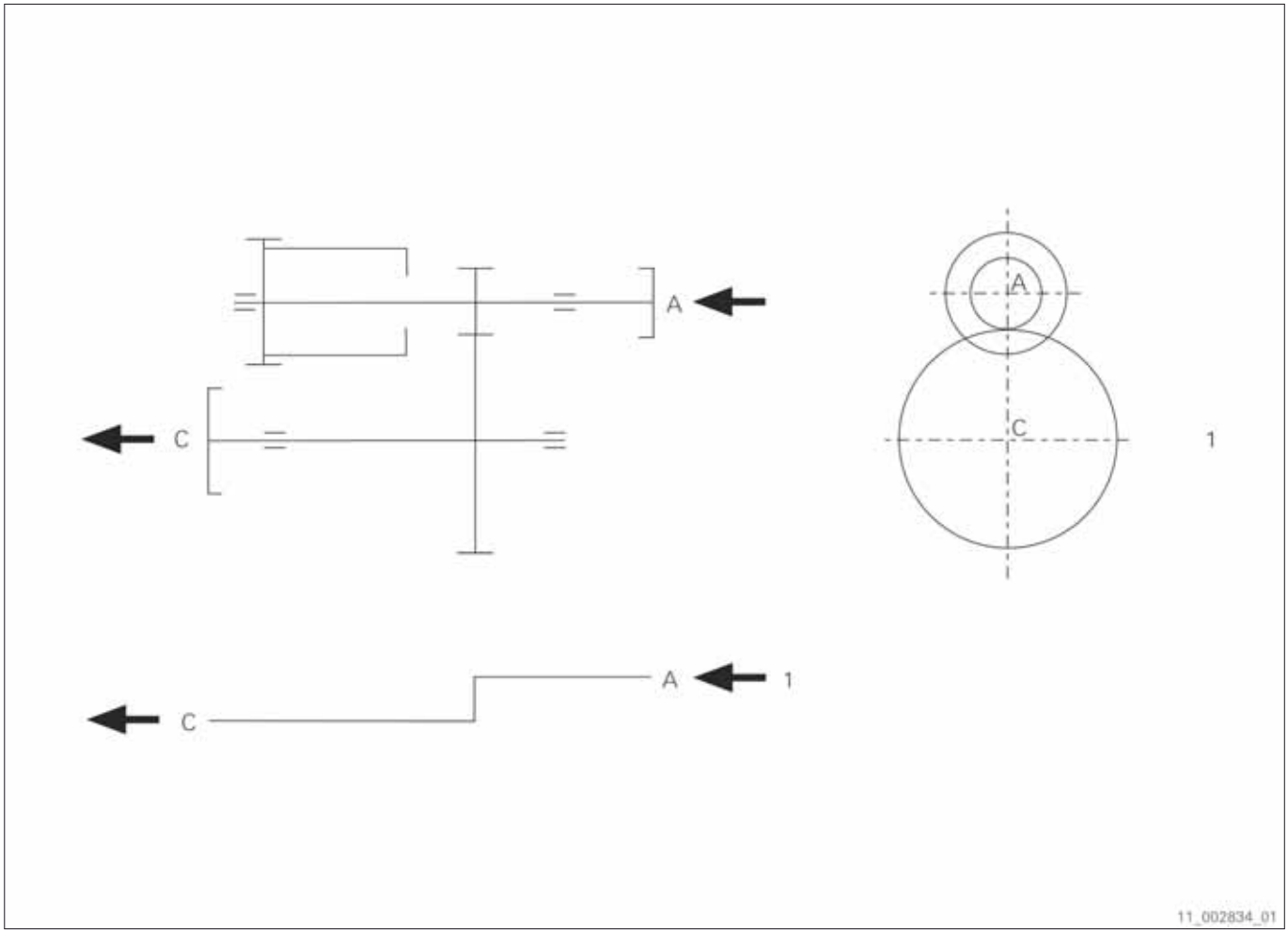

Fig. 43

A Input shaft
C Output shaft
1 Output rotation direction counter-rotation

3.3.1.6 NC transmissions, enginewise rotation

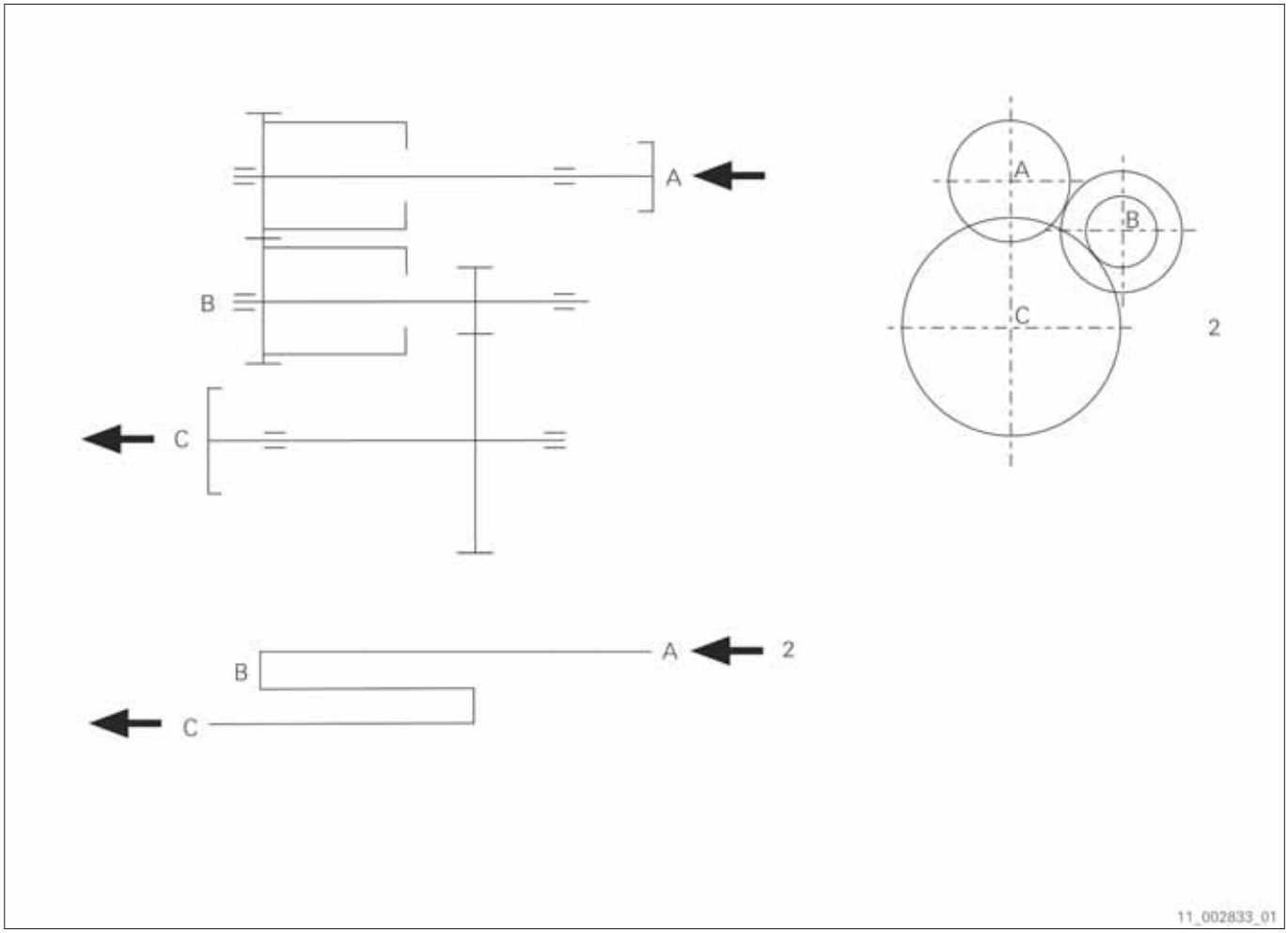

Fig. 44

A Input shaft
B Intermediate shaft
C Output shaft
2 Output rotation direction enginewise

3.3.2 A version

The three following figures schematically illustrate the A version as a reverse transmission and as a NR transmission. The view on the transmission diagram is towards the transmission output side.

3.3.2.1 Reverse transmission

The pinion that is not engaged is depicted as a dotted line.

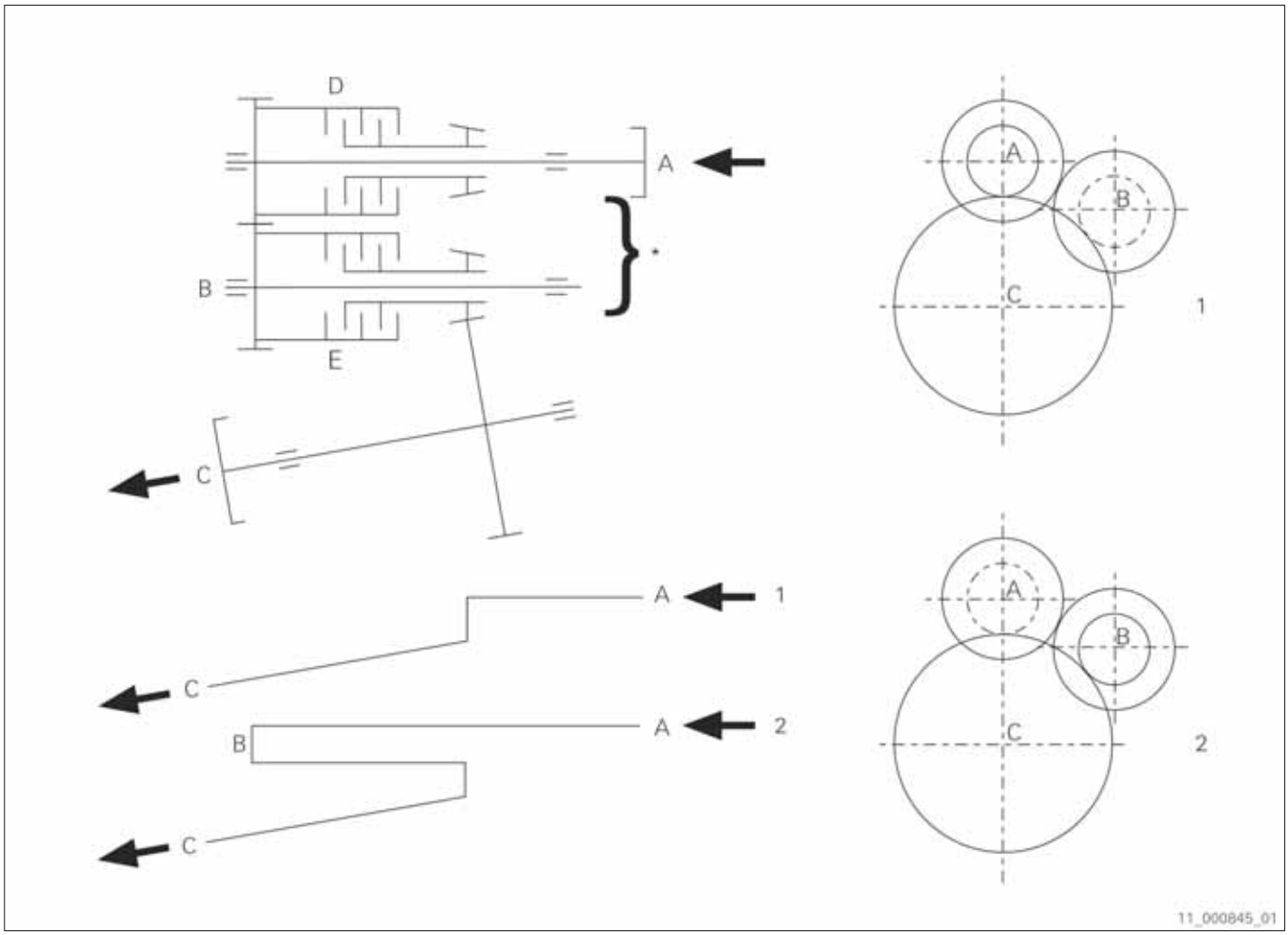

Fig. 45

A Input shaft
C Output shaft
E Clutch for enginewise rotation output rotation direction
2 Output rotation direction enginewise
B Intermediate shaft
D Clutch for counter-rotation output rotation direction
1 Output rotation direction counter-enginewise
* Gears are meshing

3.3.2.2 NR transmission, counter direction

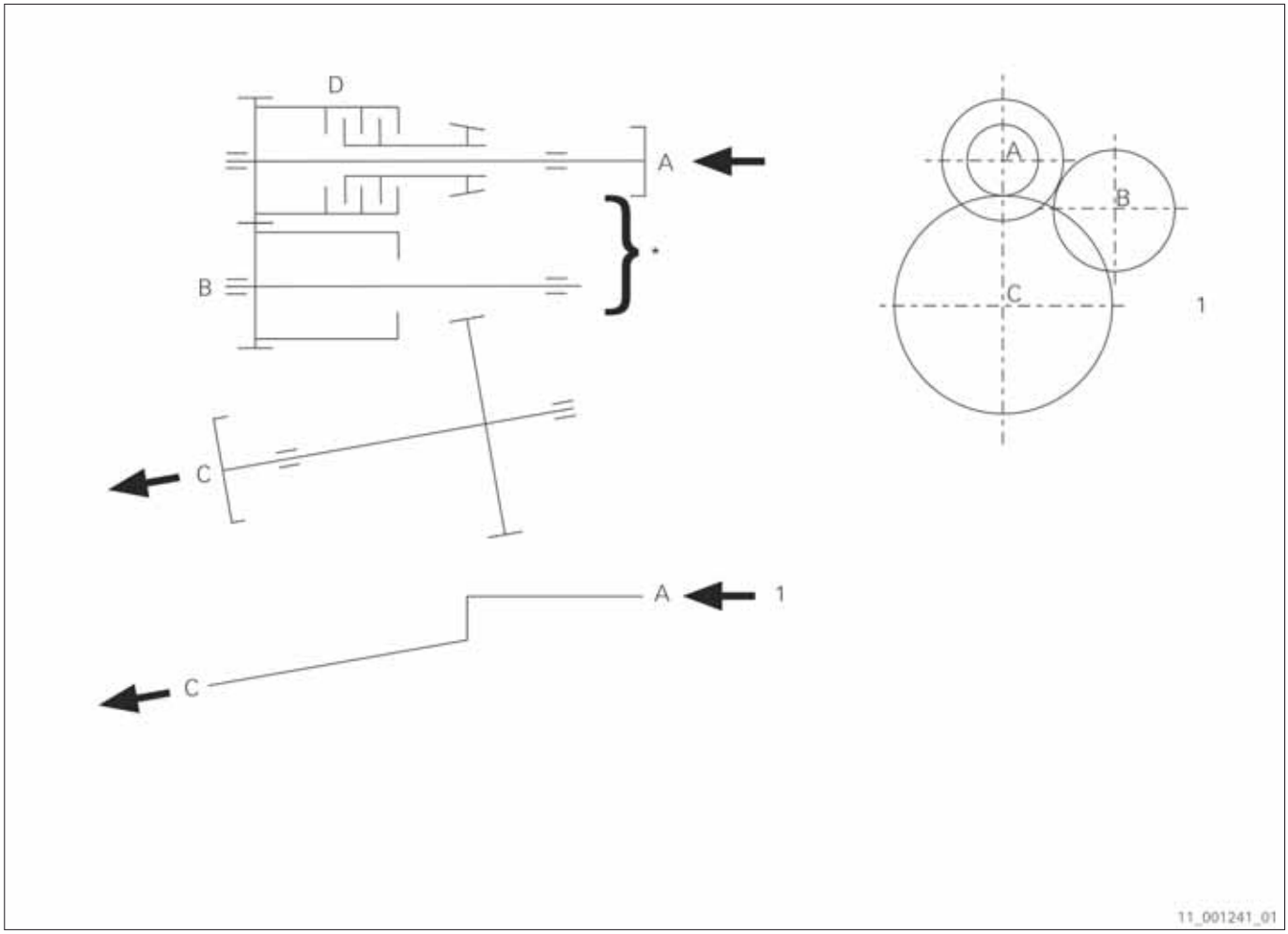

Fig. 46

A Input shaft
C Output shaft
1 Output rotation direction counter-enginewise
B Intermediate shaft
D Clutch for counter-rotation output rotation direction
* Gears are meshing

3.3.2.3 NR transmission, same direction

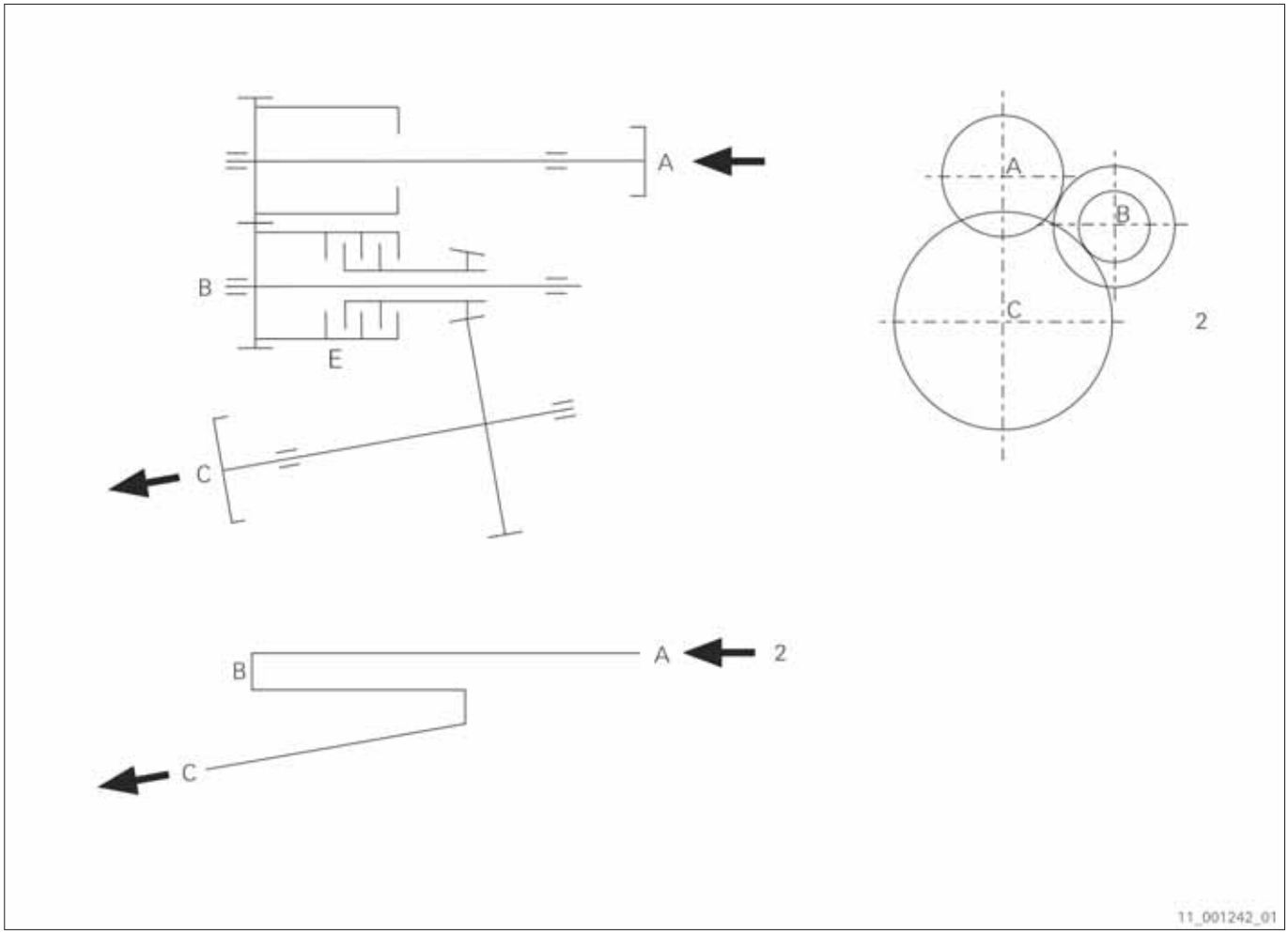

Fig. 47

A Input shaft
C Output shaft
2 Output rotation direction enginewise
B Intermediate shaft
E Clutch for enginewise rotation output rotation direction

3.3.3 V version

The three following figures schematically illustrate the V version as a reverse transmission and as a NR transmission. The view on the transmission diagram is towards the transmission output side.

3.3.3.1 Reverse transmission

The pinion that is not engaged is depicted as a dotted line.

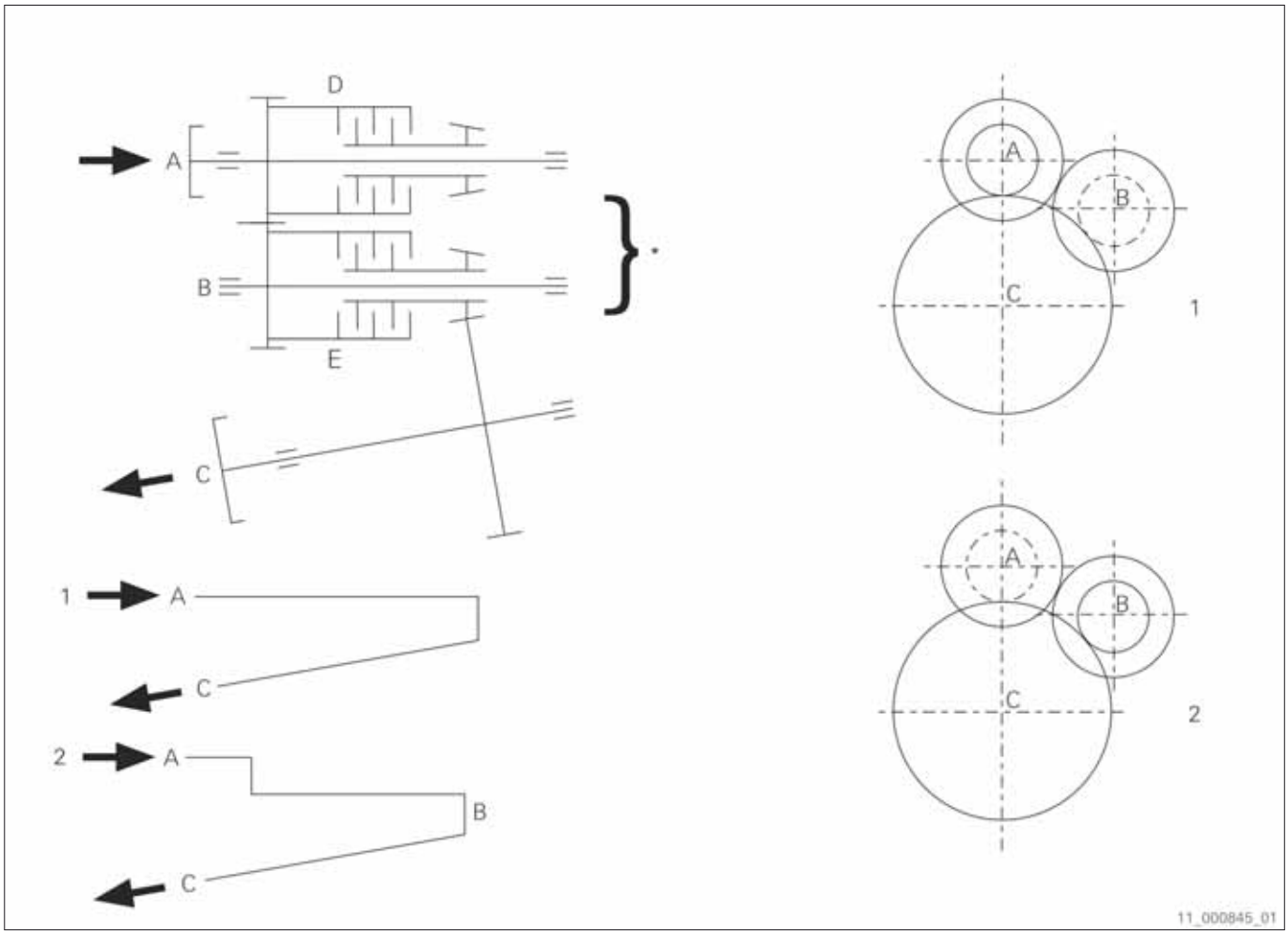

Fig. 48

A Input shaft
C Output shaft
E Clutch for enginewise rotation output rotation direction
2 Output rotation direction enginewise
B Intermediate shaft
D Clutch for counter-rotation output rotation direction
1 Output rotation direction counter-enginewise
* Gears are meshing

3.3.3.2 NR transmission, counter direction

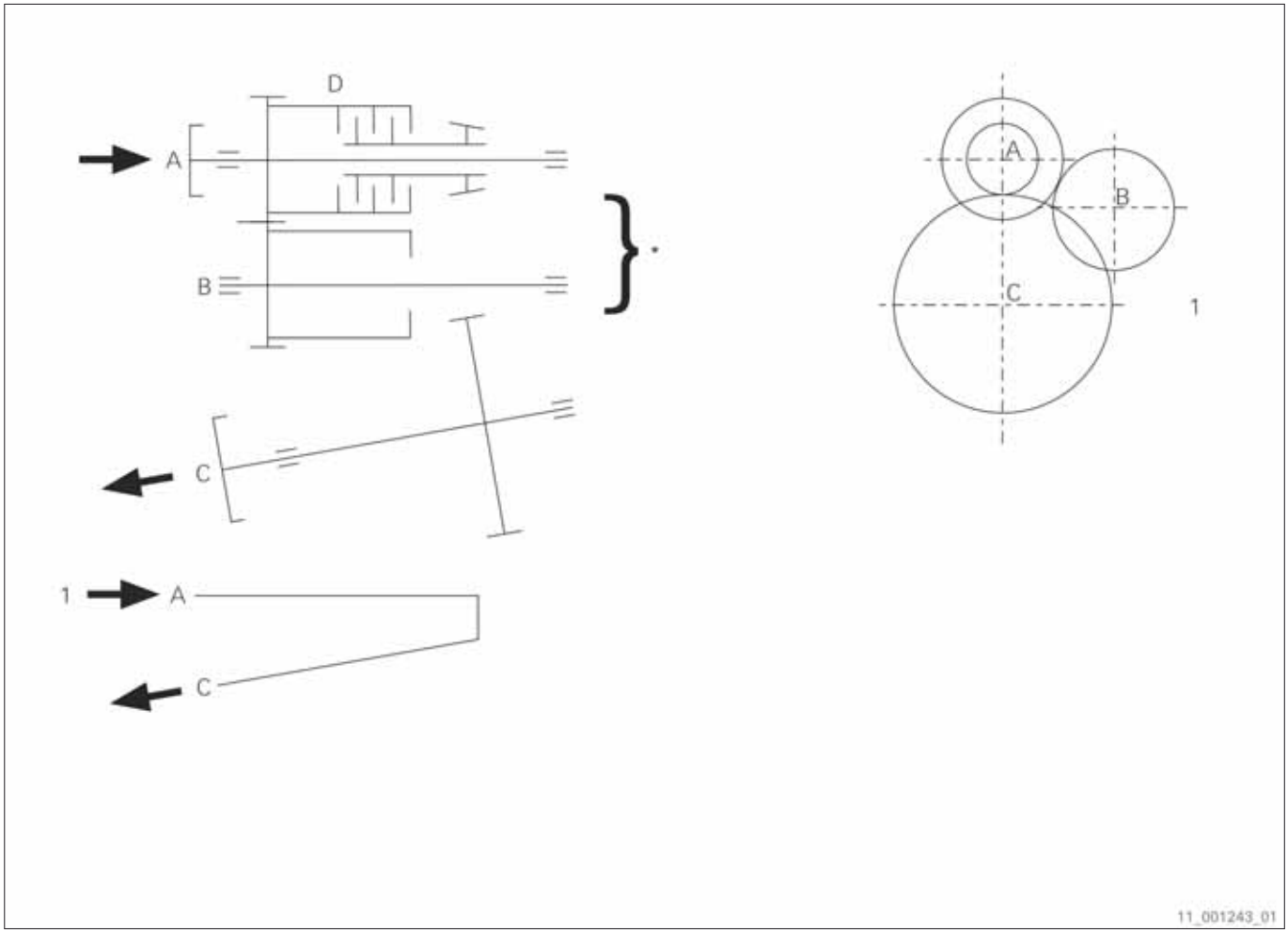

Fig. 49

A Input shaft
C Output shaft
1 Output rotation direction counter-enginewise
B Intermediate shaft
D Clutch for counter-rotation output rotation direction
* Gears are meshing

3.3.3.3 NR transmission, same direction

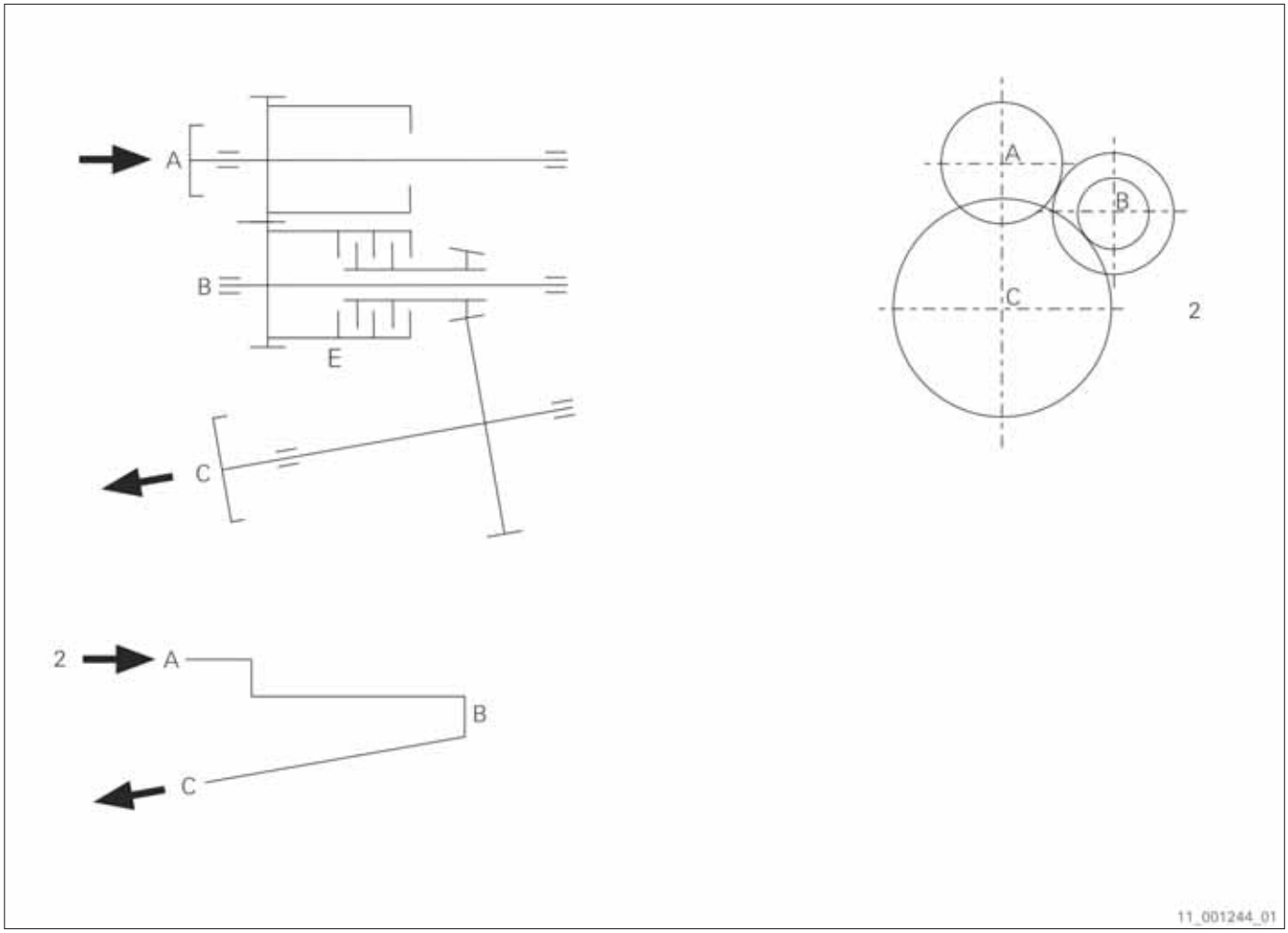

Fig. 50

A Input shaft
B Intermediate shaft
C Output shaft
E Clutch for enginewise rotation output rotation direction
2 Output rotation direction enginewise

3.3.4 D version

The following figure schematically illustrates the D version as a reverse transmission. The view on the transmission diagram is towards the transmission output side.

3.3.4.1 Reverse transmission

The pinion that is not engaged is depicted as a dotted line.

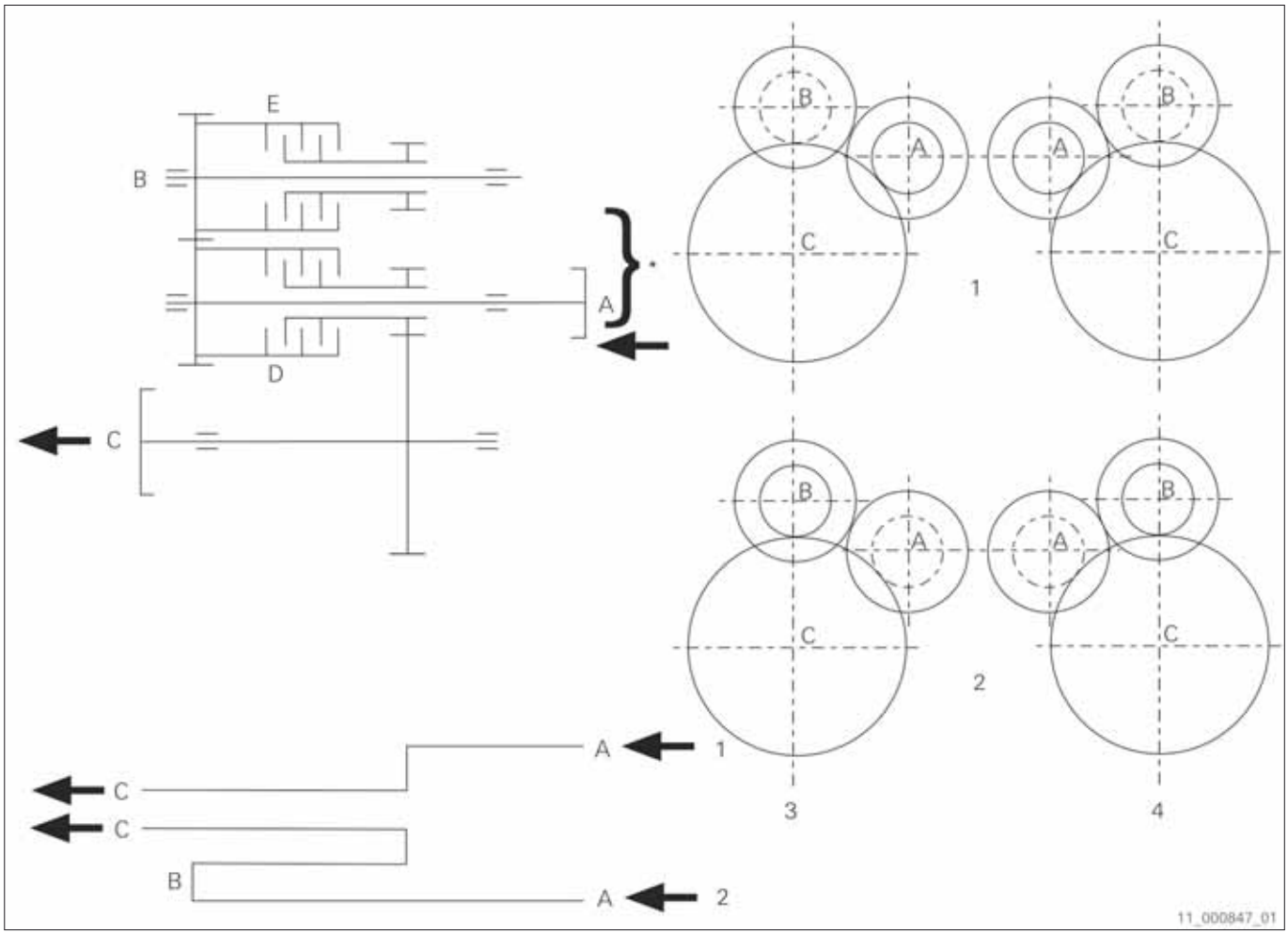

Fig. 51

A Input shaft
C Output shaft
E Clutch for enginewise rotation output rotation direction
2 Output rotation direction enginewise
4 DR version
B Intermediate shaft
D Clutch for counter-rotation output rotation direction
1 Output rotation direction counter-enginewise
3 DL version
* Gears are meshing

3.3.5 Power take-in

3.3.5.1 Operation with main drive

The three following figures schematically illustrate the power take-in in the reverse transmission and in the NR transmission. The view on the transmission diagram is towards the transmission output side.

3.3.5.1.1 Reverse transmission

The pinion that is not engaged is depicted as a dotted line.

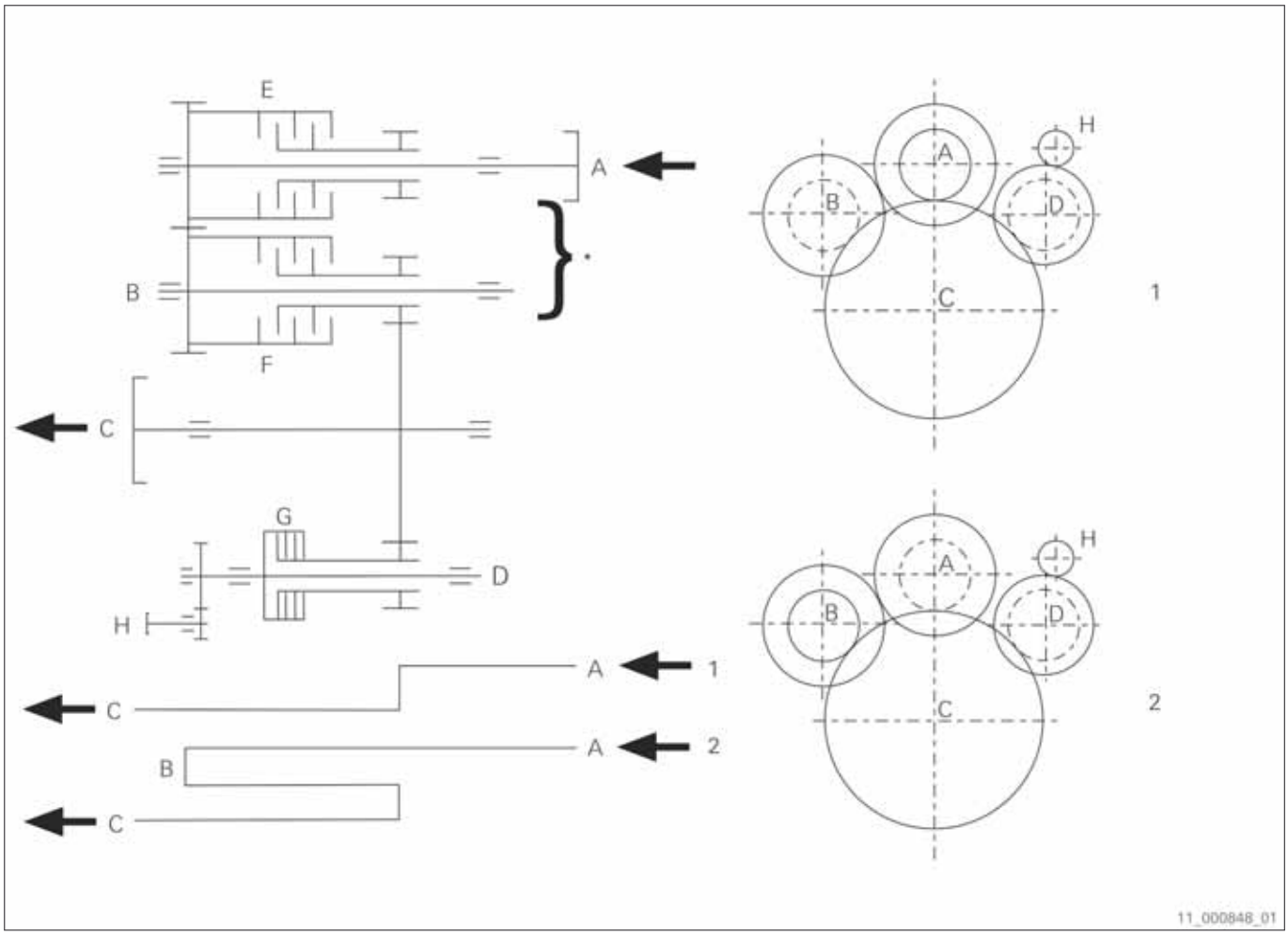

Fig. 52

A Input shaft
C Output shaft
E Clutch for counter-rotation output rotation direction
G Power take-in clutch
1 Output rotation direction counter-enginewise
* Gears are meshing

B Intermediate shaft
D Power take-in output shaft
F Clutch for enginewise rotation output rotation direction
H Power take-in input shaft
2 Output rotation direction enginewise

3.3.5.1.2 NR transmission, counter direction

The pinion that is not engaged is depicted as a dotted line.

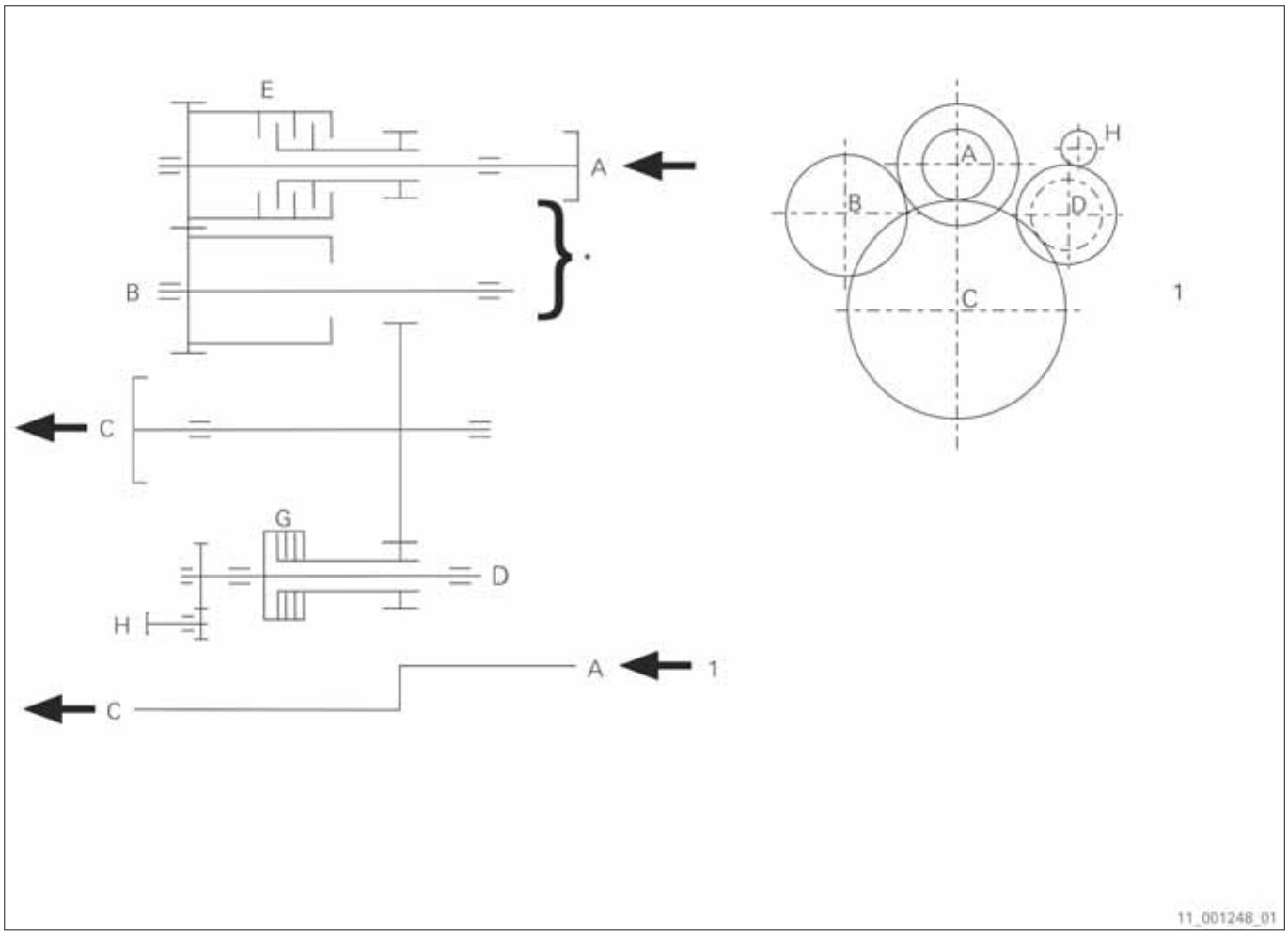

Fig. 53

A Input shaft
C Output shaft
E Clutch for counter-rotation output rotation direction
H Power take-in input shaft
* Gears are meshing
B Intermediate shaft
D Power take-in output shaft
G Power take-in clutch
1 Output rotation direction counter-enginewise

3.3.5.1.3 NR transmission, same direction

The pinion that is not engaged is depicted as a dotted line.

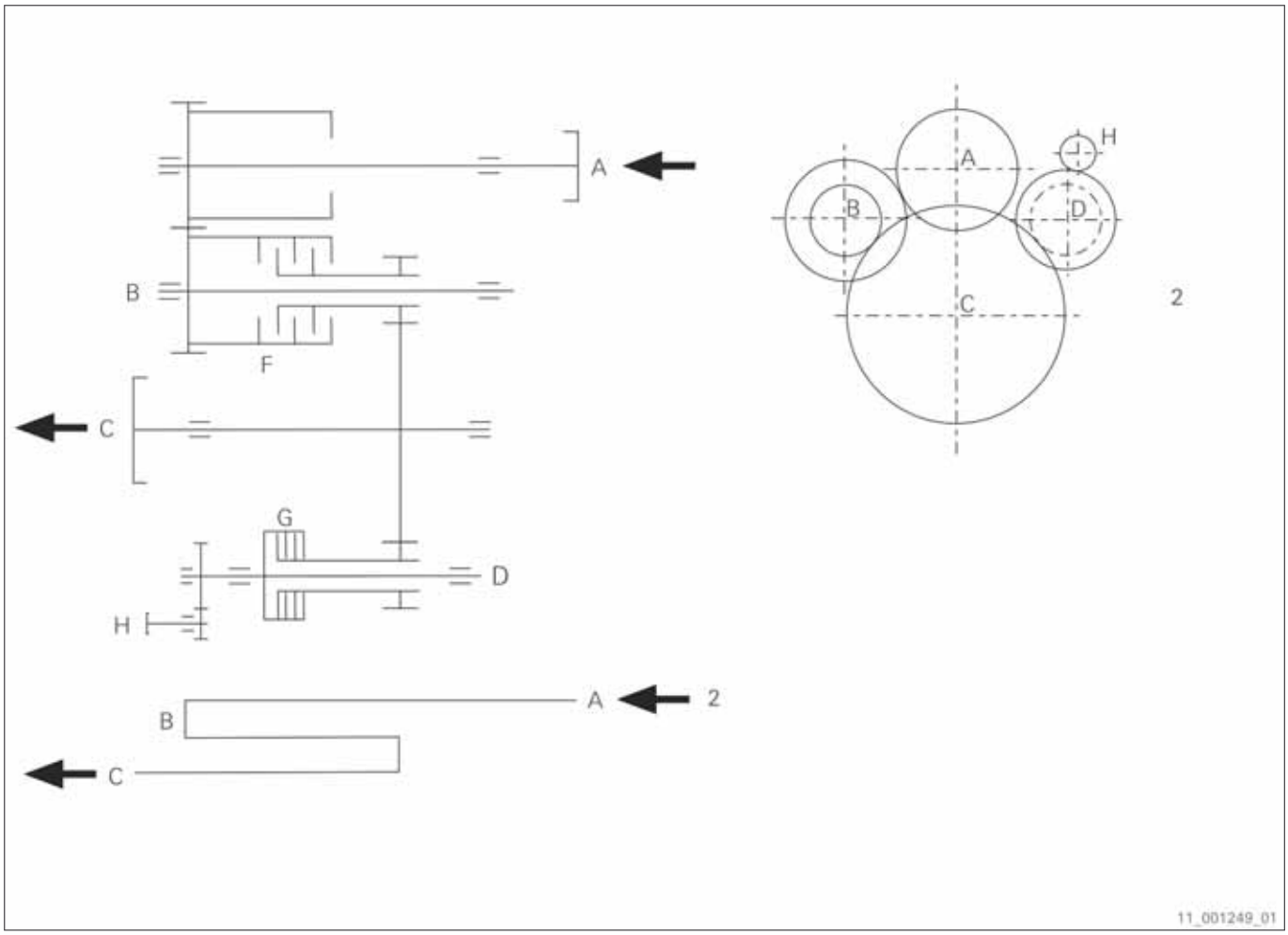

Fig. 54

A Input shaft
C Output shaft
F Clutch for enginewise rotation output rotation direction
H Power take-in input shaft
B Intermediate shaft
D Power take-in output shaft
G Power take-in clutch
2 Output rotation direction enginewise

3.3.5.2 Operation with power take-in

The three following figures schematically illustrate the power take-in in the reverse transmission and in the NR transmission. The view on the transmission diagram is towards the transmission output side.

3.3.5.2.1 Reverse transmission

The pinion that is not engaged is depicted as a dotted line.

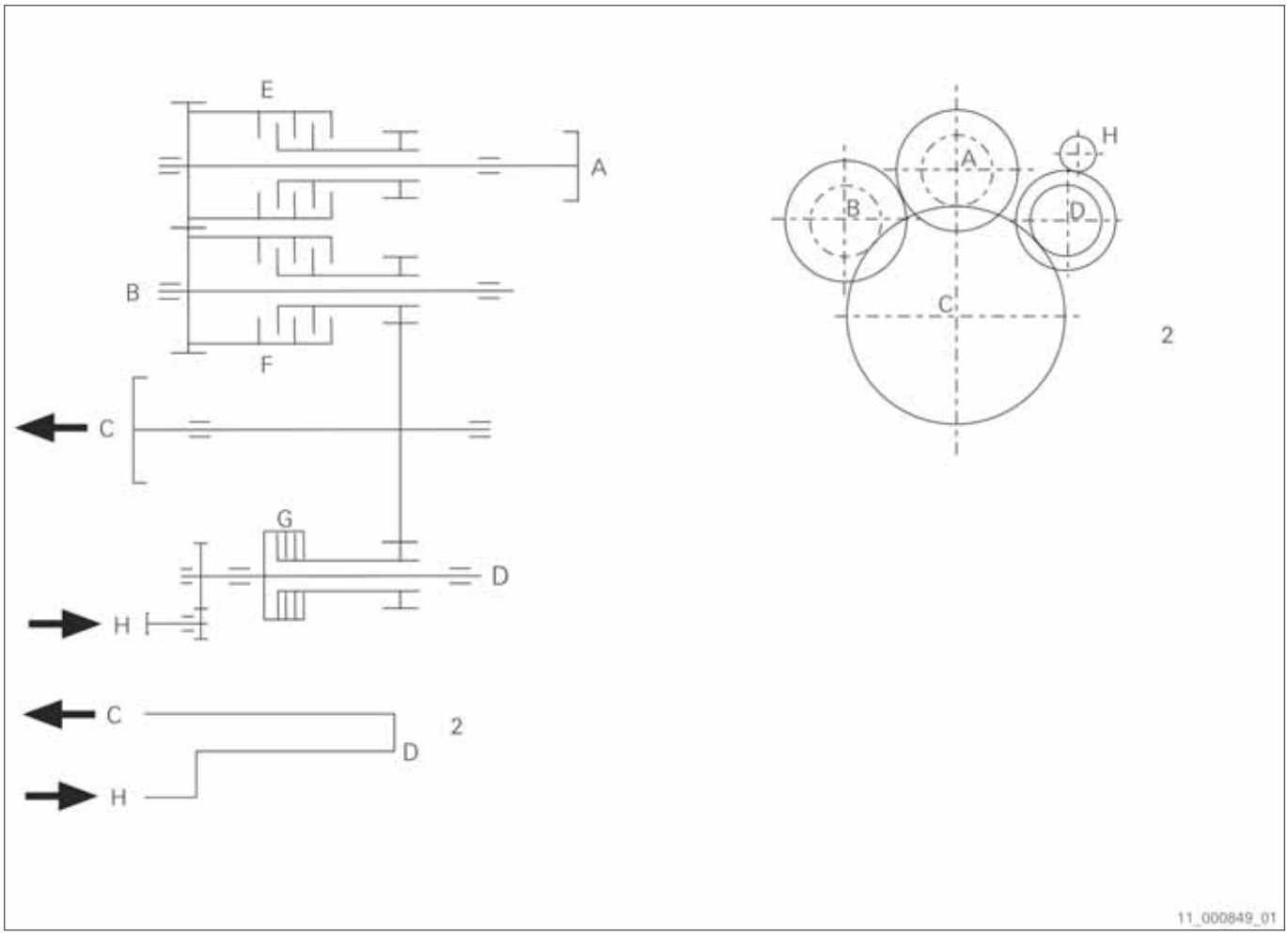

Fig. 55

A Input shaft
C Output shaft
E Clutch for counter-rotation output rotation direction
G Power take-in clutch
1 Output rotation direction counter-enginewise

B Intermediate shaft
D Power take-in output shaft
F Clutch for enginewise rotation output rotation direction
H Power take-in input shaft
2 Output rotation direction enginewise

3.3.5.2.2 NR transmission, counter direction

The pinion that is not engaged is depicted as a dotted line.

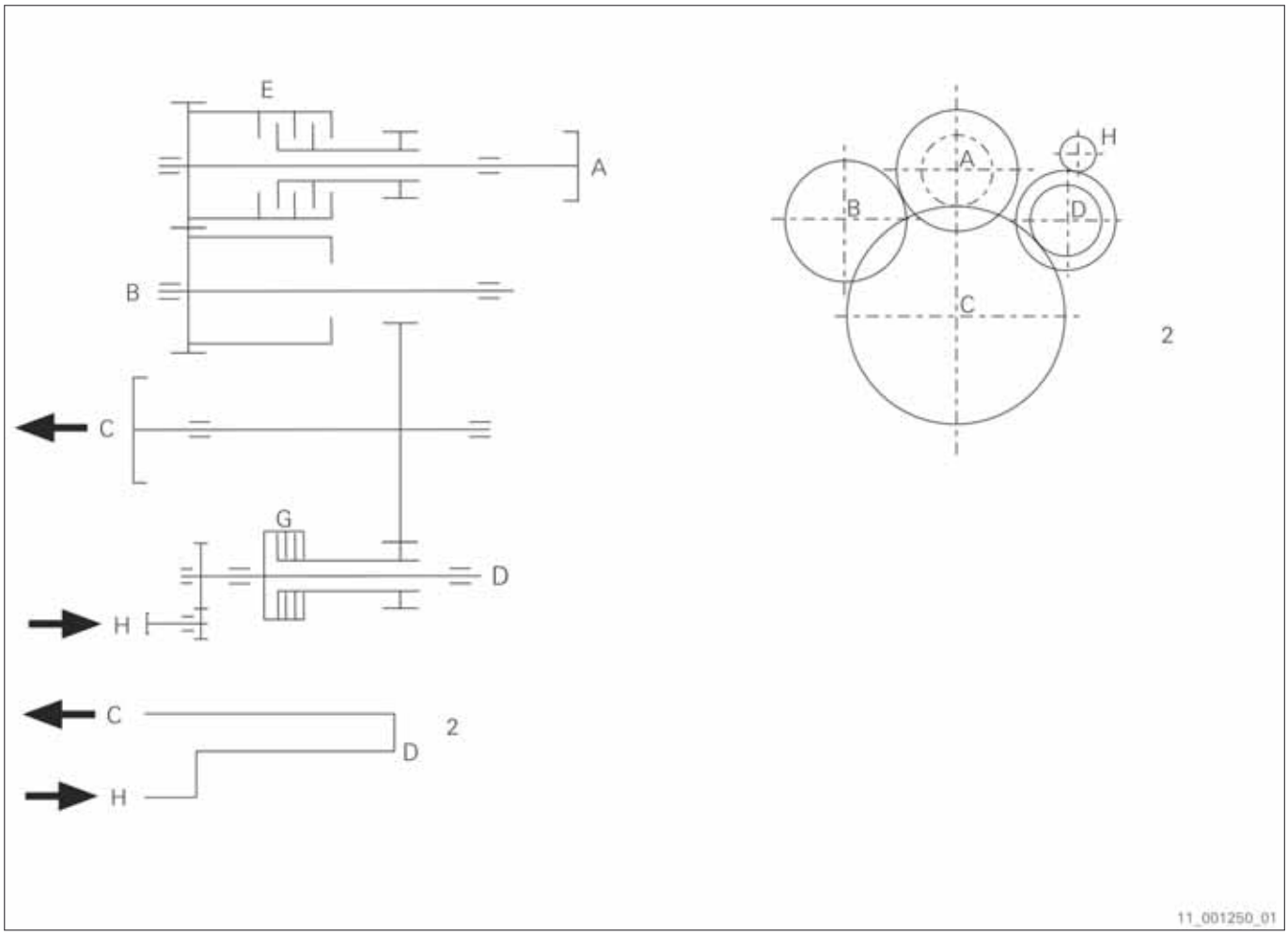

Fig. 56

A Input shaft
C Output shaft
E Clutch for counter-rotation output rotation direction
H Power take-in input shaft
B Intermediate shaft
D Power take-in output shaft
G Power take-in clutch
2 Output rotation direction enginewise

3.3.5.2.3 NR transmission, same direction

The pinion that is not engaged is depicted as a dotted line.

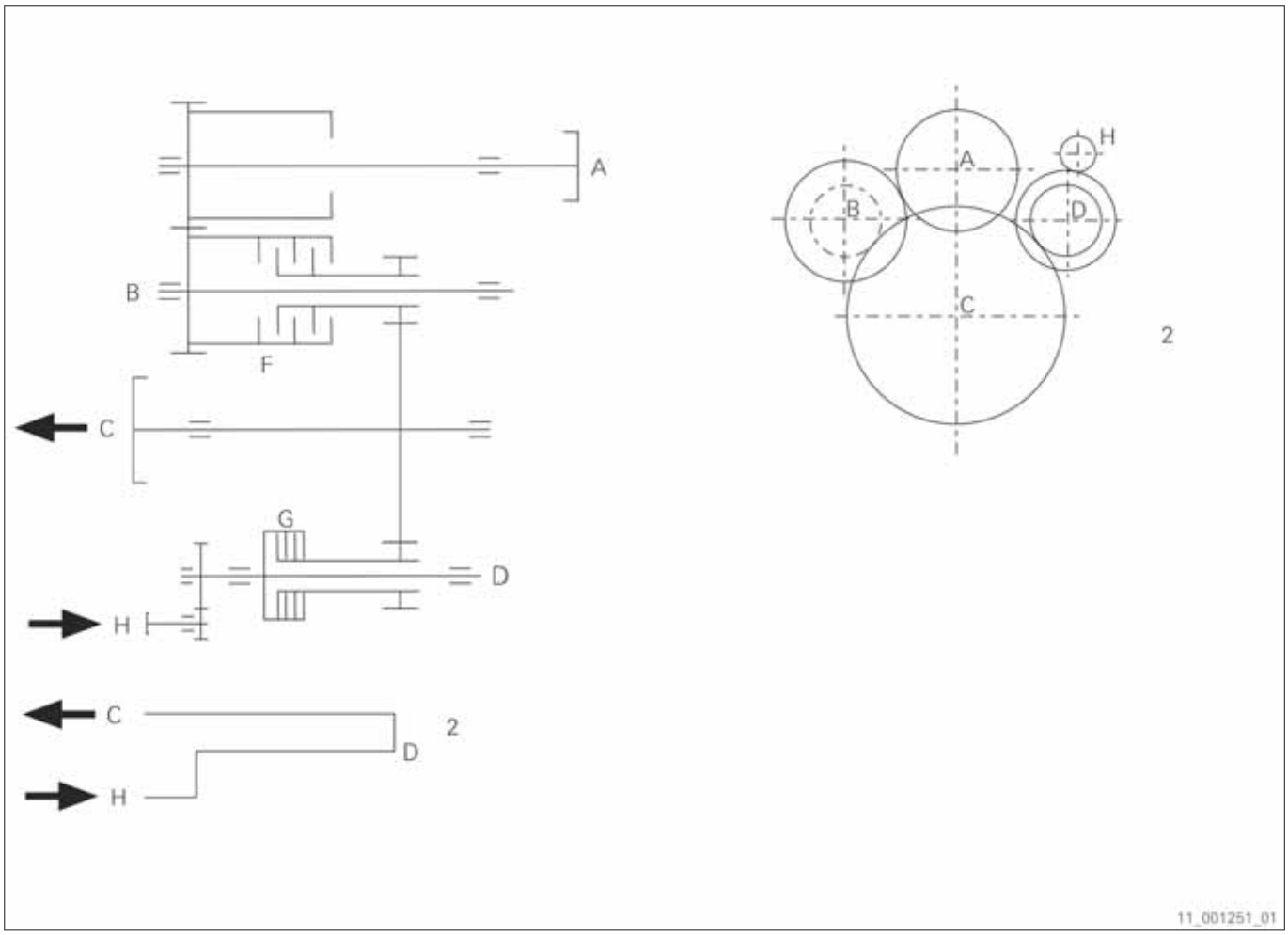

Fig. 57

A Input shaft
C Output shaft
F Clutch for enginewise rotation output rotation direction
H Power take-in input shaft
B Intermediate shaft
D Power take-in output shaft
G Power take-in clutch
2 Output rotation direction enginewise

3.3.5.3 Operation with main drive and power take-in (boost mode)

The three following figures schematically illustrate the power take-in in the reverse transmission and in the NR transmission. The view on the transmission diagram is towards the transmission output side.

3.3.5.3.1 Reverse transmission

The pinion that is not engaged is depicted as a dotted line.

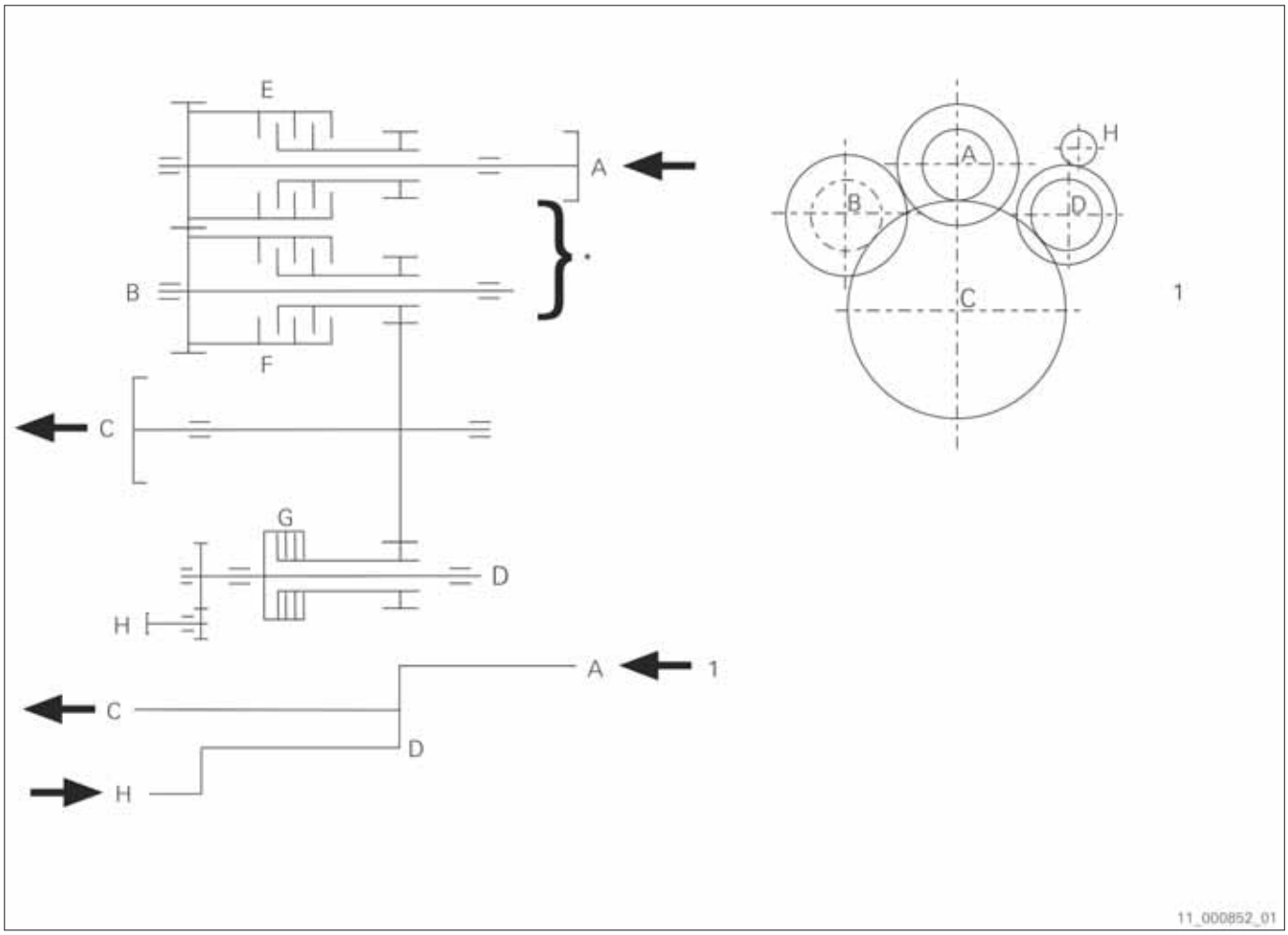

Fig. 58

A Input shaft
C Output shaft
E Clutch for counter-rotation output rotation direction
G Power take-in clutch
1 Output rotation direction counter-enginewise
B Intermediate shaft
D Power take-in output shaft
F Clutch for enginewise rotation output rotation direction
H Power take-in input shaft
* Gears are meshing

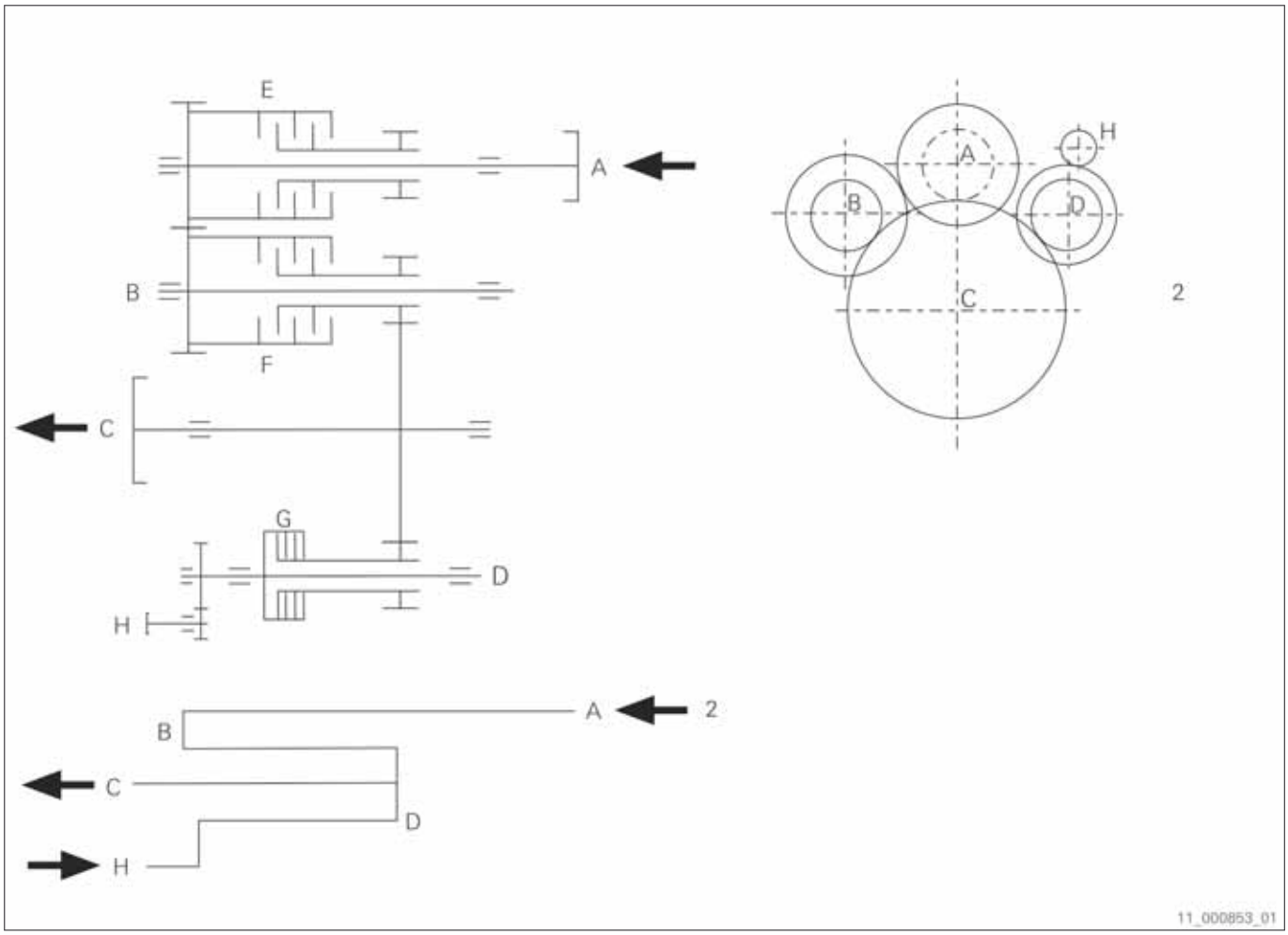

Fig. 59

A Input shaft
B Intermediate shaft
C Output shaft
D Power take-in output shaft
E Clutch for counter-rotation output rotation direction
F Clutch for enginewise rotation output rotation direction
G Power take-in clutch
H Power take-in input shaft
2 Output rotation direction enginewise

3.3.5.3.2 NR transmission, counter direction

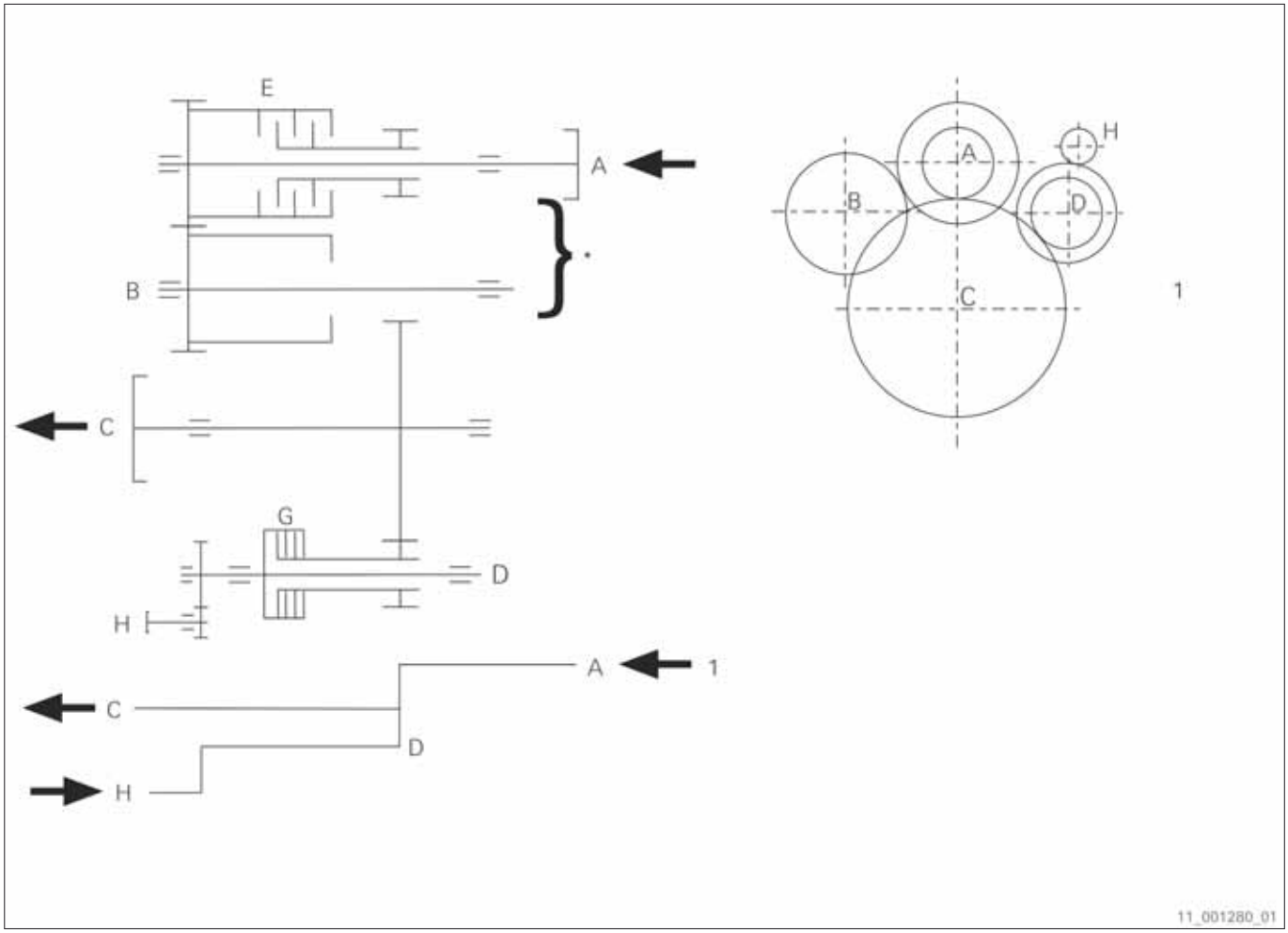

Fig. 60

A Input shaft
C Output shaft
E Clutch for counter-rotation output rotation direction
H Power take-in input shaft
* Gears are meshing
B Intermediate shaft
D Power take-in output shaft
G Power take-in clutch
1 Output rotation direction counter-enginewise

3.3.5.3.3 NR transmission, same direction

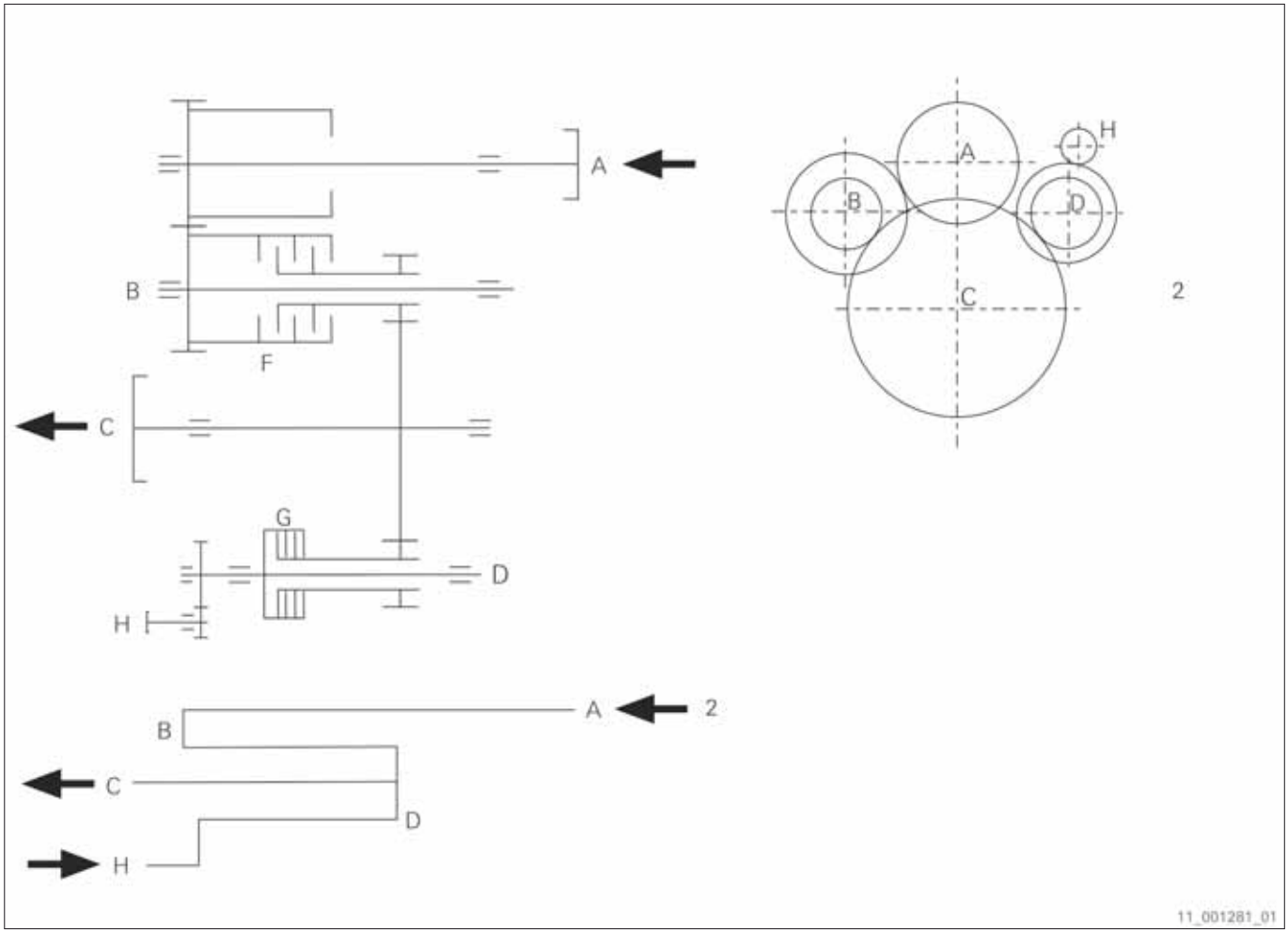

Fig. 61

A Input shaft
C Output shaft
F Clutch for enginewise rotation output rotation direction
H Power take-in input shaft
B Intermediate shaft
D Power take-in output shaft
G Power take-in clutch
2 Output rotation direction enginewise

3.3.6 Shaft brake

The three following figures schematically illustrate the shaft brake in the reverse transmission and in the NR transmissions. The view on the transmission diagram is towards the transmission output side.

3.3.6.1 Reverse transmission

The pinion that is not engaged is depicted as a dotted line.

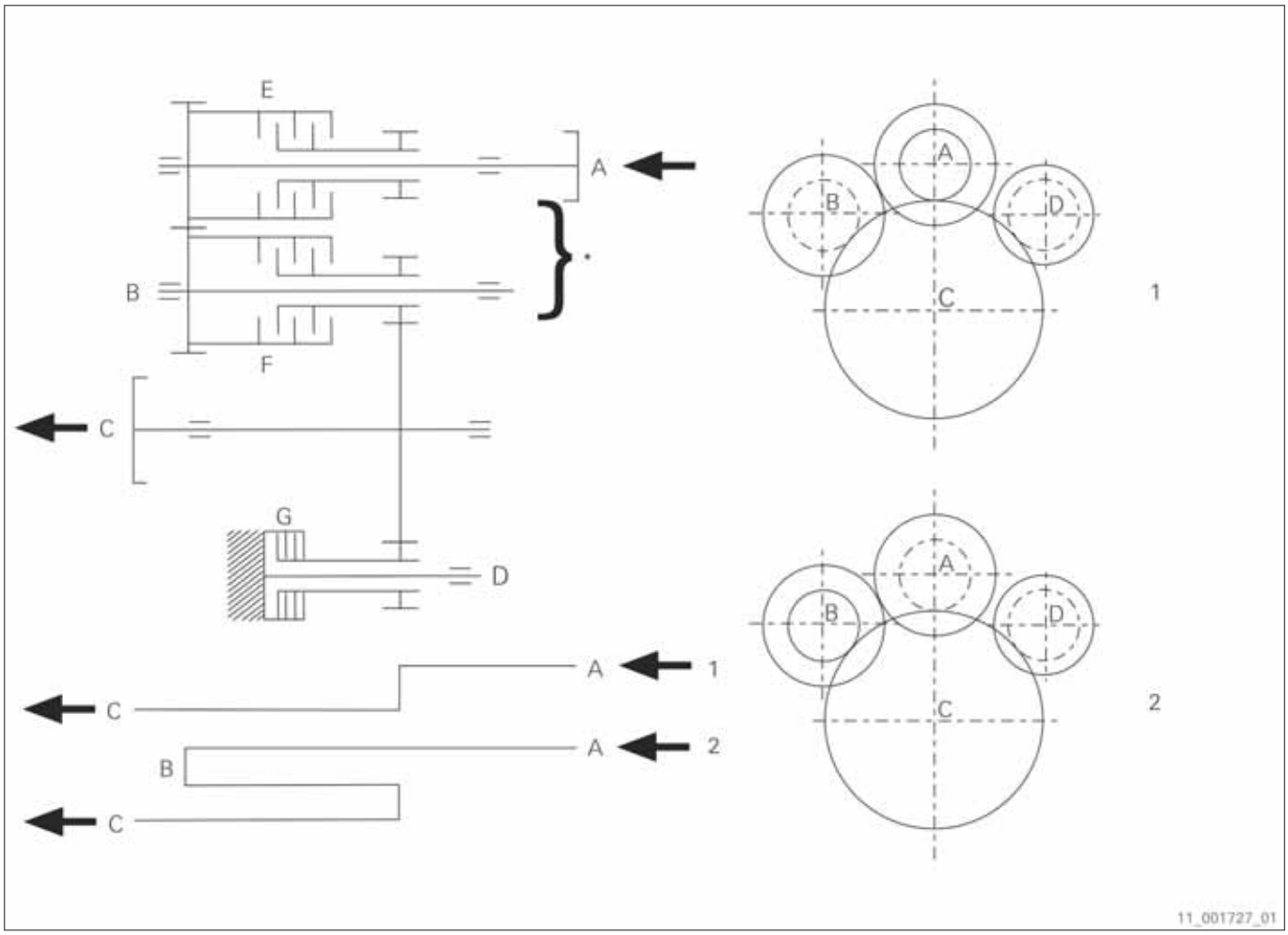

Fig. 62

A Input shaft
C Output shaft
E Clutch for counter-rotation output rotation direction
G Clutch of shaft brake
2 Output rotation direction enginewise

B Intermediate shaft
D Shaft of shaft brake
F Clutch for enginewise rotation output rotation direction
1 Output rotation direction counter-enginewise
* Gears are meshing

3.3.6.2 NR transmission, counter-rotation

The pinion that is not engaged is depicted as a dotted line.

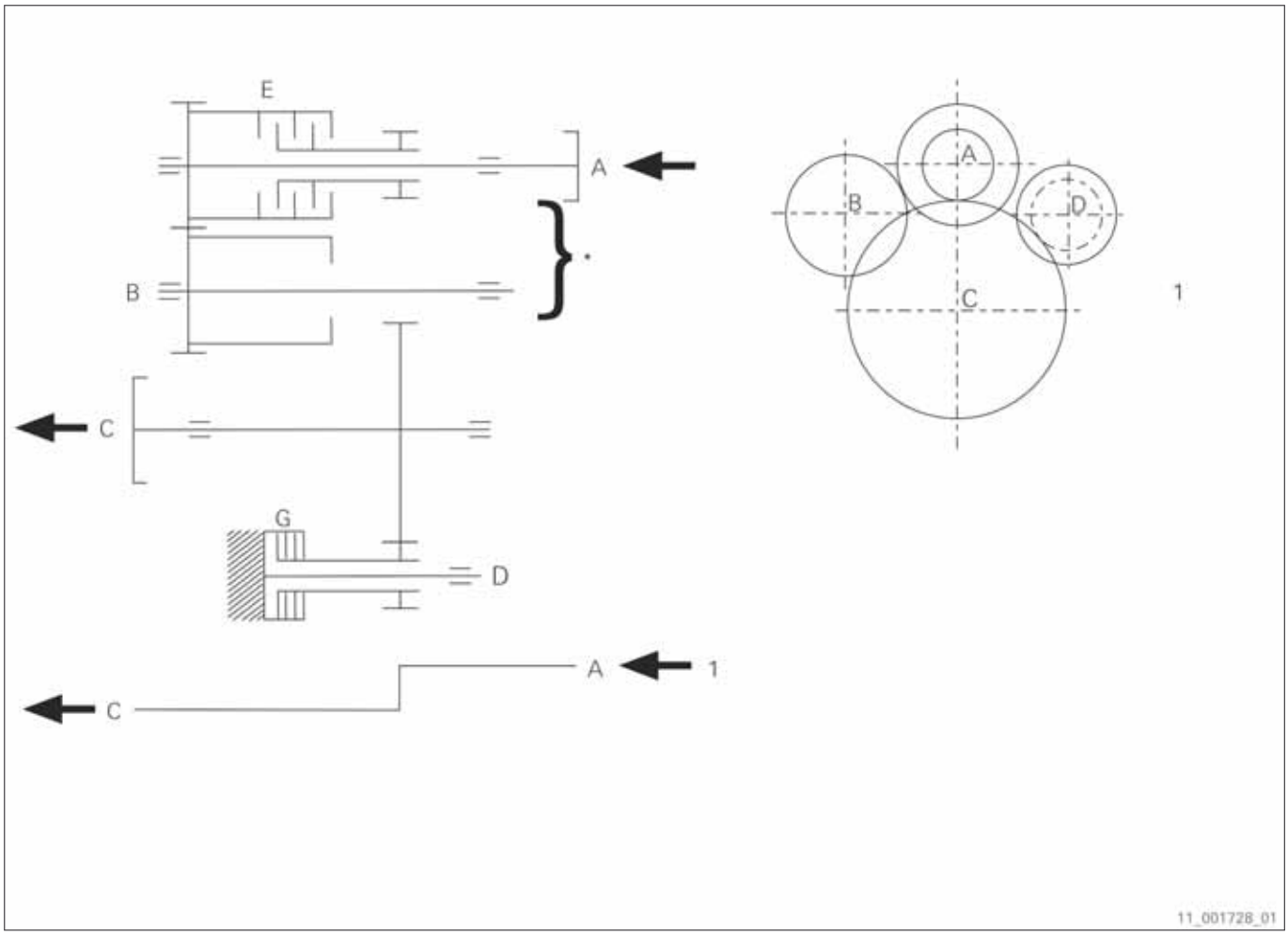

Fig. 63

A Input shaft
C Output shaft
E Clutch for counter-rotation output rotation direction
1 Output rotation direction counter-enginewise
B Intermediate shaft
D Shaft of shaft brake
G Clutch of shaft brake
* Gears are meshing

3.3.6.3 NR transmission, enginewise rotation

The pinion that is not engaged is depicted as a dotted line.

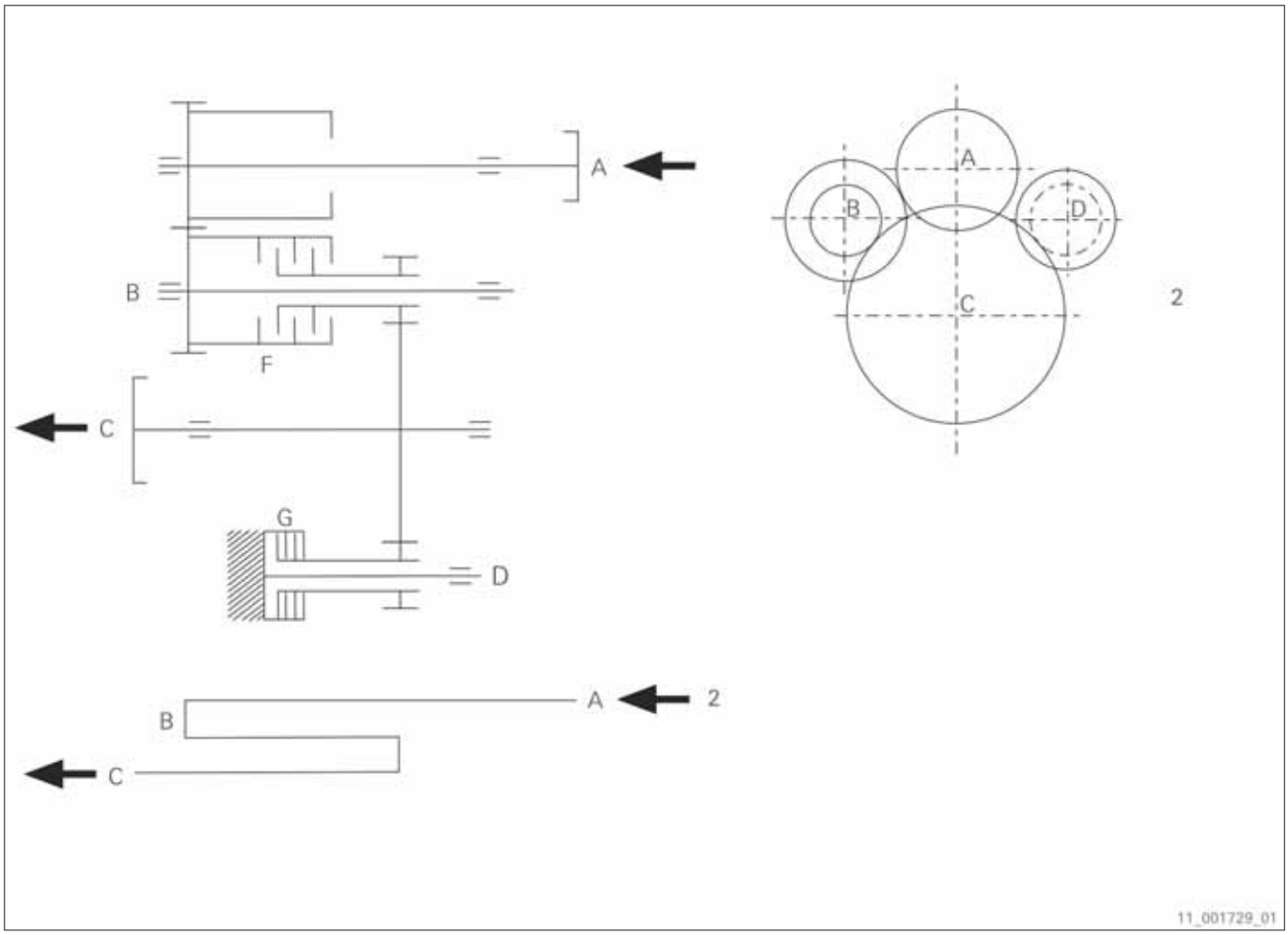

Fig. 64

A Input shaft
C Output shaft
F Clutch for enginewise rotation output rotation direction
H Power take-in input shaft
B Intermediate shaft
D Shaft of shaft brake
G Clutch of shaft brake
2 Output rotation direction enginewise

3.4 Power take-off

The power take-off (PTO) is available as extra equipment for all transmissions belonging to this transmission family.

The power take-off serves, among other things, to drive hydraulic pumps, hydraulic systems for waterjet applications and generators.

The power take-offs are non-engageable, but are permanently driven by the running engine.

The power take-off is available in the following designs:

- Input shaft front PTO
  This power take-off is available in the SAE connection sizes SAE A, SAE B, SAE B-B, SAE C and SAE C-C.
- Top PTO
  This power take-off is available in the SAE connection sizes SAE A, SAE B, SAE B-B, SAE C and SAE C-C.
- Pump PTO
  This power take-off is available in the SAE connection size SAE A.

3.4.1 Input shaft front PTO

The input shaft front PTO can be retrofitted, but may only be retrofitted by trained specialized staff.

The transmissions feature a possible installation point for a power take-off at the input shaft. The input shaft front PTO connected at this possible installation point is driven with the same speed as the input shaft.

Connecting a power take-off at the input shaft is not possible for transmissions of the V version.

3.4.2 Top PTO

The top PTO is attached to the transmission ex works and may only be retrofitted by trained specialized staff.

An additional housing is required in order to implement the power take-off via the helical gearing of the input shaft or the intermediate shaft. The additional housing is installed at the top of the housing cover. Therefore, this power take-off is called top PTO.

3.4.3 Pump PTO

The pump PTO can be retrofitted, but may only be retrofitted by trained specialized staff.

The transmissions feature a possible installation point for a power take-off at the oil pump. The pump PTO connected at this possible installation point is driven with the same speed as the input shaft.

3.5 Power take-in

The power take-in (PTI) is available as extra equipment for the following transmissions belonging to the ZF 3300 transmission family:

- ZF 3311, ZF 3311 NR
- ZF 3351, ZF 3351 NR

- ZF 3356, ZF 3356 NR
- ZF 3361, ZF 3361 NR
- ZF W3310, ZF W3310 NR
- ZF W3350, ZF W3350 NR
- ZF W3355, ZF W3355 NR

The power take-in has the following tasks:

- Transmission of power to the transmission output with the help of an electric motor or a diesel engine without starting the engine for the main drive.
- Transmission of power to the transmission output alongside the main drive (boost function).
- Driving a generator.

Due to internal drag torques, the PTI output might turn when the PTI clutch is open. In case a stationary PTI output is required, an electrically operated PTI shaft brake is available as extra equipment.

3.6 Hydraulic shaft brake

The hydraulic shaft brake is available as extra equipment for the following transmissions from the ZF 3300 transmission family:

- ZF 3311, ZF 3311 NR
- ZF 3351, ZF 3351 NR
- ZF 3356, ZF 3356 NR
- ZF 3361, ZF 3361 NR
- ZF W3310, ZF W3310 NR
- ZF W3350, ZF W3350 NR
- ZF W3355, ZF W3355 NR

The hydraulic shaft brake is located on an additionally installed shaft in the transmission.

The tasks of the hydraulic shaft brake are:

- Holding the propeller shaft in position during maintenance work at the propeller.
- Holding the propeller shaft in position for special applications, e.g.
  - when hauling in nets on fishing boats
  - to avoid coasting in towed or trailed condition
- Decelerating the propeller shaft to facilitate switching processes and crash stop maneuvers.

When engaging the shaft brake, observe the following operating conditions:

- Only engage the shaft brake when in neutral shift position.
- During crash stop maneuvers, observe a waiting time of at least 15 minutes between two braking actions.
- If used as a holding brake during engine standstill, use an external pump unit for the oil supply.
- Observe the maximum permissible torques of the shaft brake provided in the installation drawing.
- Do not exceed the maximum value provided in the installation drawing for the inertial masses dynamically connected through the shaft brake.

  The inertia mass is the total volume of the propeller shaft and the propeller in the water.

3.7 Oil supply

The following oil supply measurands are recorded on the transmission:

- Oil temperature
- Filter differential pressure

  Filter differential pressure is only recorded in transmissions equipped with a change-over filter.
- Pressure upstream of oil filter

  Pressure upstream of oil filter is only recorded in transmissions equipped with a slot-type filter.
- Lubricating oil pressure
- Clutch oil pressure

Tapped holes are located on the transmission housing as standard in order to mount sensors or switches for the monitoring unit.

3.7.1 Main drive

3.7.1.1 Engine-dependent oil pump

The oil sump is located in the bottom part of the housing. A constantly conveying gear pump conveys the oil flow for the transmission lubrication, transmission cooling and shifting of the multidisk clutch.

The engine-dependent oil pump is driven by the intermediate shaft via a driver. The constantly conveying gear pump functions according to the displacement principle and is largely self-priming. The conveying volume of this oil pump depends on the speed of the input shaft. The gear pump boasts a high conveying capacity so that, even at a low input speed, sufficient oil is available for transmission lubrication and transmission cooling. Thanks to the high conveying capacity of the engine-dependent oil pump, a rapid response of the respectively engaged multidisk clutch is ensured.

3.7.1.2 Oil filter

In order to clean the oil, all transmission types are equipped with an oil filter with filter cartridge or with a change-over filter . During operation, the change-over filter can be switched from the filter cartridge to a purification screen. Consequently, it is even possible to replace the filter during operation.

3.7.2 Power take-in

3.7.2.1 Pump unit's oil pump

For transmissions with a power take-in, an additional oil pump is required to sufficiently supply oil in PTI operation for shifting the multidisk clutch, lubricating the transmission and cooling the transmission.

The additional oil pump is delivered loosely together with the transmission.

3.7.2.2 Oil filter

In order to clean the oil in the oil circuit of the PTI operation, all transmission designs with a power take-in are equipped with a high pressure filter .

3.7.3 Shaft brake

3.7.3.1 Pump unit's oil pump

For transmissions with a shaft brake, an additional oil pump is required to ensure sufficient oil for engaging the multidisk clutch, lubricating the transmission and cooling the transmission even with activated shaft brake and engine switched off.

The additional oil pump is fit close to the transmission.

3.7.4 NC transmission with attached pump

3.7.4.1 Engine-dependent oil pump

The oil sump is located in the bottom part of the housing. A constantly conveying gear pump conveys the oil flow for the transmission lubrication and transmission cooling.

The engine-dependent oil pump is driven by the intermediate shaft via a driver. The constantly conveying gear pump functions according to the displacement principle and is largely self-priming. The capacity of this oil pump depends on the speed of the input shaft. The gear pump boasts a high conveying capacity so that, even at a low input speed, sufficient oil is available for transmission lubrication and transmission cooling.

3.7.4.2 Oil filter

In order to clean the oil, all transmission types are equipped with an oil filter with filter cartridge .

3.7.5 NC transmission with external pump

3.7.5.1 Electrically driven oil pump

The oil sump is located in the bottom part of the housing. The electric oil pump and is located outside the transmission.

The oil pump is not part of the ZF scope of supply.

The electric oil pump conveys the oil flow for the transmission lubrication and transmission cooling.

3.7.5.2 Oil filter

In order to clean the oil, all transmission types are equipped with an oil filter with filter cartridge .

3.8 Cooling system

3.8.1 Main drive

3.8.1.1 Transmission cooling

In order to cool the oil, a transmission oil cooler consisting of a sea water resistant material is attached to the transmission housing. The transmission oil cooler is structured in a compact and lightweight construction method according to the tube bundle principle.

The heat generated in the transmission is discharged through the transmission oil cooler. To a lesser extent, the heat is also emitted via the housing surface.

The oil flows into the transmission oil cooler, through the oil filter and, finally, into the control unit. From the control unit, the oil flows to the multidisk clutches and the transmission lubrication points.

3.8.2 Power take-in

3.8.2.1 Transmission cooling

In PTI operation, the oil is pumped by an oil pump from the oil sump through the high pressure filter to the control unit for the power take-in. From the control unit for the power take-in, a portion of the oil flows directly to the power take-in's multidisk clutch. The other portion of the oil flows back into the transmission's oil circuit upstream of the transmission oil cooler and is cooled by the transmission oil cooler. The cooled oil flows through the main drive's oil filter and finally into the main drive's control unit. From the main drive's control unit, the oil flows to the transmission lubrication points.

The transmission oil cooler for the main drive is generally not in operation in PTI operation since the water pump of the main engine is stationary in PTI operation. The cooling water supply for the main drive's transmission oil cooler must be ensured in PTI operation by means of an electric cooling water pump.

3.8.3 NC transmission

3.8.3.1 Transmission cooling

In order to cool the oil, a transmission oil cooler consisting of a sea water resistant material is attached to the transmission housing. The transmission oil cooler is structured in a compact and lightweight design according to the tube bundle principle.

The heat generated in the transmission is discharged through the transmission oil cooler. To a lesser extent, the heat is also emitted via the housing surface.

The oil flows into the transmission oil cooler, through the oil filter and finally to the transmission lubrication points.

3.9 Clutch

3.9.1 Main drive

3.9.1.1 Hydraulic multidisk clutch

The actuation of the hydraulic multidisk clutch leads to a uniform and reliable gear change. The downforce of the multidisk clutch is modulated during the gear change. The modulation of the multidisk clutch downforce leads to a jolt-free transfer or interruption of the force flow within the transmission. The engaged multidisk clutch is supplied with a sufficient oil flow to ensure that the arising heat is quickly discharged and that the multidisk clutch does not suffer thermal overload.

In the event of faults in the oil circuit, there is an option to travel with a mechanical emergency control. In order to do so, the corresponding multidisk clutch is mechanically pushed together by three screws respectively that are accessible from the outside while the transmission is stationary. The reverse transmissions can be driven using the emergency control with the output rotation directions enginewise rotation or counter-rotation. Transmissions in NR design can be driven using the emergency control only with an output rotation direction that is dependent on the location of the multidisk clutch .

3.9.2 Power take-in

3.9.2.1 Hydraulic multidisk clutch

The hydraulic multidisk clutch on the power take-in's input shaft is shifted by the oil flow from the additional oil pump.

3.9.3 Shaft brake

3.9.3.1 Hydraulic multidisk clutch

During engine standstill, the hydraulic shaft brake is shifted by the oil flow from the additional oil pump.

3.10 Control

3.10.1 Main drive

3.10.1.1 Control unit and transmission actuation

The control unit is arranged as a complete assembly on the transmission housing.

The control unit contains the following components amongst others:

- Control valve for filling and venting of the multidisk clutch

- Control valve in order to control the level of the clutch oil pressure
- Timer for the modulation of the clutch oil pressure

The control valve is axially moved in a hydraulic way into the neutral, enginewise rotation or counter-rotation shift position. The oil flowing out of the control unit is used for lubricating and cooling the clutch disks, meshings and bearing positions.

The transmission actuation takes place via a mechanical or electric actuation unit that is located on the control unit. The electric transmission actuation is part of the transmission basic version.

Mechanical transmission actuation
In order to move the control valve, the oil flow is controlled via a mechanically actuated pilot valve.

Electric transmission actuation
In order to move the control valve, the oil flow is controlled via an electrically actuated pilot valve.

3.10.2 Power take-in

3.10.2.1 Control unit and transmission actuation

A control unit for the power take-in is arranged in addition as a complete assembly on the transmission housing.

The control valve is axially moved hydraulically into the clutch open and clutch closed shift positions. The oil flowing out of the control unit is used for lubricating and cooling the clutch disks, meshings and bearing positions.

The transmission actuation takes place via an electric actuation unit that is located on the control unit. An electrically actuated pilot valve controls the oil flow.

3.10.3 Shaft brake

3.10.3.1 Control unit and transmission actuation

A control unit for the shaft brake is arranged in addition as a complete assembly on the transmission housing.

The control valve is axially moved hydraulically into the clutch open and clutch closed shift positions. The oil flowing out of the control unit is used for lubricating and cooling the clutch disks, meshings and bearing positions.

The transmission actuation takes place via an electric actuation unit that is located on the control unit. An electrically actuated pilot valve controls the oil flow.

3.11 Trolling

Trolling mode is only possible for transmissions with an actuated trolling valve.

The trolling valve is available as extra equipment for reverse transmissions.

In trolling mode, lower propeller speeds compared to non-trolling mode are achieved. Therefore, trolling mode is used during maneuvers requiring a low ship speed. In trolling mode, the propeller speed can be set to approx. 0.2 - 0.8-fold of the propeller speed when in non-trolling mode depending on the transmission ratio.

Typical use cases for trolling mode are:

- Journeys with a restricted speed such as when passing through canals
- Maneuvers in ports and at piers
- Maintaining position in police and rescue boats
- Towing small boats

The following trolling equipment is available for reverse transmissions:

- Electric trolling
- ZF Autotroll®

3.11.1 Function description

The reduction of the propeller speed is achieved through a defined slip process of the clutch disks. In trolling mode, the clutch oil pressure is reduced to such an extent that a targeted slip process of the clutch disks takes place.

⚠ CAUTION

Risk of burn injuries due to contact with hot surfaces.
Slight or moderate injury possible.
⇨ Wear protective gloves.

The transmission oil circuit is designed in such a manner that the friction heat that occurs in the multidisk clutch is dissipated. The transmission housing is getting hot when trolling mode is used for a longer time.

The trolling valve used to set the clutch oil pressure is centrally located on the transmission control unit.

Trolling means driving with a slipping multidisk clutch. Turning and maneuvering in the port area is possible in trolling mode. The propeller thrust generated through the low propeller speed may not be enough to sufficiently move the ship.

Large, relatively weakly motorized displacement boats cannot or can only be sluggishly maneuvered in trolling mode.

ZF Friedrichshafen AG recommends testing the response of the ship when maneuvering in trolling mode in open waters. In the event of unsatisfactory results, the responsible skipper or acceptance officer must prohibit use in the port area.

3.11.2 Electric trolling

In trolling mode, the clutch oil pressure on the transmission is set via an electric control signal. The actuation unit required for this is not part of the transmission.

Observe the operating instructions of the actuation unit.

The trolling equipment may be used without any time restriction when moving forwards or backwards. In doing so, the permissible values for the engine speed and the lubricating oil temperature may not be exceeded.

Transmissions with electric trolling are not equipped with a fail-safe system against excessively high engine speeds in trolling mode. Trolling mode must be stopped if the permissible values for the engine speed and the lubricating oil temperature are exceeded.

Maximum permissible engine speed in trolling mode

In the event of immersed standard propellers with a parabolic propeller curve, the maximum engine speed is 50% of the maximum permissible operating speed but no higher than 1,000 rpm. In the event of surface propellers, the maximum engine speed is 700 rpm.

The maximum permissible engine speed does not apply for the following trolling applications:

- Dynamic positioning
- Bollard pull

Maximum permissible oil sump temperature in trolling mode

The maximum permissible oil sump temperature is 90°C.

3.11.2.1 Electric actuation for trolling mode

Connection values for the solenoid valve (7) of the electric actuation:

- Operating voltage: U = 24 ± 2.4 V
- Solenoid valve power consumption: P = 18 W

Connection values for the proportional valve (1) of the electric actuation:

- Chopper frequency: 500 Hz in a voltage range of U = 24 + 6 V and U = 24 - 8 V
- Total current range: I = 150 - 450 mA

The connection values are stipulated in the installation drawing for the electric actuation of the trolling mode.

The electric actuation unit consists of an electrically-moved solenoid valve (7) for switching the trolling function on and off and a proportional valve (1) in order to set the clutch oil pressure. The actuation of these two valves is carried out by the shipyard. If trolling mode is active, the solenoid valve (7) is actuated without interruption with a voltage of 24 V and a power of 18 W. In order to set the clutch oil pressure, a current consumption in the range of between 150 and 450 mA is stipulated for the proportional valve (1) with a resistance of between 23.5 and 26.5 Ohm.

The electric trolling valve can be retrofitted. Retrofit of the trolling valve only by specialized and authorized staff.

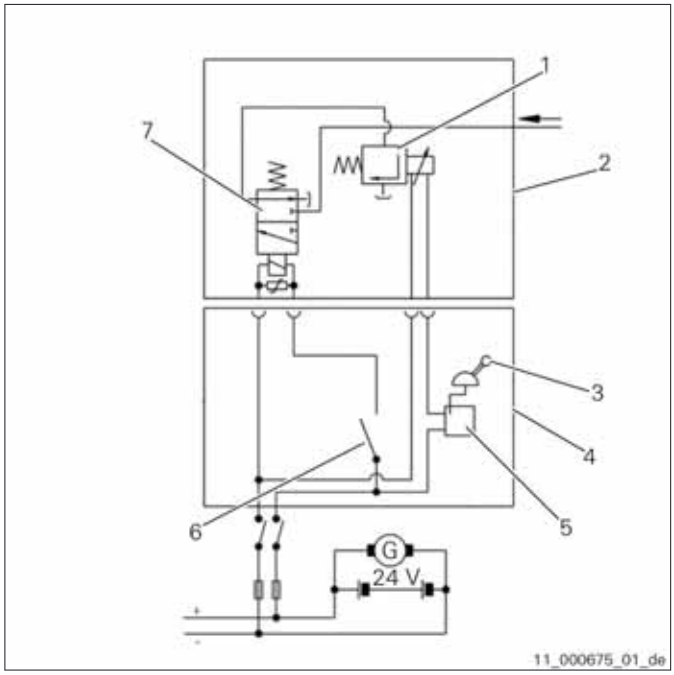

Fig. 65

1 Proportional valve, ZF scope of supply
2 Electric actuation unit, ZF scope of supply
3 Trolling MIN/MAX deck switch, not part of the ZF scope of supply
4 Deck switch, not part of the ZF scope of supply
5 Trolling control unit, not part of the ZF scope of supply
6 Trolling mode on/off switch, not part of the ZF scope of supply
7 Solenoid valve, ZF scope of supply

3.11.3 ZF Autotroll®

The ZF Autotroll® trolling equipment can be used in conjunction with the electric transmission actuation. The ZF Autotroll® is a regulating piece of trolling equipment. In doing so, the propeller speed as stipulated by the actuation unit is regulated via the degree of drive-through from the transmission in trolling mode.

The actuation unit required for this is not part of the transmission.

Observe the operating instructions of the actuation unit.

The ship can also be reversed while in motion in ZF Autotroll® mode. In doing so, the response of the ship is significantly improved by the reversing aid contained in the electronics.

Properties of the ZF Autotroll® system:

- The propeller speed is kept constant in the event of a constant speed and constant drive lever position for trolling mode.
- Weakly motorized displacement boats can be smoothly maneuvered by means of a reversing sequence. During the reversing sequence, the clutch oil pressure is briefly raised while reversing.
- It is not possible for an operating error of the transmission to occur.

Transmissions equipped with ZF Autotroll® are supplied fully assembled and tested.

Scope of supply of the ZF Autotroll® system:

- Electric trolling valve
- Electronic control unit
- Application-related programming of the control unit
- Speed sensor at primary clutch side
- Speed sensor at secondary clutch side
- Wiring harness in order to connect all ZF Autotroll® components installed on the transmission
- Socket with a mating connector as an electric interface to the ship control unit

The following components are not part of the ZF Autotroll® system scope of supply:

- Onboard ship actuation unit for electric transmission actuation
- Onboard ship actuation unit for trolling actuation
- Voltage supply
- Control lights
- Dimmer equipment for the control lights
- Onboard ship cabling through to the electric interface on the transmission

3.12 Transmission monitoring

3.12.1 ZF 3000 family, ZF 3000 A family, ZF 3000 V family, ZF 3000 D family

The digits in brackets refer to the marked positions in the installation drawing.

The NR transmissions either have the measuring point (38) or the measuring point (39).

Measuring point (171) is located opposite the output side with the ZF 3000 A family and with the ZF 3000 V family.

The following figures show the ZF 3000 transmission version.

Fig. 66

1 Measuring point for lubricating oil pressure (22)
2 Measuring point for oil sump temperature (41)
3 Measuring point for oil level monitoring (171)
4 Measuring point for oil sump temperature (11)

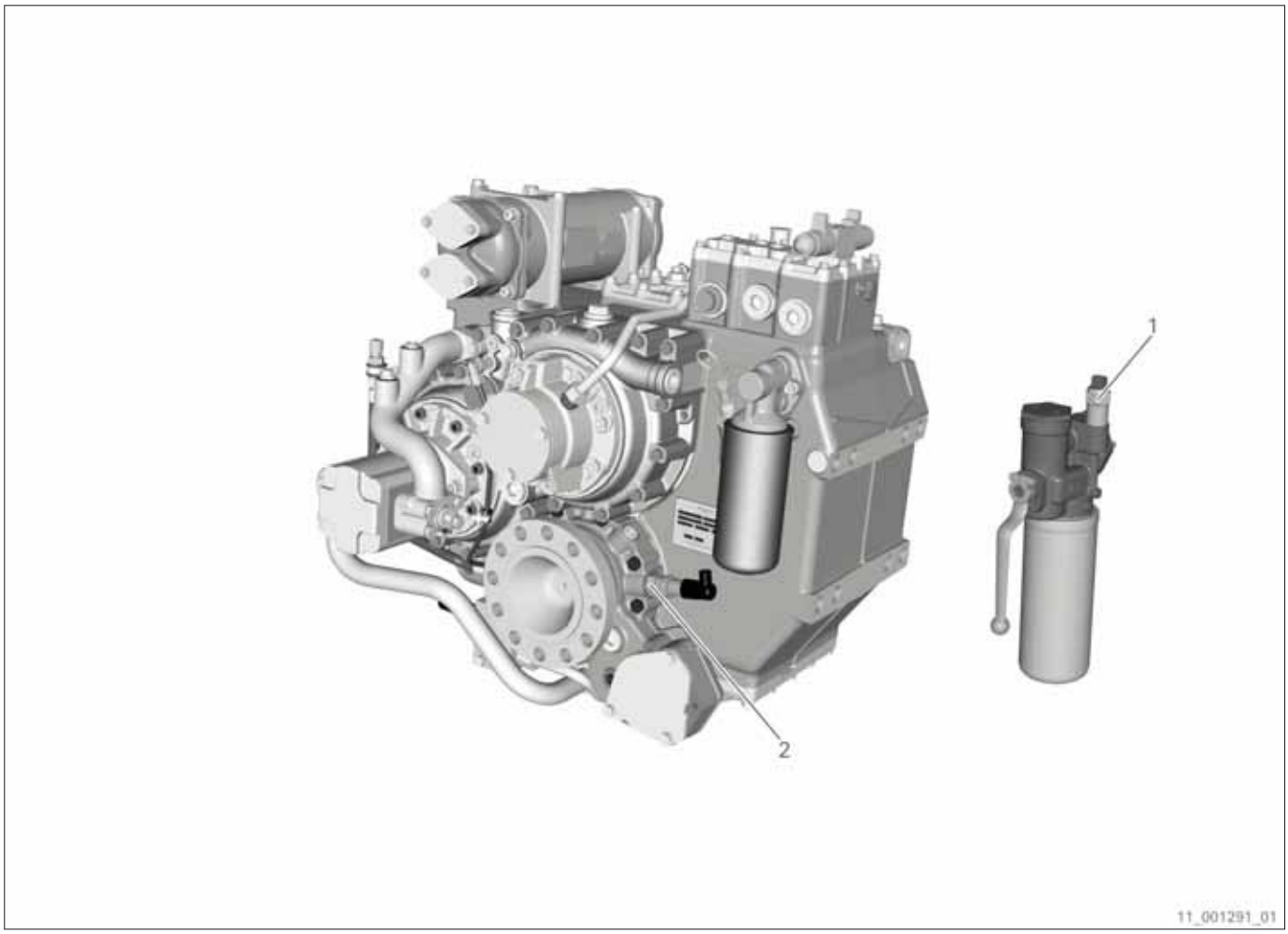

Fig. 67

1 Differential pressure switch (127), only available with transmissions approved by a classification society

2 Measuring point for thrust bearing temperature (128)

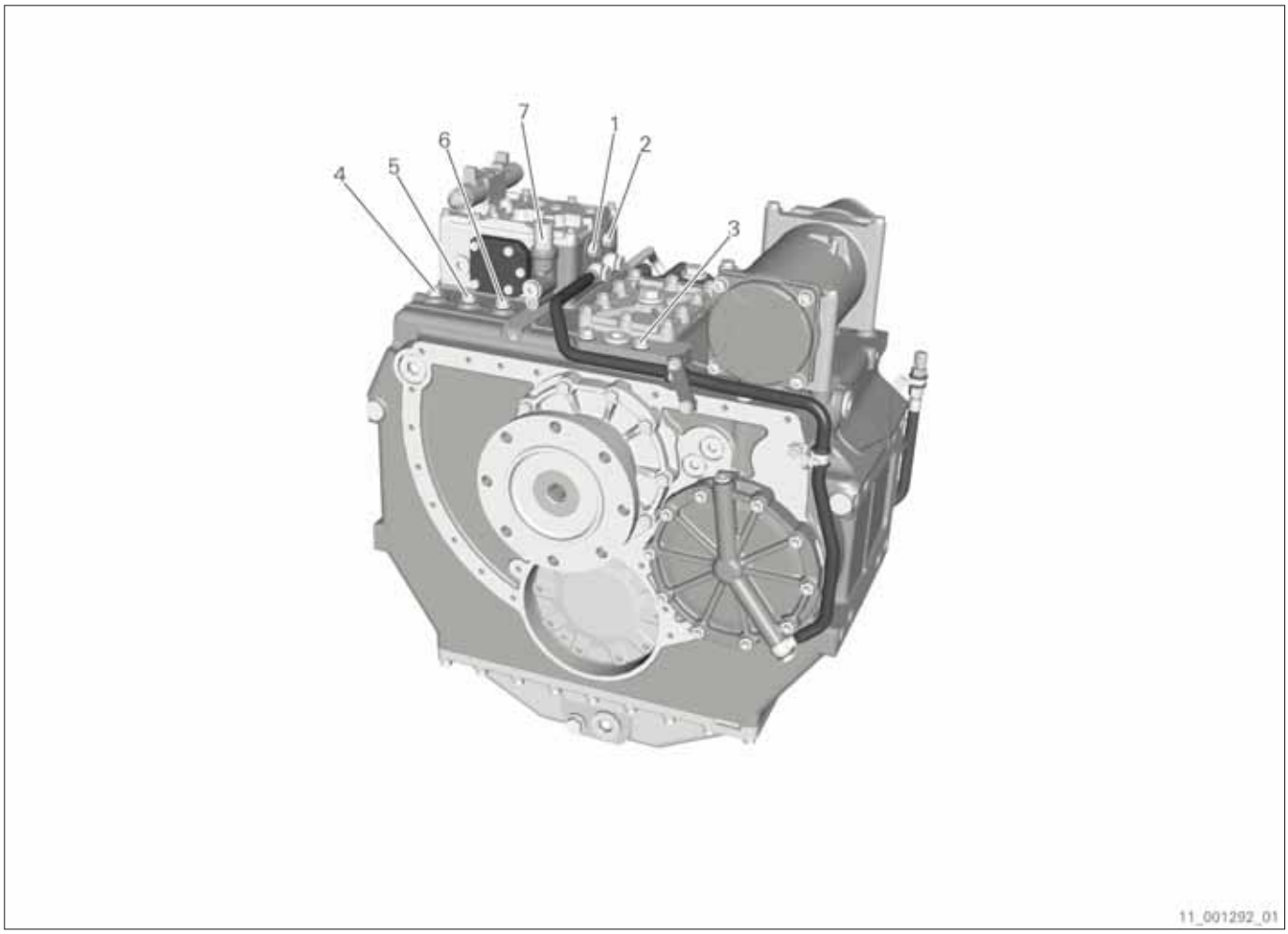

Fig. 68

1 Pressure switch for enginewise rotation (39), with D version pressure switch for counter-rotation (38)
2 Pressure switch for counter-rotation (38), with D version pressure switch for enginewise rotation (39)
3 Measuring point for oil temperature downstream of transmission oil cooler (53)
4 Measuring point for clutch oil pressure (2)
5 Measuring point for clutch oil pressure (27)
6 Measuring point for clutch oil pressure (21)
7 Neutral switch (137)

3.12.2 ZF 3000 NC (counter-rotation) family

The digits in brackets refer to the marked positions in the installation drawing.

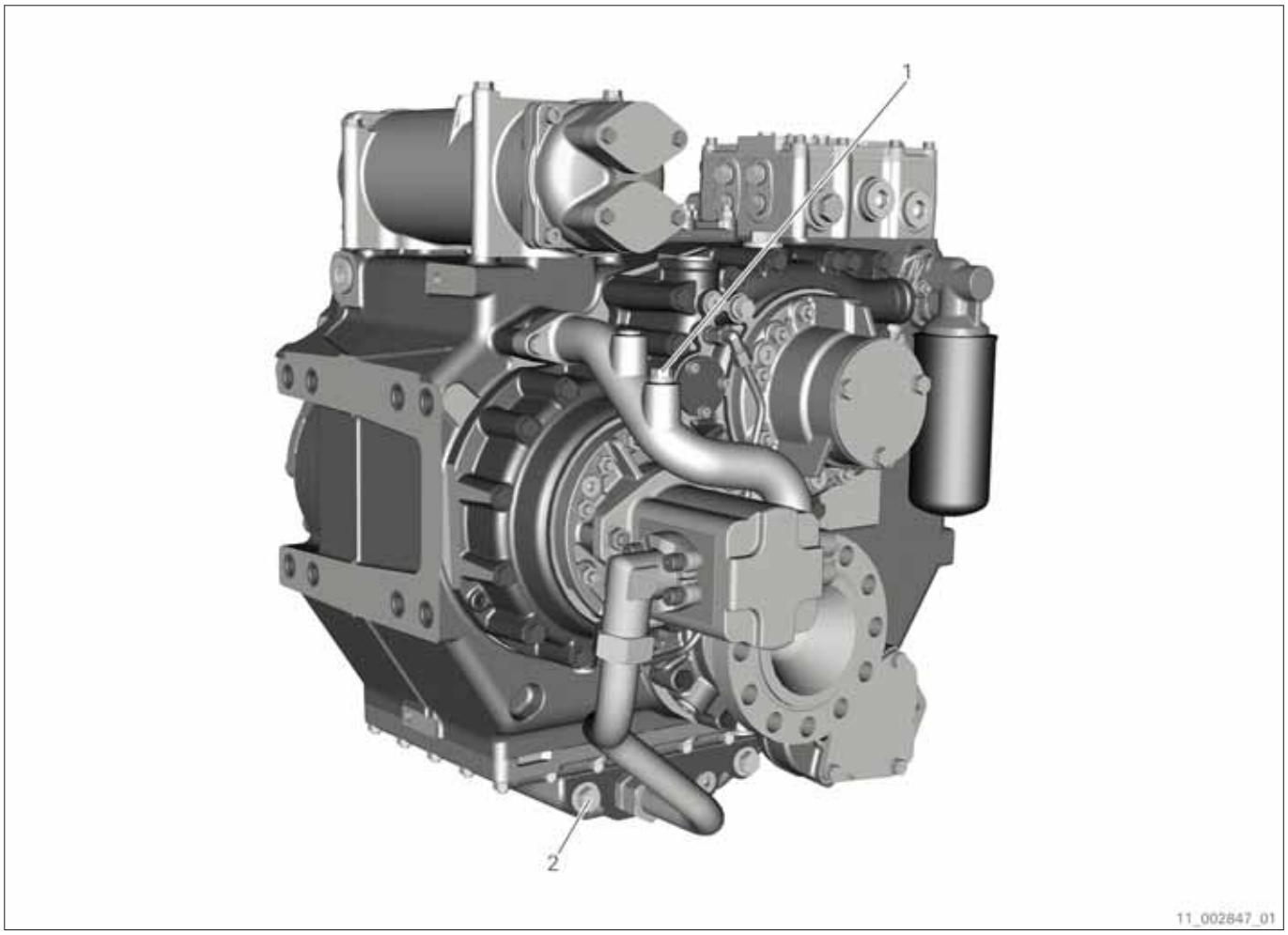

Fig. 69

1 Measuring point for oil sump temperature (41)

2 Measuring point for oil sump temperature (11)

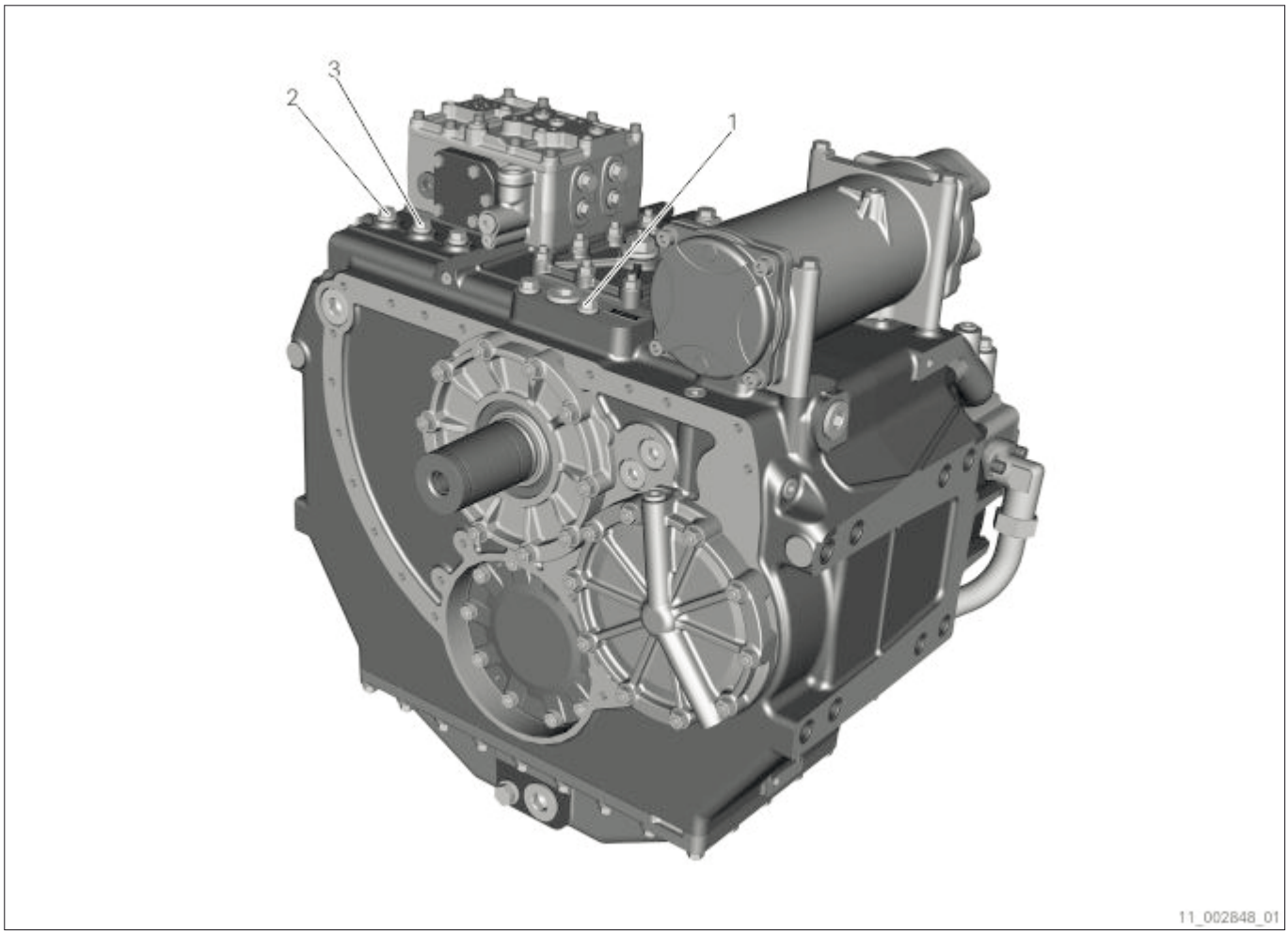

Fig. 70

1 Measuring point for oil temperature downstream of transmission oil cooler (53)
2 Measuring point for lubricating oil pressure (22)
3 Measuring point for lubricating oil pressure (22)

3.12.3 ZF 3300 family with aluminum housing

The digits in brackets refer to the marked positions in the installation drawing.

The NR transmissions either have the measuring point (38) or the measuring point (39).

Fig. 71

1 Measuring point for oil sump temperature (41)
2 Measuring point for lubricating oil pressure (22)
3 Measuring point for thrust bearing temperature (128)
4 Measuring point for oil sump temperature (11)
5 Measuring point for oil level monitoring (171)

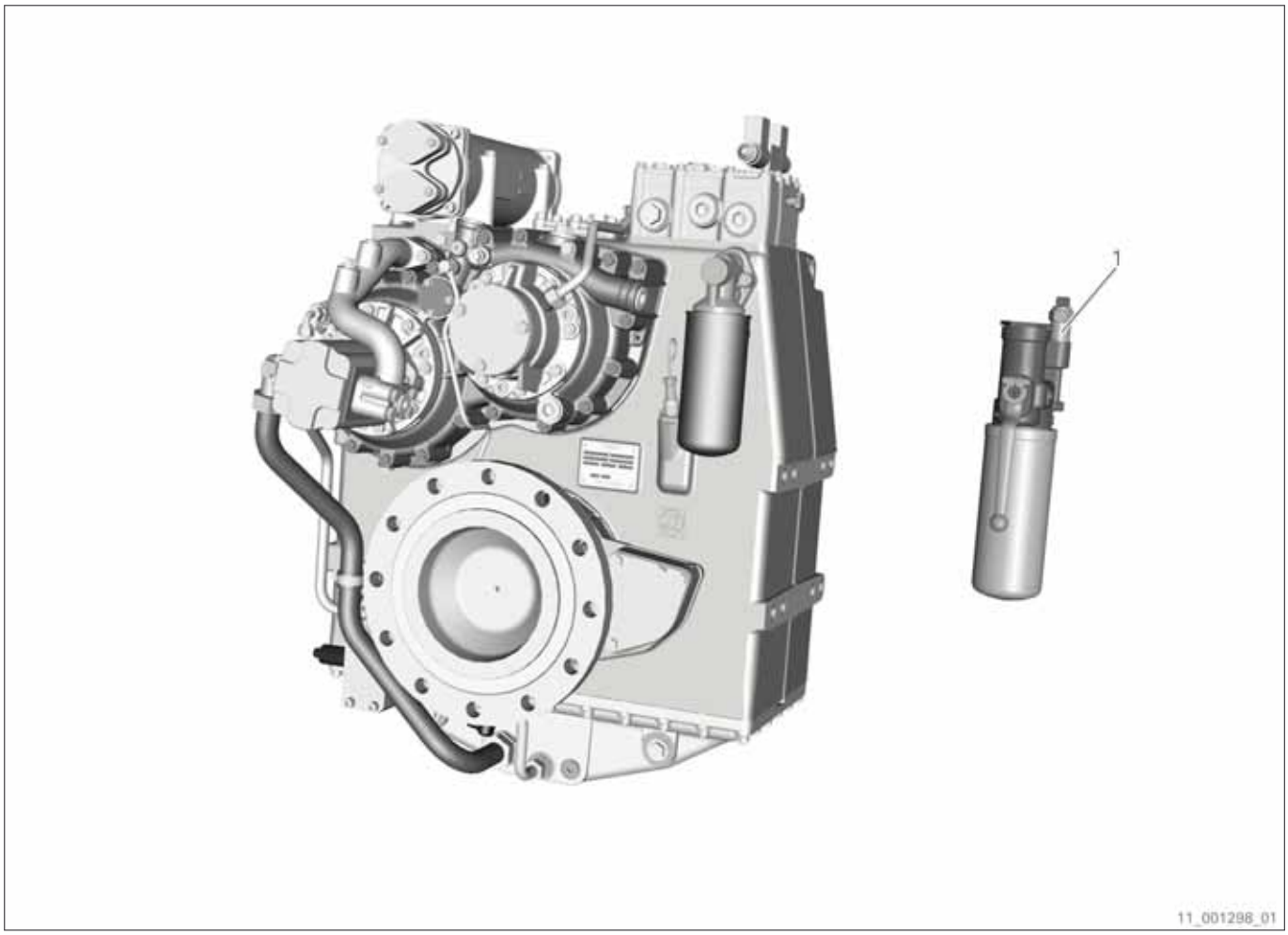

Fig. 72

1 Differential pressure switch (127), only available with transmissions approved by a classification society

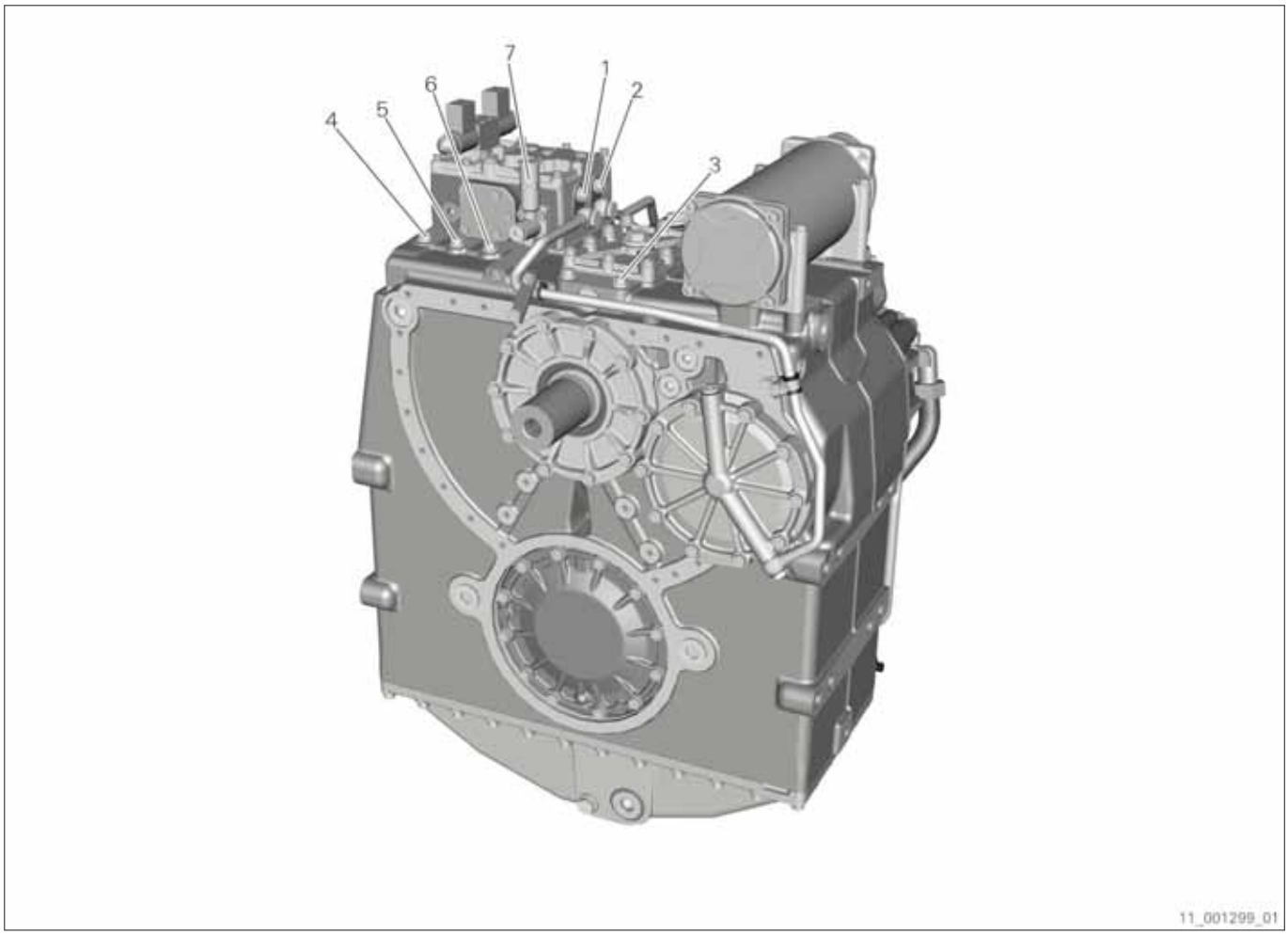

Fig. 73

1 Pressure switch for enginewise rotation (39)
2 Pressure switch for counter-rotation (38)
3 Measuring point for oil temperature downstream of transmission oil cooler (53)
4 Measuring point for clutch oil pressure (2)
5 Measuring point for clutch oil pressure (27)
6 Measuring point for clutch oil pressure (21)
7 Neutral switch (137)

3.12.4 ZF 3300 NC (enginewise rotation) family with aluminum housing

The digits in brackets refer to the marked positions in the installation drawing.

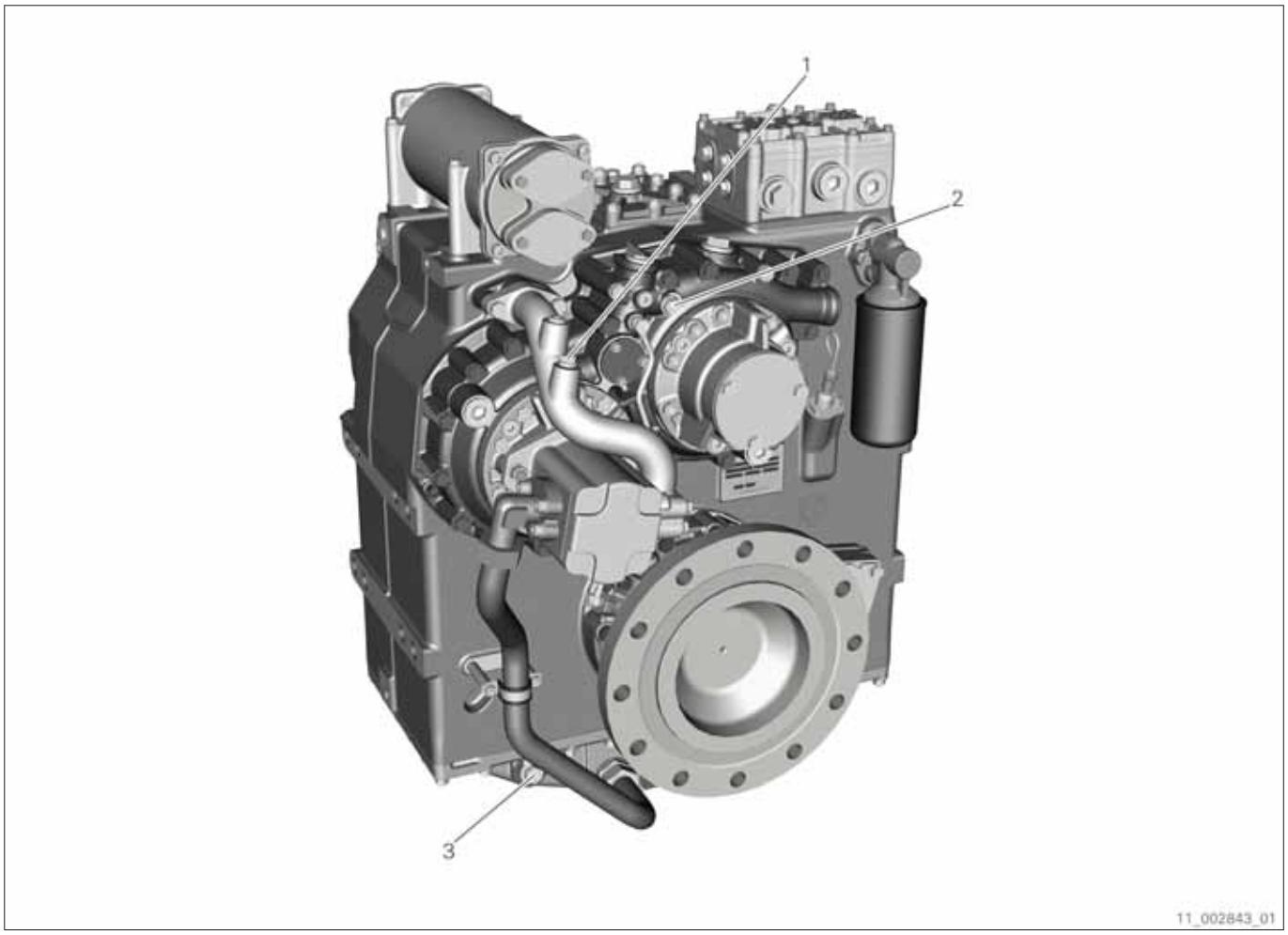

Fig. 74

1 Measuring point for oil sump temperature (41)
2 Measuring point for lubricating oil pressure (22)
3 Measuring point for oil sump temperature (11)

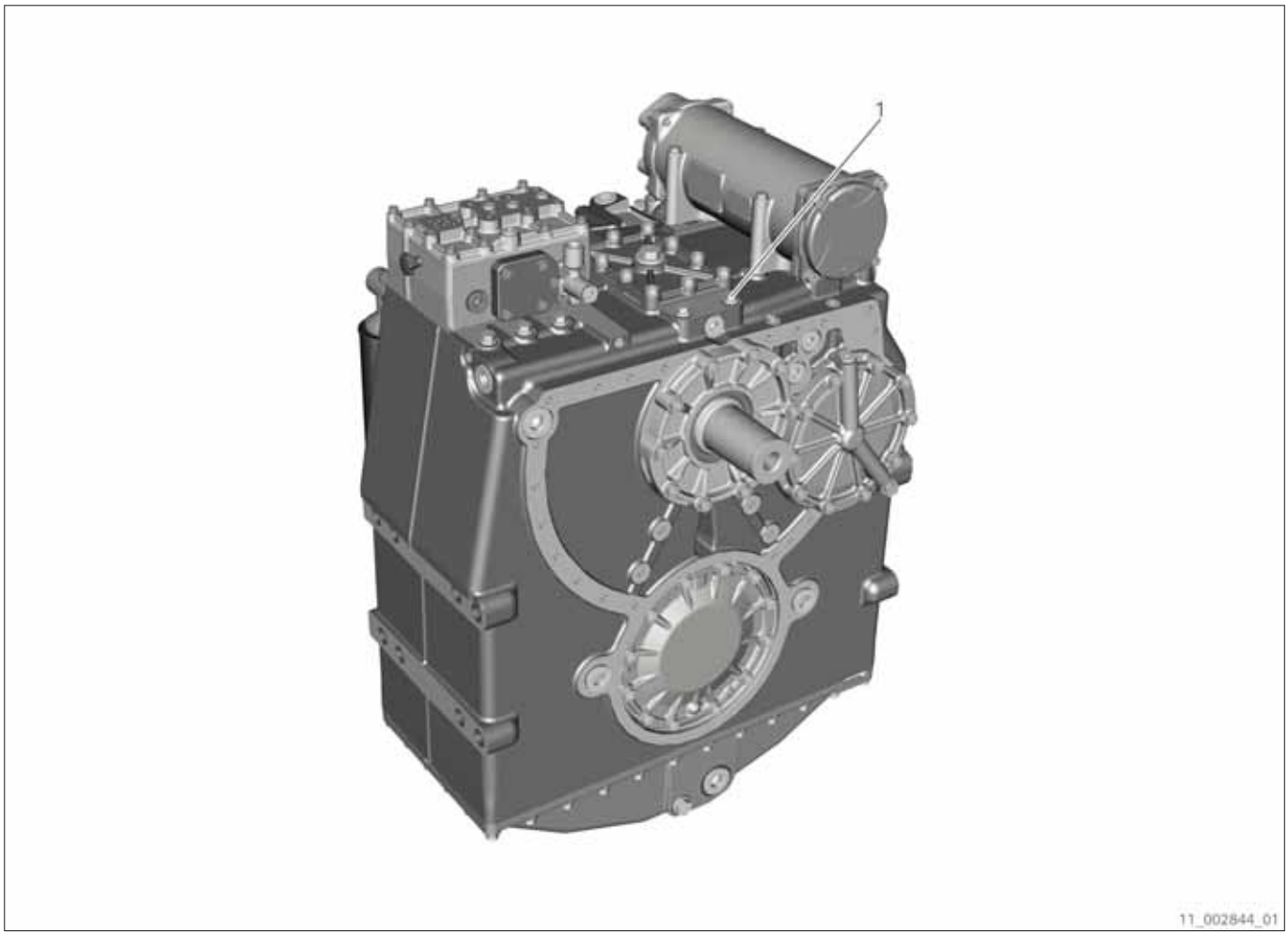

Fig. 75

1 Measuring point for oil temperature downstream of transmission oil cooler (53)

3.12.5 ZF 3300 family and ZF W3300 family with gray cast iron housing

The digits in brackets refer to the marked positions in the installation drawing.

The NR transmissions either have the measuring point (38) or the measuring point (39).

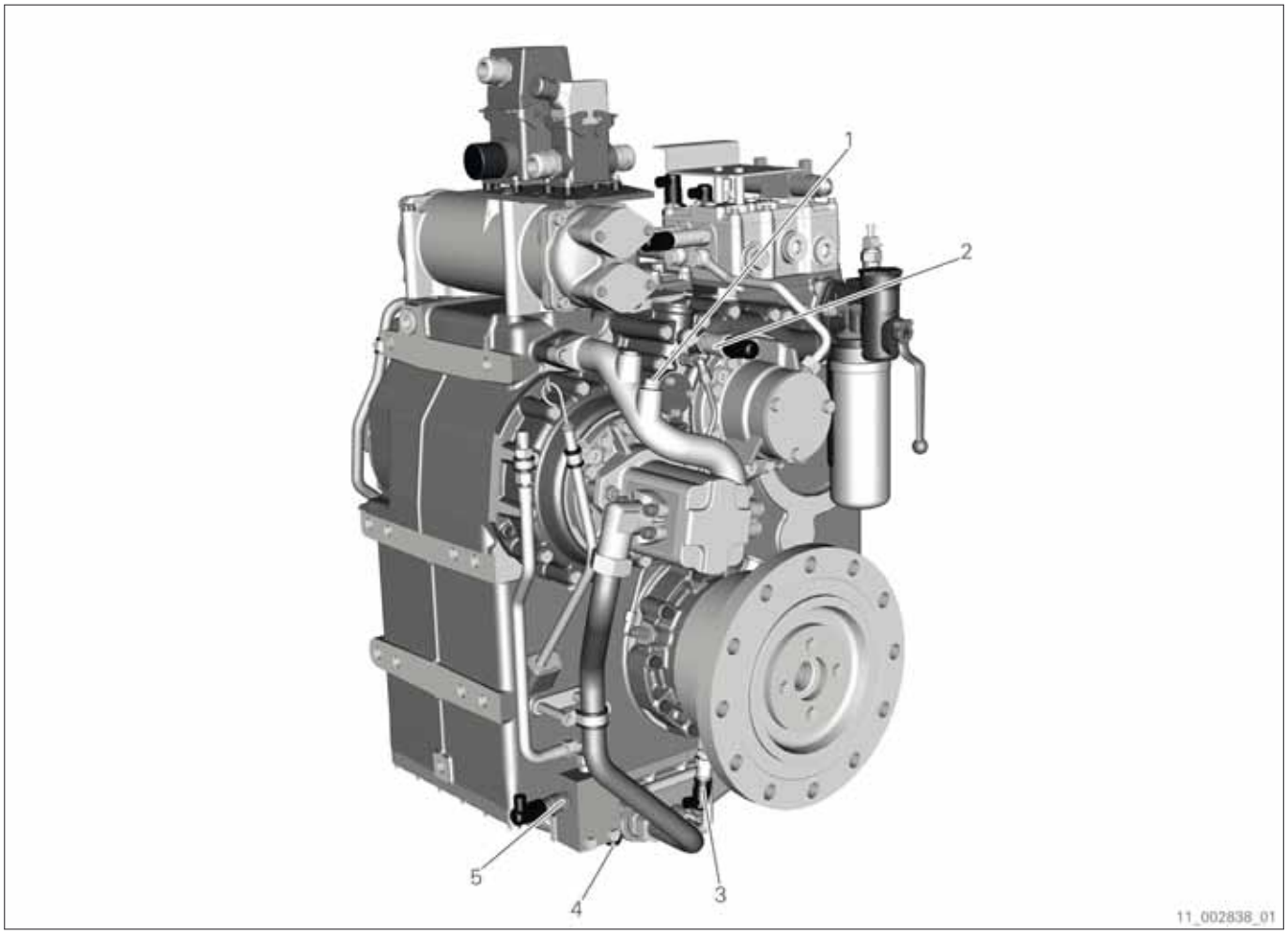

Fig. 76

1 Measuring point for oil sump temperature (41)
2 Measuring point for lubricating oil pressure (22)
3 Measuring point for thrust bearing temperature (128)
4 Measuring point for oil sump temperature (11)
5 Measuring point for oil level monitoring (171)

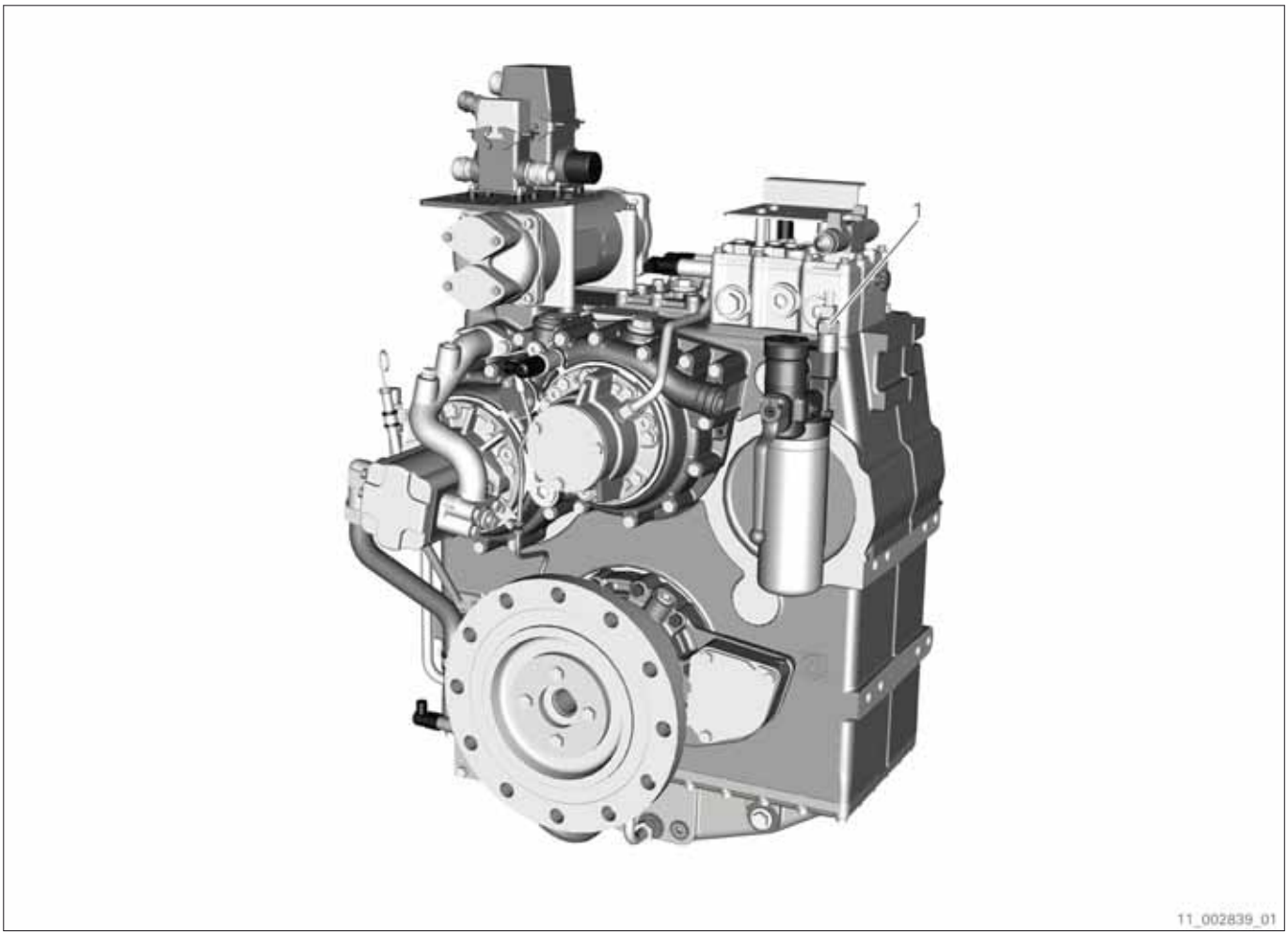

Fig. 77

1 Differential pressure switch (127), only available with transmissions approved by a classification society

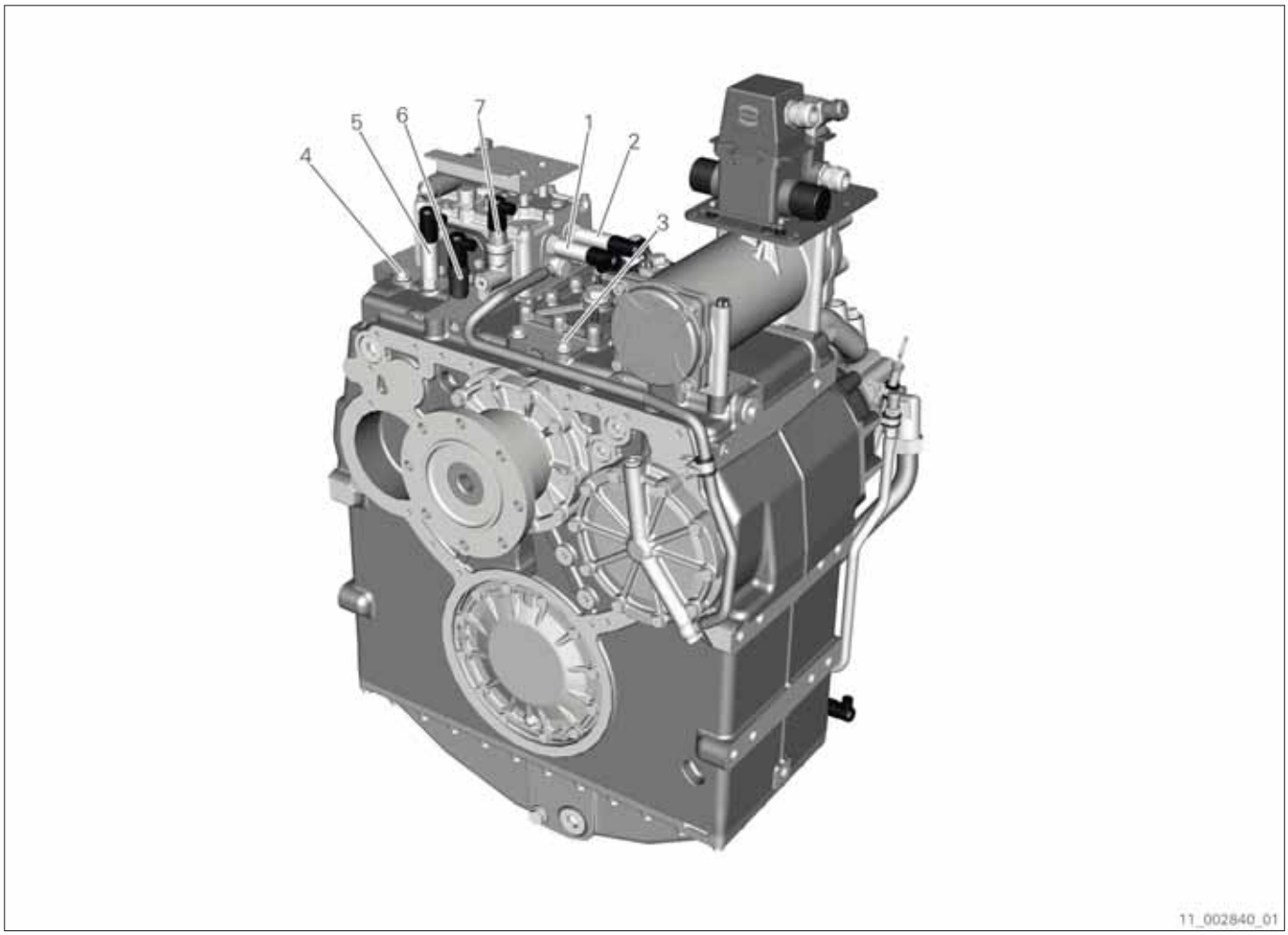

Fig. 78

1 Pressure switch for enginewise rotation (39)
2 Pressure switch for counter-rotation (38)
3 Measuring point for oil temperature downstream of transmission oil cooler (53)
4 Measuring point for clutch oil pressure (2)
5 Measuring point for clutch oil pressure (27)
6 Measuring point for clutch oil pressure (21)
7 Neutral switch (137)

3.12.6 ZF 3300 NC (counter-rotation) family and ZF W3300 NC (counter-rotation) family with gray cast iron housing

The digits in brackets refer to the marked positions in the installation drawing.

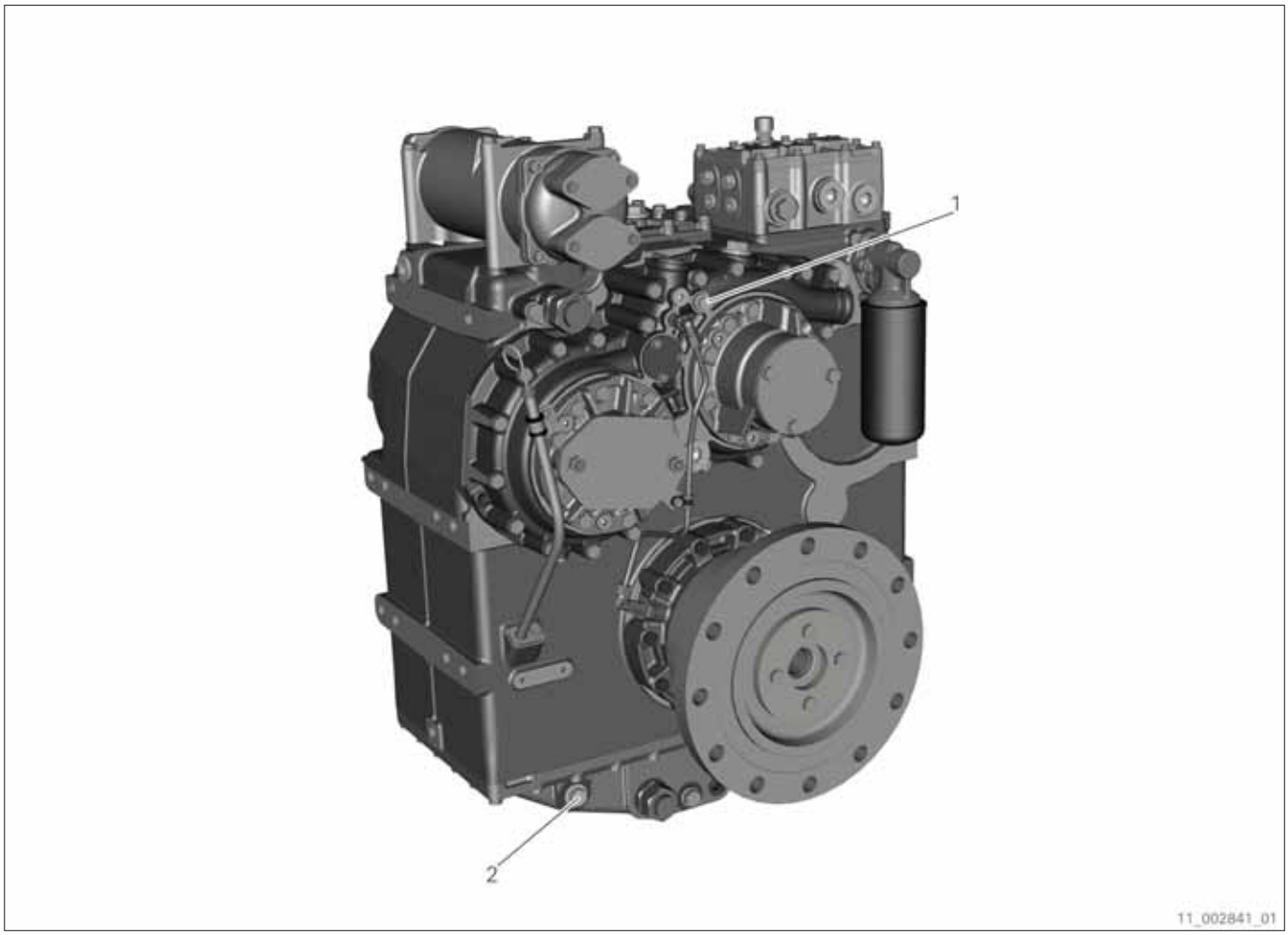

Fig. 79

1 Measuring point for lubricating oil pressure (22)

2 Measuring point for oil sump temperature (11)

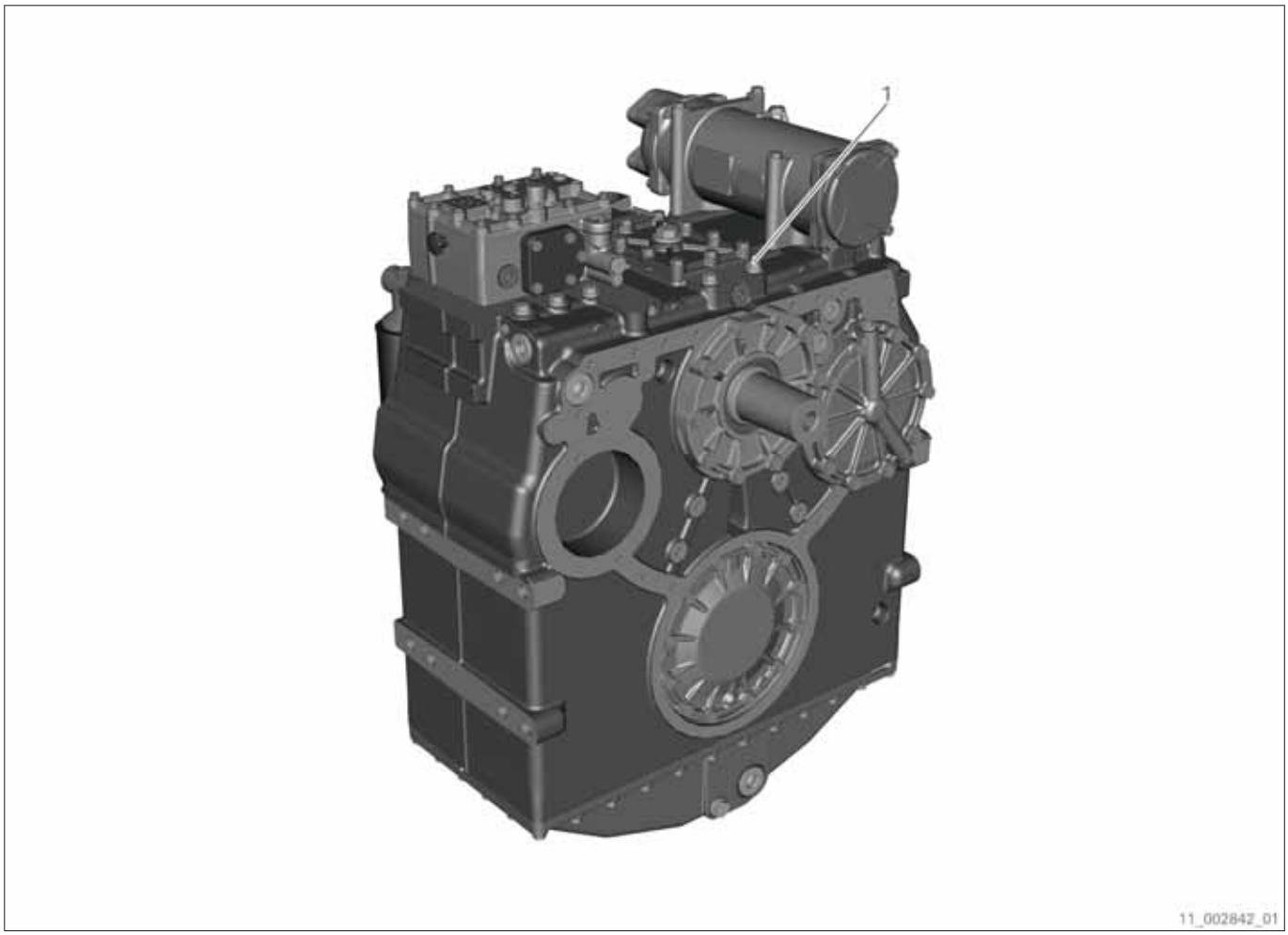

Fig. 80

1 Measuring point for oil temperature downstream of transmission oil cooler (53)

3.12.7 ZF 3300 family and ZF W3300 family with power take-in

The digits in brackets refer to the marked positions in the installation drawing.

The NR transmissions either have the measuring point (38) or the measuring point (39).

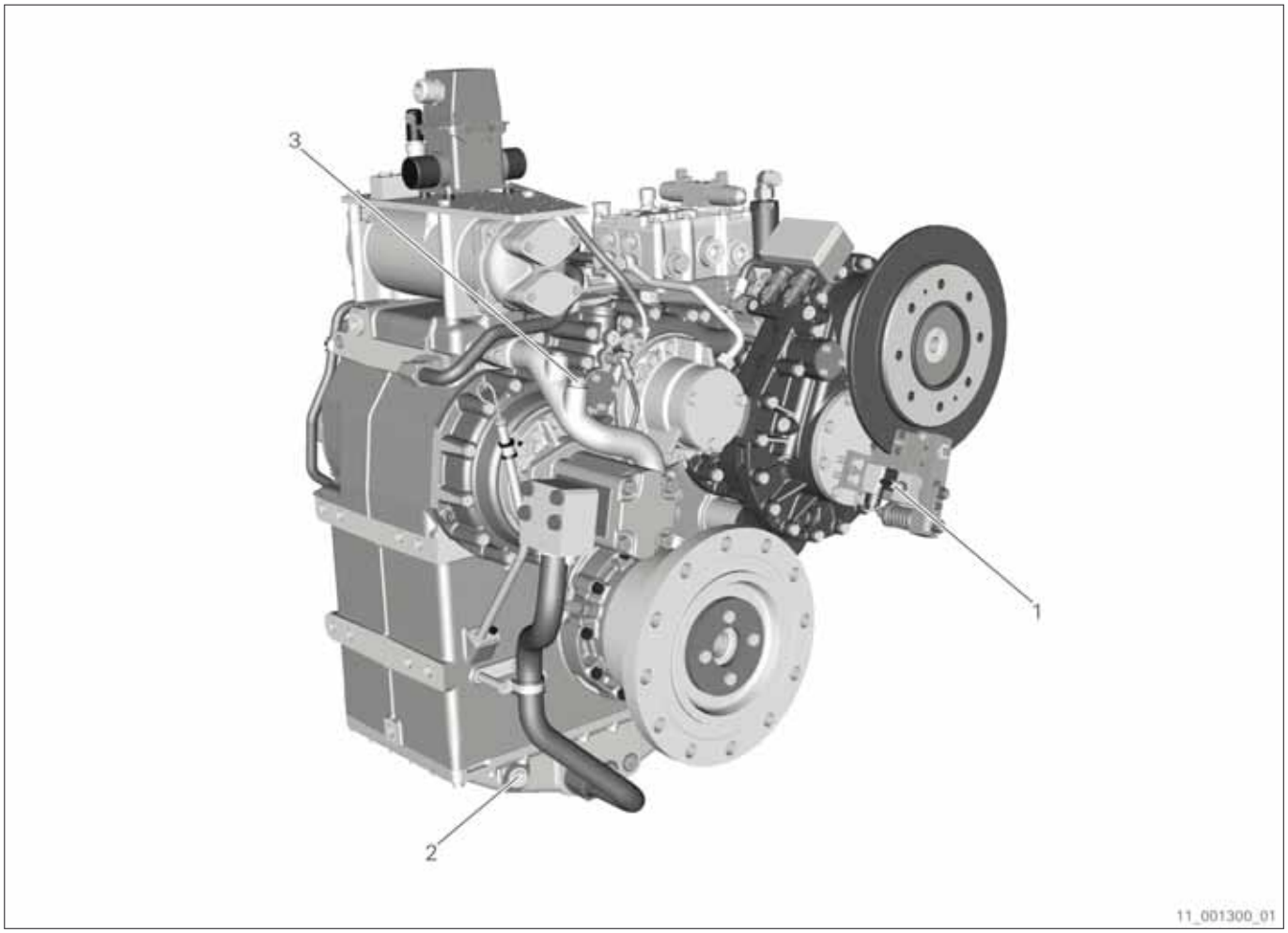

Fig. 81

1 Shift position indicator of power take-in brake (172)
2 Measuring point for oil sump temperature (11)
3 Measuring point for oil sump temperature (41)

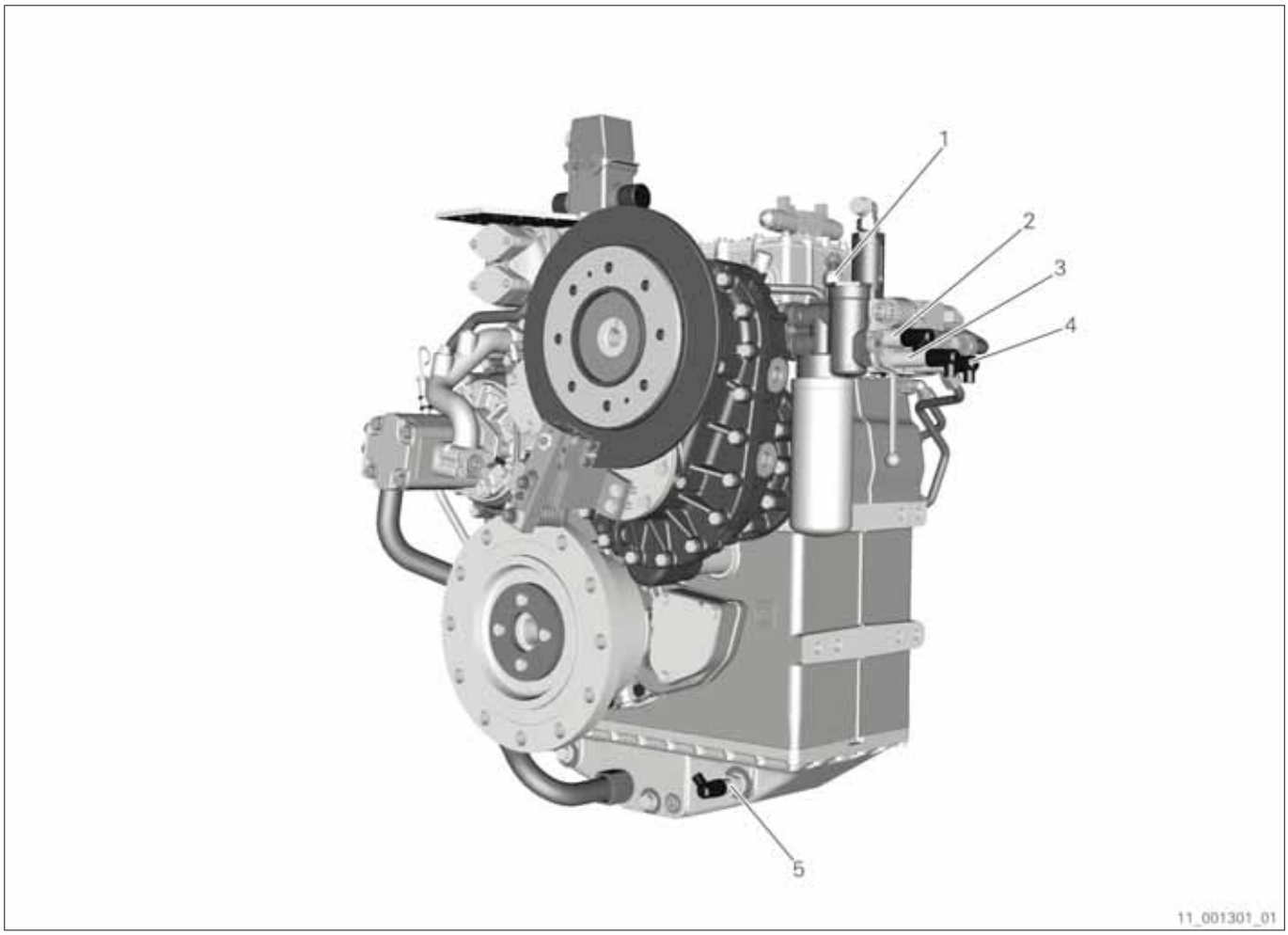

Fig. 82

1 Differential pressure switch (127), only available with transmissions approved by a classification society
2 Measuring point for clutch oil pressure of power take-in (266)
3 Measuring point for clutch oil pressure of power take-in (267)
4 Shift position indicator of power take-in clutch (155)
5 Measuring point for oil temperature during operation with power take-in (12)

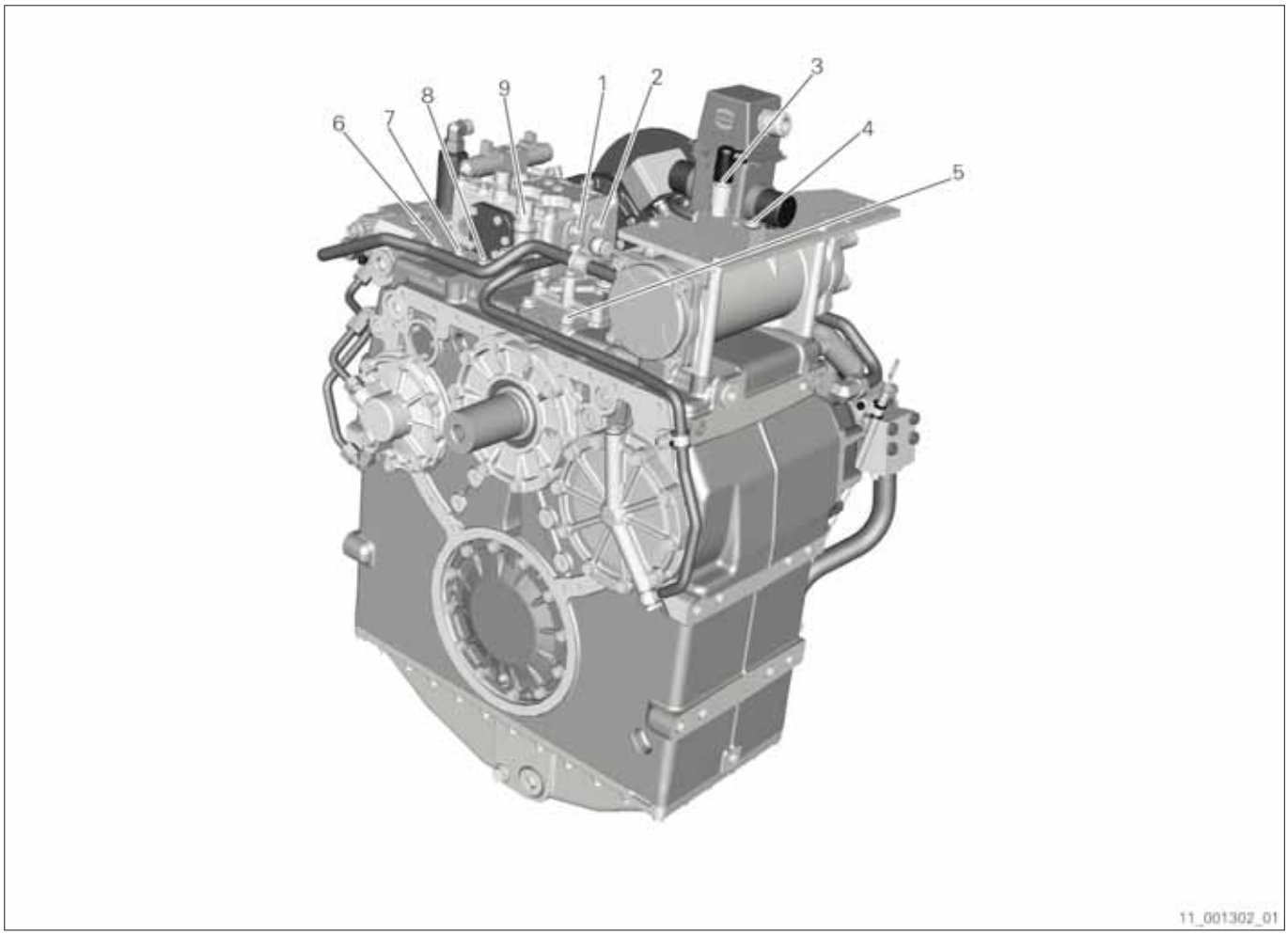

Fig. 83

1 Pressure switch for enginewise rotation (39)
2 Pressure switch for counter-rotation (38)
3 Measuring point for lubricating oil pressure during operation with power take-in (22B)
4 Measuring point for lubricating oil pressure (22)
5 Measuring point for oil temperature downstream of transmission oil cooler (53)
6 Measuring point for clutch oil pressure (2)
7 Measuring point for clutch oil pressure (27)
8 Measuring point for clutch oil pressure (21)
9 Neutral switch (137)

3.12.8 ZF 3300 family and ZF W3300 family with shaft brake

The digits in brackets refer to the marked positions in the installation drawing.

The NR transmissions either have the measuring point (38) or the measuring point (39).

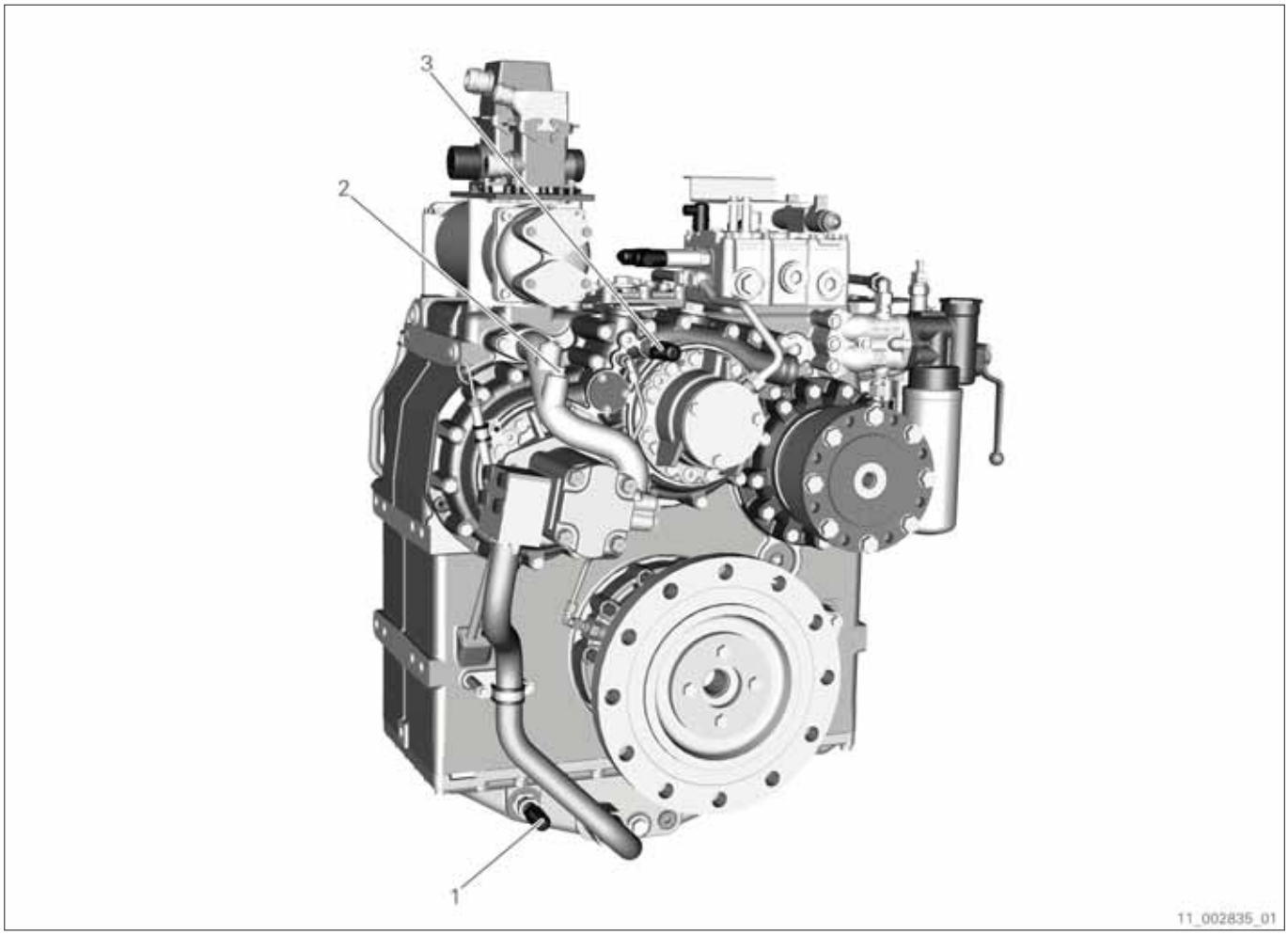

Fig. 84

1 Measuring point for oil sump temperature (11)
2 Measuring point for oil sump temperature (41)
3 Measuring point for lubricating oil pressure (22)

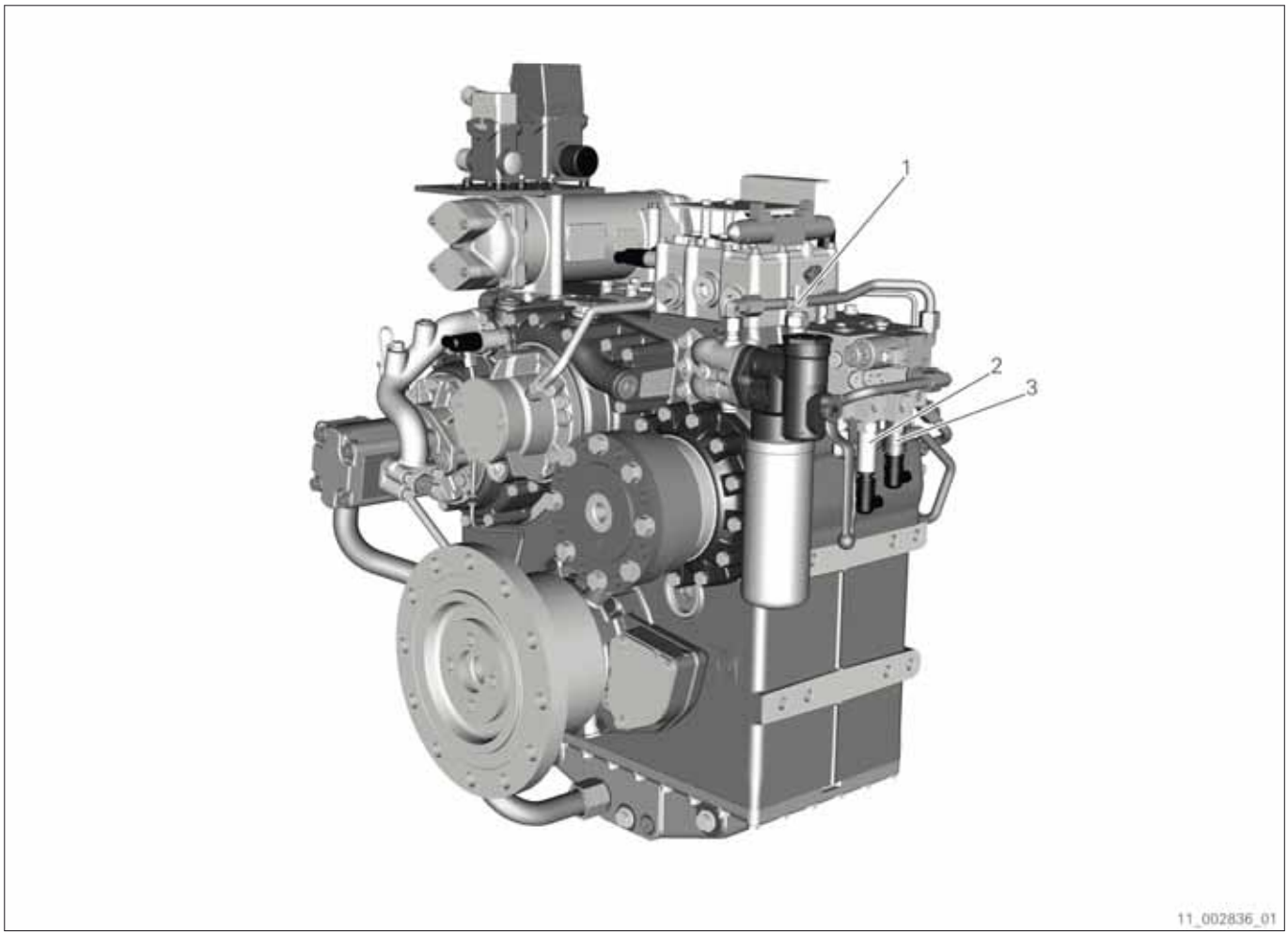

Fig. 85

1 Differential pressure switch (127), only available with transmissions approved by a classification society
2 Shift position indicator of shaft brake (172)
3 Measuring point for system oil pressure of shaft brake (272)

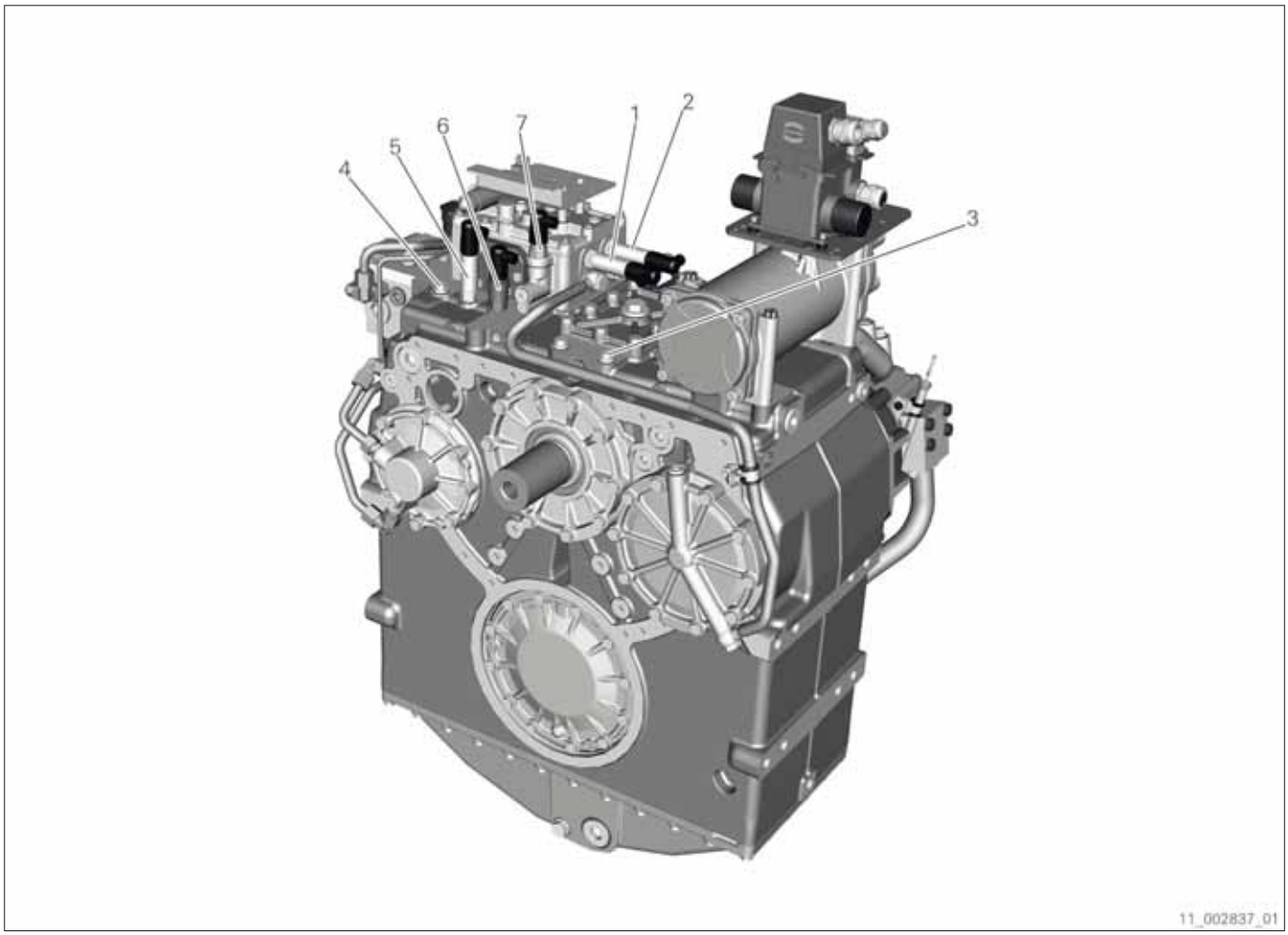

Fig. 86

1 Pressure switch for enginewise rotation (39)
2 Pressure switch for counter-rotation (38)
3 Measuring point for oil temperature downstream of transmission oil cooler (53)
4 Measuring point for clutch oil pressure (2)
5 Measuring point for clutch oil pressure (27)
6 Measuring point for clutch oil pressure (21)
7 Neutral switch (137)

3.12.9 ZF 3700 family and ZF W3700 family

The digits in brackets refer to the marked positions in the installation drawing.

The NR transmissions either have the measuring point (38) or the measuring point (39).

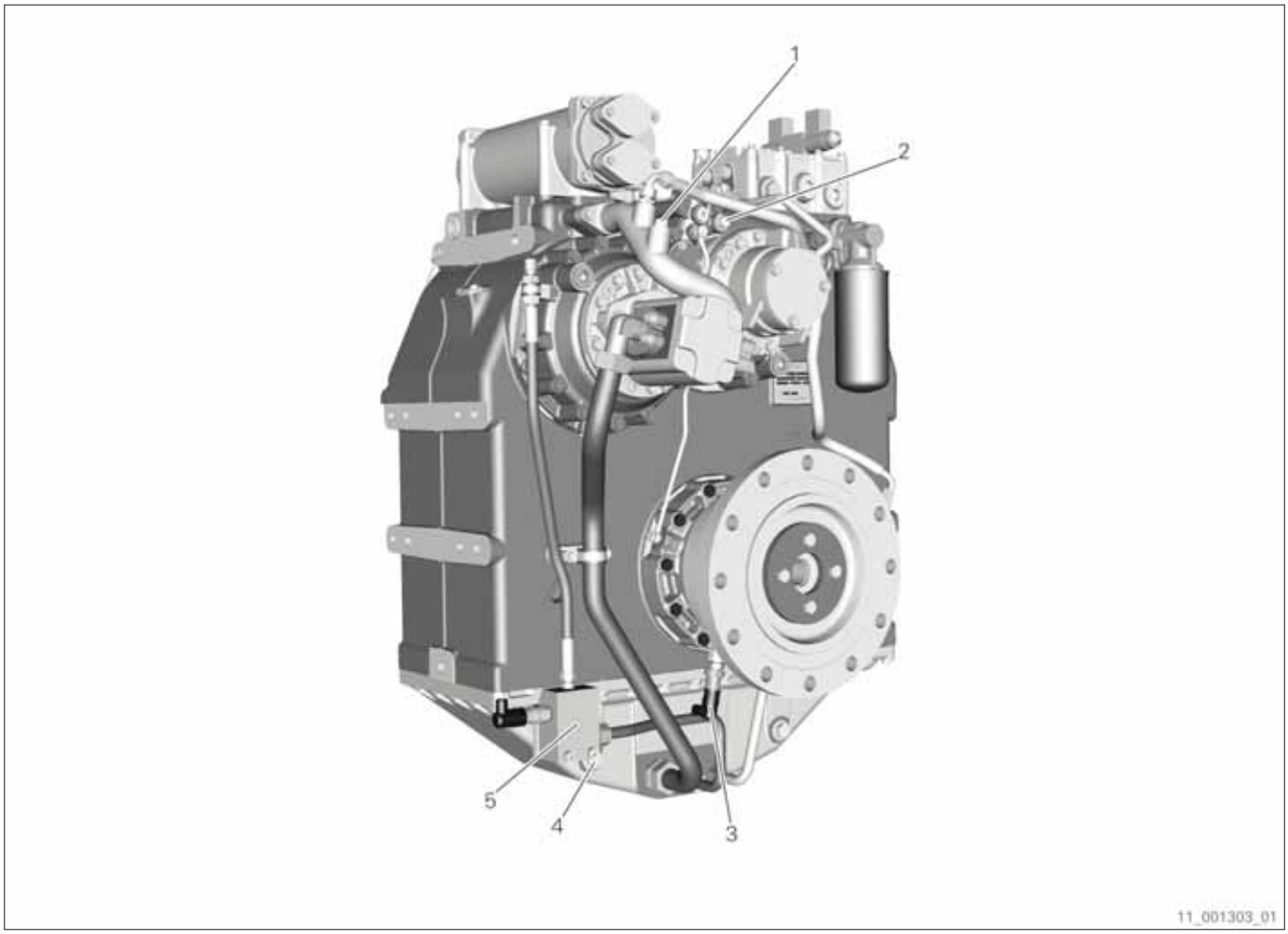

Fig. 87

1 Measuring point for oil sump temperature (41)
2 Measuring point for lubricating oil pressure (22)
3 Measuring point for thrust bearing temperature (128)
4 Measuring point for oil sump temperature (11)
5 Measuring point for oil level monitoring (171)

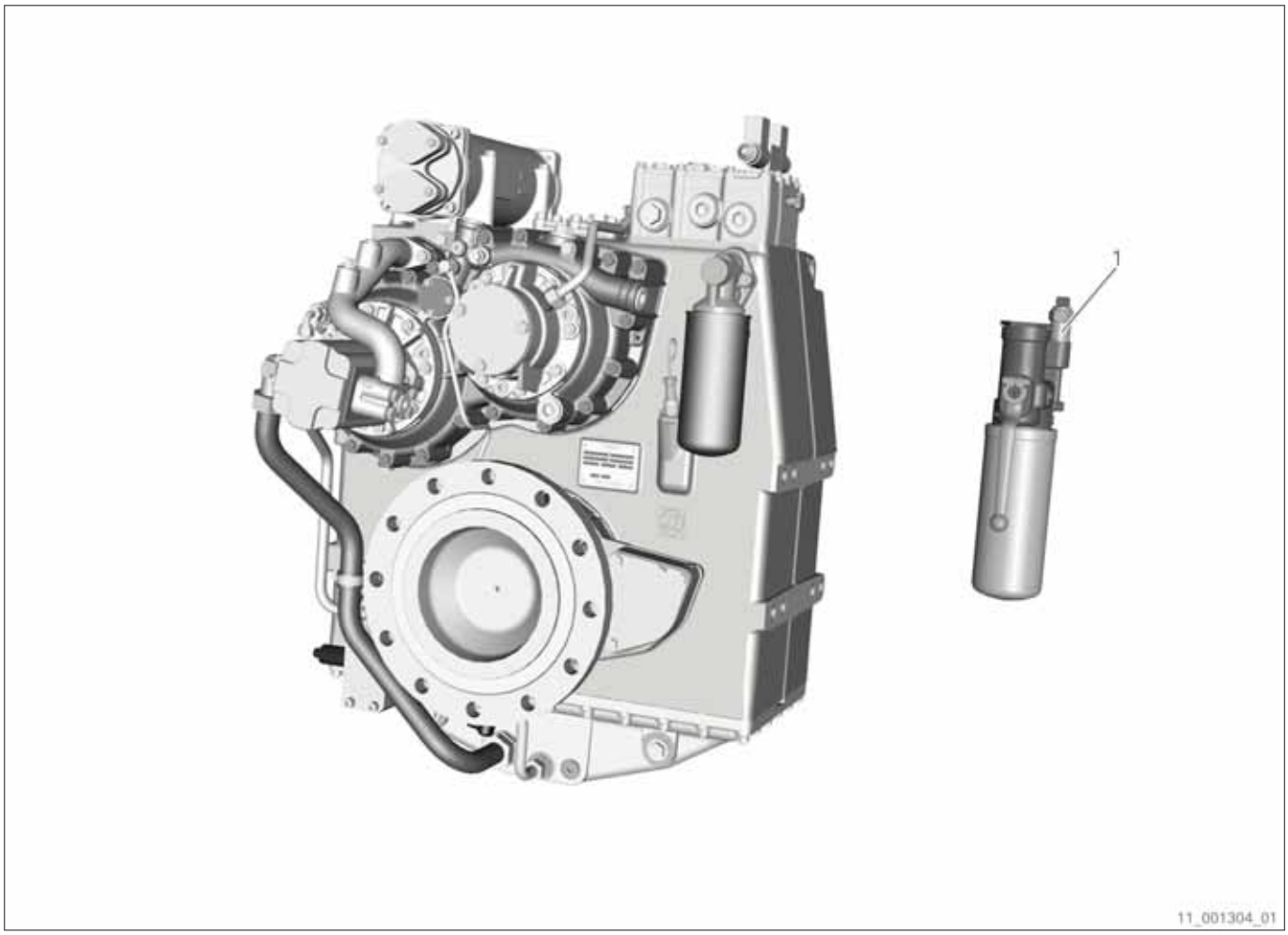

Fig. 88

1 Differential pressure switch (127), only available with transmissions approved by a classification society

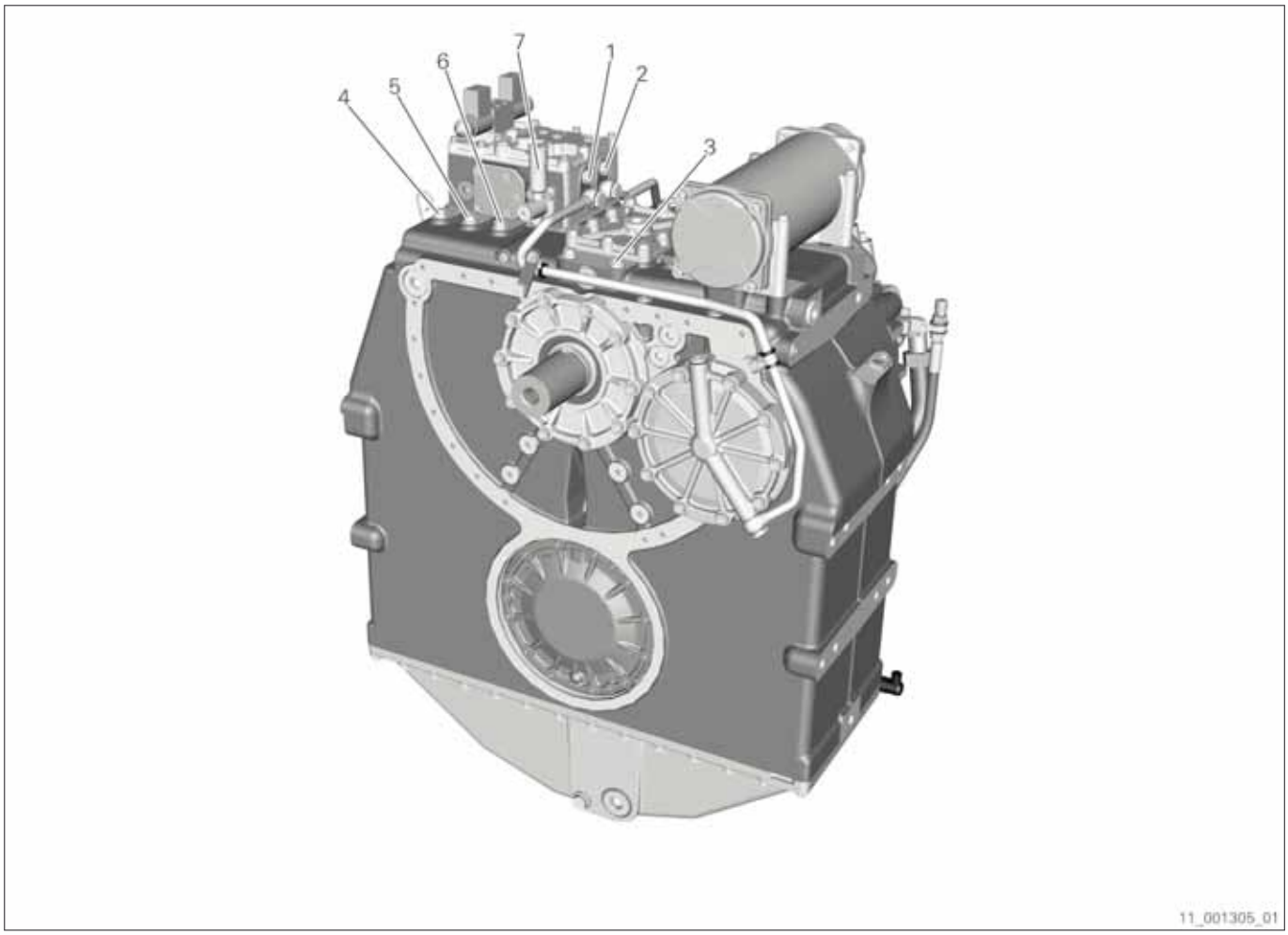

Fig. 89

1 Pressure switch for enginewise rotation (39)
2 Pressure switch for counter-rotation (38)
3 Measuring point for oil temperature downstream of transmission oil cooler (53)
4 Measuring point for clutch oil pressure (2)
5 Measuring point for clutch oil pressure (27)
6 Measuring point for clutch oil pressure (21)
7 Neutral switch (137)

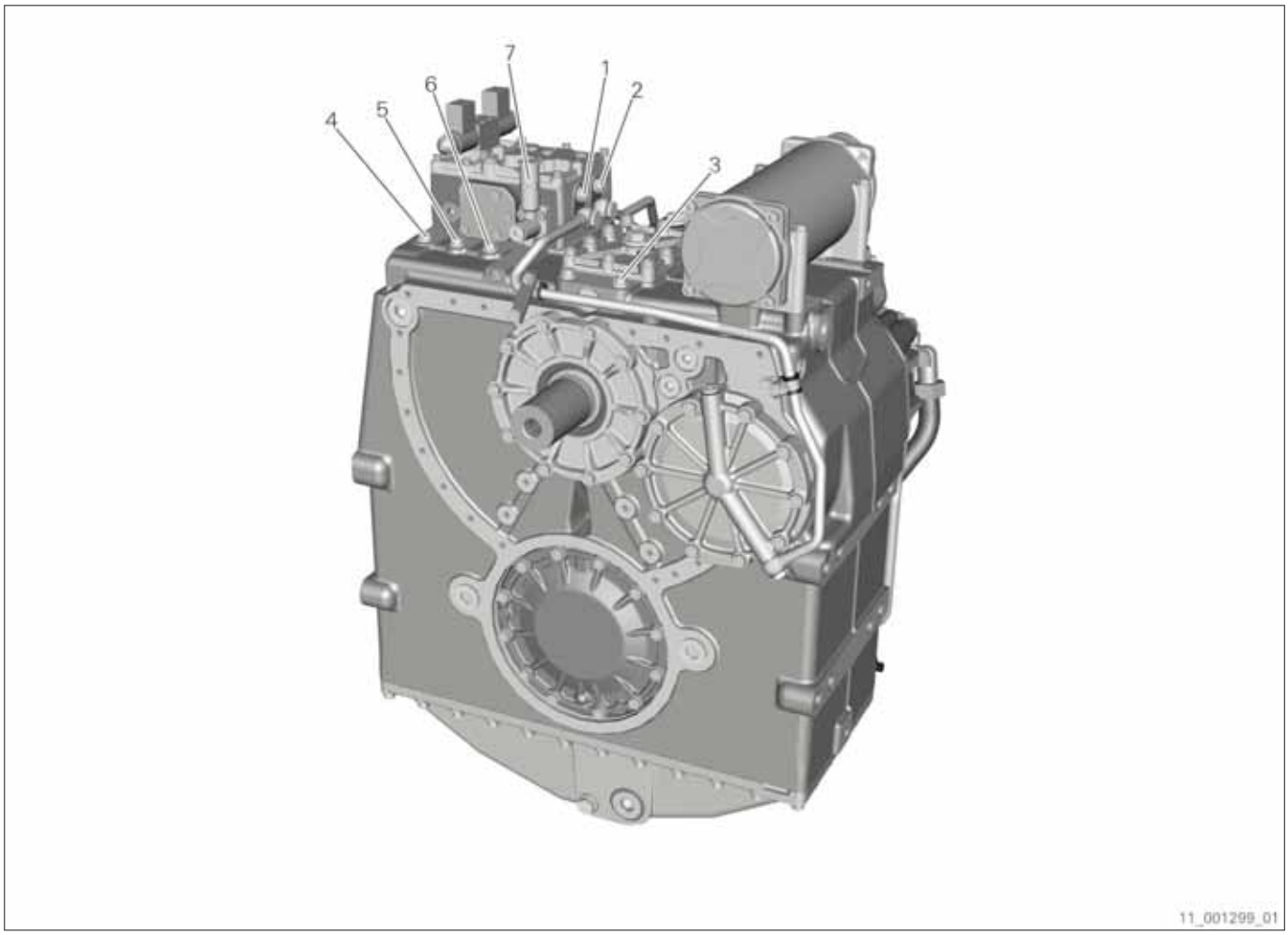

Fig. 90

1 Pressure switch for enginewise rotation (39)
2 Pressure switch for counter-rotation (38)
3 Measuring point for oil temperature downstream of transmission oil cooler (53)
4 Measuring point for clutch oil pressure (2)
5 Measuring point for clutch oil pressure (27)
6 Measuring point for clutch oil pressure (21)
7 Neutral switch (137)

3.12.10 Minimum transmission monitoring

The installation of the minimum transmission monitoring is essential for the assessment of the functional security of the transmission. Further display or warning equipment can be optionally connected to the measuring points sealed with blind plugs.

A higher transmission monitoring level is necessary on:

- Customer request
- Request of the classification society

3.12.10.1 Differential pressure switch (measuring point 127)

Differential pressure switch (127) is only available in transmissions approved by a classification society.

This measuring point serves to monitor filter soiling on the oil filter. Replace the filter cartridge in the event of an excessive differential pressure. A change-over filter with a fixed differential pressure switch is used with this transmission family. To ensure that a switchover of the change-over filter is possible during operation, a protective filter is installed in the oil filter head in the form of a wire mesh screen.

3.12.10.2 Clutch oil pressure (measuring point 2)

The clutch oil pressure is set to different levels depending on the transmission design or input torque. The nominal clutch pressure is specified in the binding technical documents for each order and is additionally struck into the type plate *(refer to section Transmission designation, page 184)*. The stipulated clutch oil pressure applies to the shift positions enginewise rotation or counter-rotation. Depending on the input speed and the oil temperature, the oil pressure drops at this measuring point when in the neutral shift position. The same applies to the clutch oil pressure in trolling mode. In order to monitor the clutch oil pressure, a manometer must be used at measuring point (2).

If there is not enough space to install the manometer at measuring point (2), it can alternatively be installed at measuring points (21) or (27).

If the clutch oil pressure under the given conditions corresponds to the stipulated values, the transmission lubrication is also ensured. Therefore, comprehensive monitoring as is provided with the clutch oil pressure is not provided for the lubricating oil pressure.

3.12.10.3 Oil sump temperature (measuring point 41)

The measuring point (41) is not located in the oil sump. Only use the measuring point for monitoring the oil temperature when oil is circulating in the event of a running engine or rotating propshaft with assembled trailing pump. In order to monitor the oil sump temperature, a thermometer must be used at measuring point (41). Set the water flow rate through the transmission oil cooler in such a manner that the oil temperature is within the recommended normal range during normal operation. Do not exceed the maximum oil temperature during continuous operation.

3.12.11 Additional transmission monitoring

A higher transmission monitoring level is necessary on:

- Customer request
- Request of the classification society

For this purpose, additional measuring points for an extended transmission monitoring are available on the transmission.

3.12.11.1 Clutch oil pressure (measuring point 21)

At the measuring point (21), a pressure sensor in conjunction with warning equipment is connected. When monitoring with a pressure sensor, set the pressure sensor in such a manner that the alarm is triggered if the pressure drops below the warning value. In the neutral shift position and when in trolling mode, the oil pressure drops below the pressure sensor trigger value. As a result, an alarm is triggered in the event of normal oil pressure in the neutral shift position and in trolling mode. To avoid triggering the alarm, take the warning equipment out of operation in the neutral shift position and in trolling mode. For instance, the warning equipment can be taken out of operation with a neutral switch controlled by the transmission actuation. To ensure that the alarm device does not respond in the time between the actuation of the control unit and the development of the full clutch oil pressure (approx. 3-4 s), additionally install a time delay relay with a delay time of 5-10 s in between.

If there is not enough space to install the pressure sensor at measuring point (21), it can alternatively be installed at measuring points (2) or (27).

3.12.11.2 Clutch oil pressure (measuring point 27)

At the measuring point (27), a pressure switch in conjunction with warning equipment is connected. When monitoring with a pressure switch, set the pressure switch in such a manner that the alarm is triggered if the pressure drops below the warning value. In the neutral shift position and when in trolling mode, the oil pressure drops below the pressure switch trigger value. As a result, an alarm is triggered in the event of normal oil pressure in the neutral shift position and in trolling mode. To avoid triggering the alarm, take the warning equipment out of operation in the neutral shift position and in trolling mode. For instance, the warning equipment can be taken out of operation with a neutral switch controlled by the transmission actuation. To ensure that the alarm device does not respond in the time between the actuation of the control unit and the development of the full clutch oil pressure (approx. 3-4 s), additionally install a time delay relay with a delay time of 5-10 s in between.

If there is not enough space to install the pressure switch at measuring point (27), it can alternatively be installed at measuring points (2) or (21).

3.12.11.3 Pressure switch for counter-rotation shift position (38)

The pressure switch (38) states whether the clutch is engaged for the counter-rotation shift position.

3.12.11.4 Pressure switch for enginewise rotation shift position (39)

The pressure switch (39) states whether the clutch is engaged for the enginewise rotation shift position.

3.12.11.5 Lubricating oil pressure (measuring point 22)

At the measuring point (22), a pressure sensor in conjunction with warning equipment is connected. When monitoring with a pressure sensor, set the pressure sensor in such a manner that the alarm is triggered if the pressure drops below the warning value. The lubricating oil pressure depends on the input speed and oil temperature.

3.12.11.6 Lubricating oil pressure (measuring point 22)

A pressure gauge is connected additionally to measuring point (22) for the ZF 3000 NC (counter-rotation) family. The lubricating oil pressure depends on the input speed and oil temperature.

3.12.11.7 Thrust bearing temperature (measuring point 128)

At the measuring point (128), the temperature on the propeller thrust bearing is monitored with a remote thermometer. Set the evaluation device of the temperature sensor to the warning value stipulated for the respective transmission design.

3.12.11.8 Level monitoring (measuring point 171)

The oil level is monitored at the measuring point (171).

3.12.11.9 Oil sump temperature (measuring point 11)

At the measuring point (11), a temperature sensor for a remote thermometer or for the warning equipment is installed. Set the evaluation device of the temperature sensor to the warning value stipulated for the respective transmission design.

3.12.11.10 Oil temperature downstream of transmission oil cooler (measuring point 53)

At the measuring point (53), a thermometer is connected. Set the water flow rate through the transmission oil cooler in such a manner that the oil temperature is within the recommended normal range during normal operation. Do not exceed the maximum oil temperature during continuous operation.

3.12.11.11 Neutral switch (137)

The neutral switch (137) states whether the control valve in the control unit is in the neutral shift position.

3.12.11.12 Clutch oil pressure of power take-in (measuring point 266)

The measuring point (266) is only available for transmission versions with a power take-in.

In order to monitor the clutch oil pressure in the power take-in , a pressure sensor at measuring point (266) must be used.

When monitoring with a pressure sensor, set the external evaluation device in such a manner that the alarm is triggered if the pressure drops below the warning value.

3.12.11.13 Clutch oil pressure of power take-in (measuring point 267)

The measuring point (267) is only available for transmission versions with a power take-in.

In order to additionally monitor the clutch oil pressure in the power take-in , a pressure switch at measuring point (267) must be used.

When monitoring with a pressure sensor, set the external evaluation device in such a manner that the alarm is triggered if the pressure drops below the warning value.

3.12.11.14 Lubricating oil pressure during operation with power take-in (measuring point 22B)

The measuring point (22B) is only available for transmission versions with a power take-in.

In order to monitor the lubricating oil pressure in the power take-in , a pressure sensor at measuring point (22B) must be used. The lubricating oil pressure depends on the input speed and oil temperature.

When monitoring with a pressure sensor, set the external evaluation device in such a manner that the alarm is triggered if the pressure drops below the warning value.

3.12.11.15 Oil temperature during operation with power take-in (measuring point 12)

The measuring point (12) is only available for transmission versions with a power take-in.

In order to monitor the oil temperature during operation with power take-in , use a temperature sensor for a remote thermometer or for the warning equipment. Set the evaluation device of the temperature sensor to the warning value stipulated for the respective transmission design. Do not exceed the maximum oil temperature during continuous operation.

3.12.11.16 Shift position indicator of power take-in clutch (155)

The shift position indicator (155) is only available for transmission versions with a power take-in.

The pressure switch (155) indicates, whether the clutch for the power take-in is closed.

3.12.11.17 Shift position indicator of power take-in brake (172)

The shift position indicator (172) is only available for transmission versions with a brake for the power take-in.

The proximity switch (172) indicates whether the brake for the power take-in is closed or open.

3.12.11.18 Shift position indicator of shaft brake (172)

The shift position indicator (172) is only available for transmission versions with a shaft brake.

The pressure switch (172) indicates whether the shaft brake is closed or open.

3.12.11.19 System oil pressure of shaft brake (measuring point 272)

Measuring point (272) is only available for transmission versions with a shaft brake.

A pressure sensor must be used at measuring point (272) to monitor the system oil pressure of the shaft brake.

When monitoring with a pressure sensor, set the external evaluation device in such a manner that the alarm is triggered if the pressure drops below the warning value.

3.13 Transmission cooling

In order to cool the oil, a transmission oil cooler consisting of a sea water resistant material is attached to the transmission housing. The transmission oil cooler is structured in a compact and lightweight construction method according to the tube bundle principle.

The heat generated in the transmission is discharged through the transmission oil cooler. To a lesser extent, the heat is also emitted via the housing surface.

The oil flows through the oil filter, into the transmission oil cooler and, finally, into the control unit. From the control unit, the oil flows to the multidisk clutches and the transmission lubrication points.

3.13.1 Cooling water circuit

3.13.1.1 Open cooling water circuit

With an open cooling water circuit, seawater flows through the transmission oil cooler as a cooling medium. If possible, design the lines in such a manner that, in the event of a stationary unit, either the feed line or the return line of the transmission oil cooler runs empty. Connect this line to the transmission oil cooler connection that is located lower down.

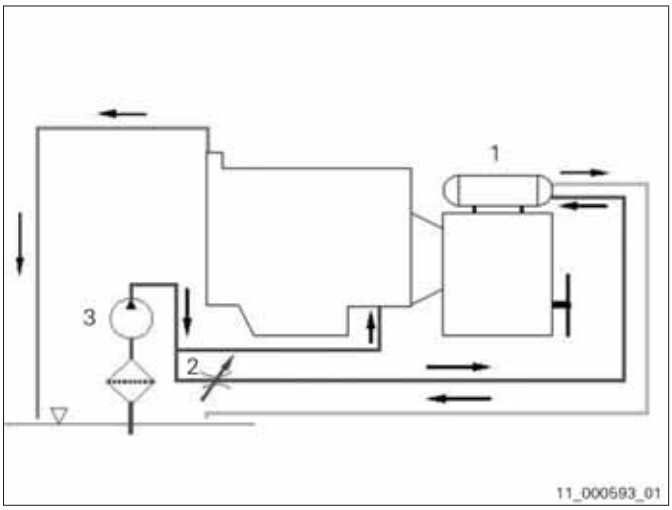

Fig. 91

1 Transmission oil cooler
2 Controlling system
3 Seawater pump

3.13.1.2 Closed cooling water circuit

With this arrangement, the cooling water circuit for the engine and the transmission is separated from the open cooling water circuit. The heat transfer from the engine cooling circuit and the transmission cooling circuit to the seawater takes place via a separate heat exchanger or via a surface cooler in the outer skin of the ship. The heat exchanger medium in the engine cooling circuit is usually a mixture of water and corrosion protection agent. Consequently, corrosion in the cooling system is largely reduced.

Due to the cleanliness of the medium, the transmission oil cooler is barely exposed to silting or pitting corrosion.

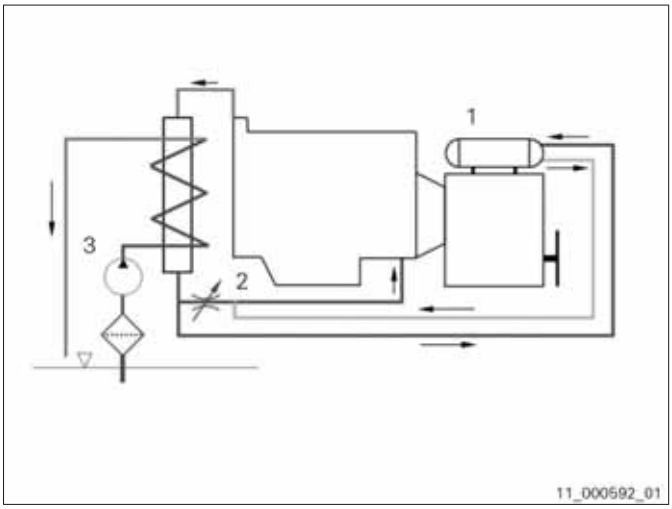

Fig. 92

1 Transmission oil cooler
2 Controlling system
3 Seawater pump

The closed cooling water circuit is preferable due to the clean cooling water.

3.13.2 Transmission oil cooler

3.13.2.1 Requirements for the cooling water circuit

The amount of heat generated in the transmission is discharged through the transmission oil cooler. The transmission oil cooler is part of the transmission basic design and is installed on the transmission housing. The permissible cooling water flow rate as well as the permissible pressure loss between the cooling water inlet and the cooling water outlet are stipulated in the transmission installation drawing and in the Technical Data *(refer to Chapter Technical Data, page 151)*.

Do not exceed the water pressure specified at the cooling water inlet.

The transmission oil cooler is designed in such a manner that, in the event of a maximum transmission ambient temperature and a water inlet temperature corresponding to the transmission installation drawing, a sufficient heat dissipation is ensured at full transmission load and maximum speed *(refer to Chapter Technical Data, page 151)*.

3.13.2.2 Arrangement of the transmission oil cooler in the cooling water circuit

The correct transmission temperature is set via the regulation of the cooling water flow rate. For this purpose, a replaceable orifice plate, a valve or similar component must be present in the line system. Therefore, the cooling water circuit belonging to the transmission oil cooler must be arranged in the shunt of the engine cooling water circuit.

3.13.2.3 Temperature

The maximum permissible cooling water inlet temperature is stipulated in the transmission installation drawing and in the Technical Data *(refer to Chapter Technical Data, page 151)*.

3.13.2.4 Flow rates

The maximum and minimum permissible cooling water flow rate is stipulated in the transmission installation drawing and in the Technical Data *(refer to Chapter Technical Data, page 151)*.

3.13.2.5 Water pressure

The maximum permissible water pressure at the cooling water inlet is stipulated in the transmission installation drawing and in the Technical Data *(refer to Chapter Technical Data, page 151)*.

3.13.2.6 Filtering

Use a suction filter on the water end in order to keep contaminants such as solid materials or mussels away from the transmission oil cooler and the tubes. The contaminants block the transmission oil cooler. A blocked transmission oil cooler or individual blocked cooler tubes lead to a reduced cooling capacity. The required flow speed is not achieved in the event of blocked cooler tubes. This leads to deposits or vegetation growth and, consequently, to pitting corrosion.

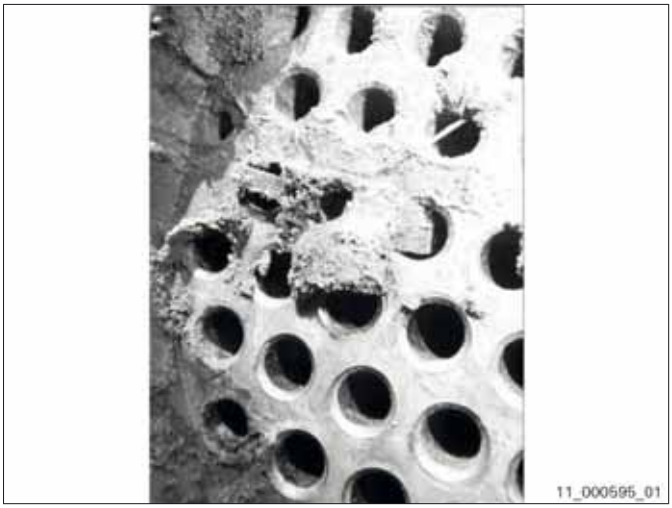

Fig. 93

A suction filter on the water end with a certain mesh size is required. The mesh size is stipulated in the transmission installation drawing.

3.13.2.7 Ground

3.13.2.7.1 Grounding with a freestanding transmission

In order to prevent galvanic corrosion, it is important that there is no electric potential difference in any components that come into contact with seawater. Therefore, the transmission and, consequently, the transmission oil cooler and all other components that come into contact with seawater must be connected to the grounding bus in an electrically conductive manner.

The connecting points of the ground strap must be free from paint or other electrically insulating materials.

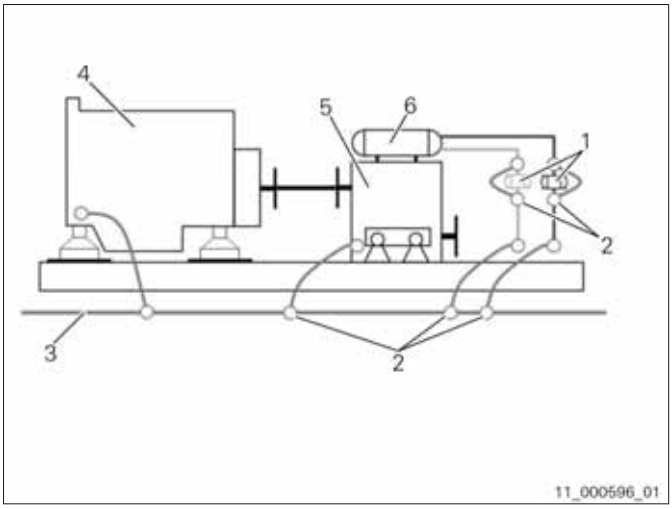

Fig. 94

1 Compensators
2 Copper ground cable with a minimum cross-section of 16 mm^2
3 Central ship ground line
4 Engine
5 Transmission
6 Transmission oil cooler

3.13.2.7.2 Grounding with a flange-mounted transmission

In order to prevent galvanic corrosion, it is important that there is no electric potential difference in any components that come into contact with seawater. Therefore, the transmission and, consequently, the transmission oil cooler and all other components that come into contact with seawater must be connected to the grounding bus in an electrically conductive manner.

The connecting points of the ground strap must be free from paint or other electrically insulating materials.

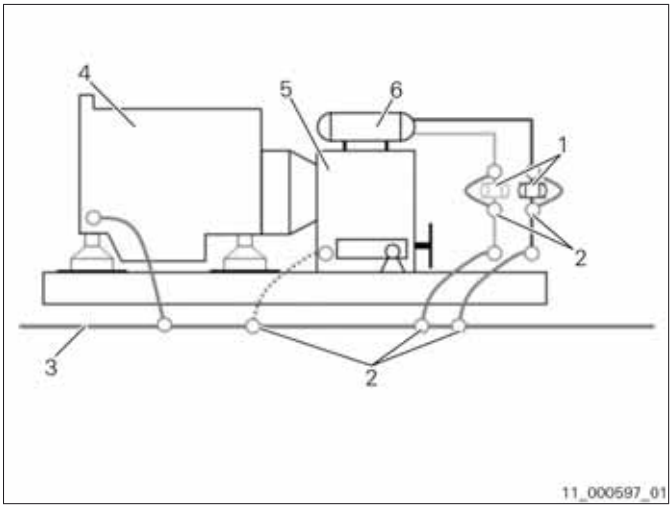

Fig. 95

1 Compensators
2 Copper ground cable with a minimum cross-section of 16 mm^2
3 Central ship ground line
4 Engine
5 Transmissions
6 Transmission oil cooler

3.13.2.8 Draining the transmission oil cooler

If possible, design the open cooling water circuit in such a manner that the transmission oil cooler is automatically drained when the cooling water pump is stationary.

The bacteria in standing cooling water produce degradation products that deposit in the transmission oil cooler. For a non-passivated surface, this leads to pitting corrosion in the transmission oil cooler. The passivation of the surfaces is only established after a certain operating period in oxygen-rich water.

If the unit is taken out of operation for an extended period of time, drain the water when the cooling water circuit is open *(refer to section Work prior to decommissioning or prior to an extended downtime, page 296)*.

The draining is only required if the transmission oil cooler is not automatically drained when the cooling water pump is stationary.

A drain screw or a drain cock must be installed in the tube in order to ensure that the cooling water circuit can be drained. The connection must be lower than the transmission oil cooler to ensure that the transmission oil cooler is able to fully drain.

3.13.2.9 Free space for maintenance work

Do maintenance at the transmission oil cooler at regular intervals *(refer to Section Maintenance work 169: Visually inspecting and cleaning the transmission oil cooler)*.

For this purpose, provide suitable free space for the removal of the tube bundle.

The free space for the maintenance work is stipulated in the transmission installation drawing.

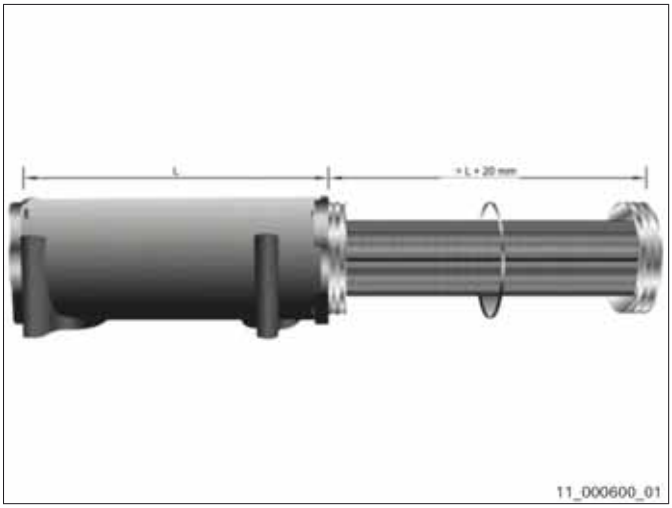

Fig. 96

3.13.3 Tubing

3.13.3.1 Installation

All necessary oil tubes for the components securely installed in the transmission are securely connected and ready for operation. The connections for the cooling water inlet and cooling water outlet are sealed with flanges on delivery. Further information can be found in the respective transmission installation drawing. The flanges can be used as welding flanges when installing the cooling water line. For decoupling purposes, a flexible intermediate piece, e.g. a compensator or a piece of hose, is placed between these flanges and the cooling water tubing on the ship end. The exact position of the

connections is stipulated in the respective transmission installation drawing. Adhere to the cooling water flow direction. Do not mix up cooling water inlet and cooling water outlet.

The temperature increase of the cooling water in the transmission oil cooler depends on the engine power and the cooling water flow rate.

The mixing temperature for the engine cooling circuit rises by approx. 0.5°C and is therefore insignificant. The stipulated maximum cooling water flow rate through the transmission oil cooler shall not be exceeded as there is otherwise a risk of cavitation in the transmission oil cooler.

Do not fall below the minimum cooling water flow rate. In the event of insufficient flow speed, there is a risk that the transmission oil cooler will be prematurely subject to silting or that the cooling water flow will be impaired due to salt precipitation.

This figure illustrates organic deposits on the tube bundle caused by a low flow speed and a long downtime.

Fig. 97

3.13.3.2 Screwed socket

3.13.3.2.1 Length of thread engagement

The maximum permissible length of thread engagement in the connection threads for the cooling water must be observed to prevent blocking the flow in the upstream area of the tube plates.

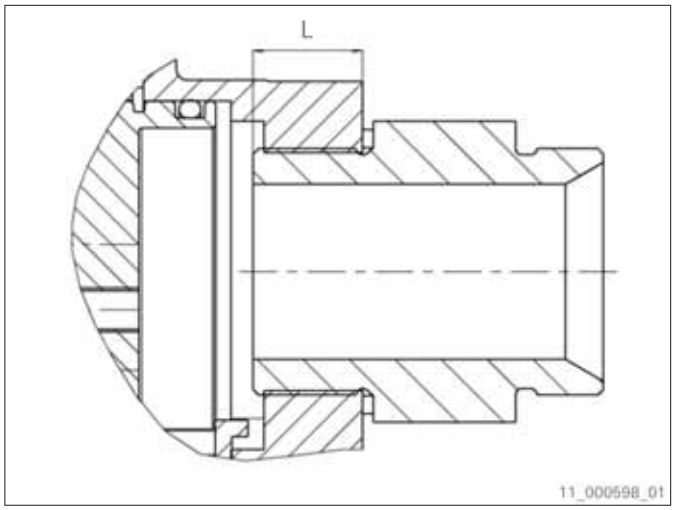

Fig. 98

L Maximum length of thread engagement

Transmission type	Maximum length of thread engagement L
ZF 3000, ZF 3050, ZF 3055, ZF 3060, ZF 3070, ZF 3000 NR, ZF 3050 NR, ZF 3055 NR, ZF 3060 NR, ZF 3070 NR	18 mm
ZF 3000 A, ZF 3050 A, ZF 3055 A, ZF 3060 A, ZF 3150 A, ZF 3160 A, ZF 3000 NRA, ZF 3050 NRA, ZF 3055 NRA, ZF 3060 NRA, ZF 3150 NRA, ZF 3160 NRA	18 mm
ZF 3070 A, ZF 3170 A, ZF 3070 NRA, ZF 3170 NRA	18 mm
ZF 3000 V, ZF 3050 V, ZF 3055 V, ZF 3060 V, ZF 3070 V, ZF 3000 NRV, ZF 3050 NRV, ZF 3055 NRV, ZF 3060 NRV, ZF 3070 NRV	18 mm
ZF 3050 D, ZF 3055 D, ZF 3060 D	18 mm
ZF 3311, ZF 3351, ZF 3356, ZF 3361, ZF W3310, ZF W3350, ZF W3355, ZF 3311 NR, ZF 3351 NR, ZF 3356 NR, ZF 3361 NR, ZF W3310 NR, ZF W3350 NR, ZF W3355 NR	18 mm
ZF 3311 NC, ZF 3351 NC, ZF 3356 NC, ZF 3361 NC, ZF W3310 NC, ZF W3350 NC, ZF W3355 NC with counter-rotation direction	18 mm
ZF 3311, ZF 3351, ZF 3356, ZF 3361, ZF W3310, ZF W3350, ZF W3355, ZF 3311 NR, ZF 3351 NR, ZF 3356 NR, ZF 3361 NR, ZF W3310 NR, ZF W3350 NR, ZF W3355 NR with power take-in	18 mm
ZF 3311, ZF 3351, ZF 3356, ZF 3361, ZF W3310, ZF W3350, ZF W3355, ZF 3311 NR, ZF 3351 NR, ZF 3356 NR, ZF 3361 NR, ZF W3310 NR, ZF W3350 NR, ZF W3355 NR with shaft brake	18 mm
ZF 3310, ZF 3350, ZF 3355, ZF 3360, ZF 3310 NR, ZF 3350 NR, ZF 3355 NR, ZF 3360 NR	18 mm
ZF 3310 NC, ZF 3350 NC, ZF 3355 NC, ZF 3360 NC with enginewise rotation direction	20 mm
ZF 3370, ZF 3370 NR	18 mm
ZF 3711, ZF 3751, ZF 3756, ZF 3761, ZF W3710, ZF W3750, ZF W3755, ZF 3711 NR, ZF 3751 NR, ZF 3756 NR, ZF 3761 NR, ZF W3710 NR, ZF W3750 NR, ZF W3755 NR	18 mm

Tab. 2 Maximum length of thread engagement

3.13.3.3 Materials for cooling water lines

When selecting the materials for the cooling water lines, consider that different materials may not be combined as desired. If a noble metal is installed with a base metal, the base metal will corrode.

Material for tubes and shut-off vales in the open cooling water circuit:

- Copper alloy, e.g. CuNi10Fe1Mn

Galvanized steel tubes may not be used as there is a risk of a galvanic reaction. The zinc layer is partially removed by galvanic processes. At the same time, iron corrosion parts deposit on washers or flange tubes belonging to the transmission oil cooler. As a result of pitting corrosion, this galvanic reaction quickly leads to transmission oil cooler damage.

3.13.3.4 Grounding for cooling water lines

To ensure the prevention of galvanic corrosion, it is important that there is no electric potential difference on any components that come into contact with seawater. Therefore, connect all cooling water lines to the grounding bus in an electrically conductive manner. In the event of an insulating parting point in the tube,

e.g. a hose or a compensator, bridge the insulating parting point with a ground cable in an electrically conductive manner *(refer to section Ground, page 124)*.

3.14 Installation

During the project planning of the power transmission system, ensure that sufficient free space is available to remove the transmission oil cooler, oil filter, oil pump, transmission clutch and the clutch disks as well as to pull out the oil dipstick. The spaces for removing are stipulated in the transmission installation drawings. It is possible to remove the transmission clutch and the clutch disks while the transmission is installed. The oil drain plugs must also be easily accessible. ZF Friedrichshafen AG recommends installing a fixed suction pipe on the transmission in place of the oil drain plug if there is insufficient space for a collection trough beneath the oil drain holes. In this case, suck off the oil during the oil change.

The screws belonging to the mechanical emergency control must be accessible so that the respective multidisk clutch can be closed by hand. The free spaces required for this purpose are stipulated in the transmission installation drawings.

As a manufacturer of an individual component of a ship propulsion system, ZF Friedrichshafen AG is not responsible for vibrations or vibration problems that occur in this ship propulsion system.
ZF Friedrichshafen AG assumes no responsibility for transmission noises or transmission damage to the torsionally flexible coupling or other parts of the driveline caused by such vibrations.

ZF Friedrichshafen AG recommends performing a torsional vibration calculation and also including unloaded transmission parts in the calculation. The permissible installation position in the ship is stipulated in the transmission installation documents. The transmission installation documents apply for the transmission delivery order.

The customer must implement the following screw connections and design them for the respective loads:

- Between supporting surfaces and ship foundation
- Between torsionally flexible coupling and engine
- Between torsionally flexible coupling and generator
- Between torsionally flexible coupling and transmission
- Between propshaft and transmission

The following protection devices for rotating and moving parts must be present:

- On the output flange
- On the PTO flanges
- On the PTI shaft brake
- On the torsionally flexible coupling
- On the engine flywheel and the input shaft

3.14.1 Transmission installation

Observe the following points:

- Protect the transmission against damage, moisture and dirt.
- Do not subject the housing, input shaft and output shaft to high axial forces.
- Avoid severe jolts and shocks.
- Flexibly fasten lubrication and cooling lines.

  The tubing and the fastenings for the supply of the transmission oil cooler, the standby pump and the oil pump for the power take-in must be supplied by the shipyard. The fastenings must be free from vibration loads.
- Clean tubing and connections. Tubing and connections must be free from annealing chips and welding beads.
- Remove corrosion protection oil from the following transmission parts:
  - Supporting surfaces for the foundation screw connection of the transmission
  - Stopper surfaces
  - Input shaft
  - Output flange
  - Tube connection surfaces
  - PTO connections

  The cleaned surfaces must be free from oil or grease.
- Perform the preliminary alignment of the transmission in the dry dock.
- Only place the transmission onto the ship foundation with the supporting surfaces and secure it against displacement.
- Remove lifting device.
- Do not distort the transmission while installing it on the ship foundation. All supporting surfaces must, together, lie evenly on the ship foundation.
- Align the transmission according to the calculations for the propshaft arrangement with the help of the alignment screws *(refer to section Aligning the transmission and the propshaft, page 147)*.
- Fasten the transmission to the ship foundation.

  The design of the fastening to the ship foundation must be defined by the shipyard.
- Screw down the output flange to the propshaft flange *(refer to section Aligning the transmission and the propshaft, page 147)*.
- Only remove the blank flanges and dummy plugs belonging to the oil connections and cooling water connections following complete installation of the transmission.
- Only change the settings of the pressure relief valves and monitoring devices following consultation with ZF Friedrichshafen AG.

  Changes to the control unit settings may only be performed by trained ZF specialized staff.
- Only use original ZF accessories that have been tested and released by ZF Friedrichshafen AG.

  In case foreign parts are used, the customer is responsible for risks involved.

3.14.2 Installation of pump unit's electric motor

⚠ DANGER

Danger to life due to energized components.
Death or sever injury probable.
⇨ Deenergize machine.
⇨ Protect the machine against unauthorized or accidental activation.

Work may only be performed by trained specialized staff. Observe all valid safety regulations and legal conditions to prevent personal injuries and damage to the ZF product. The specialized staff must read and understand these regulations and the respective product documentation prior to beginning work.

When installing the electric motor , observe the following:

- Install the electric motor in such a manner that the ventilation opening to and from the electric motor takes place without impairment.
- Warm exhaust air may not flow back.
- Electric works shall only be carried out by staff specially trained and authorized for handling high-voltage systems.
- Disconnect the equipment from the electric voltage supply prior to connecting the electric motor.
- Check the information on the electric motor type plate before connecting the electric motor to the electric voltage supply. The information on the type plate must correspond to the onboard conditions such as the voltage and frequency.
- The size of the connecting cables must correspond to the nominal current of the electric motor.
- Connect the start/stop function of the electric oil pump according to the provisions of the classification society and according to the provisions contained in the monitoring plan.
- Connect the cables according to the provisions in the circuit diagram. The circuit diagram is located in the electric motor terminal box.

  ℹ The type of connection depends on whether the direct activation or wye delta connection is selected as the start method. The type of connection is stipulated by the shipyard.
- The connection of the electric motor must correspond to the stipulated direction of rotation.
- Connect the protective conductor to the appropriate, marked terminal.
- The directions of rotation that are indicated on the electric motor and oil pump by means of an arrow must correspond to the provisions.
- Fasten the cables to the electric motor connection plate.

3.14.3 Installation of pump unit's oil pump

ℹ Notes for installing the pump unit's oil pump are specified in the transmission installation drawing for the pump unit.

When installing the electric oil pump , observe the following:

- The suction pressure of the electric oil pump may not be below 0.6 bar.
- When using an electric oil pump that is not fastened to the transmission, ZF Friedrichshafen AG recommends the installation of a flexible and fire-resistant connection between the oil pump and the

tubings on the transmission. The flexible connection must be designed for an operating pressure of 30 bar.
- The maximum operating pressure of the oil pump of 28 bar must not be exceeded. The oil pump's oil circuit is protected against unacceptably high overpressure by a pressure relief valve.
- The oil pump features a pressure relief valve.

3.14.4 Transmission oil cooler installation

Observe the following when installing the transmission oil cooler:

- Screw down the cooling water lines and the water supply flanges on the front side of the transmission oil cooler in such a manner that they are free from stress and vibrations and the connection flanges exactly fit on top of each other.
- Only use tubing with the nominal diameter as stipulated by ZF Friedrichshafen AG.
  The nominal diameter is stipulated in the transmission installation drawing.
- Take into account the flow direction when connecting water-carrying tubing.

Further information regarding the following installation points are stipulated in the listed sections:

- Cooling water circuit *(refer to section Cooling water circuit, page 122)*
- Transmission oil cooler *(refer to section Transmission oil cooler, page 123)*
- Tubing *(refer to section Tubing, page 126)*

3.14.5 Monitoring unit installation

Work may only be performed by trained specialized staff. Observe all valid safety regulations and legal conditions to prevent personal injuries and damage to the ZF product. The specialized staff must read and understand these regulations and the respective product documentation prior to beginning work.

Observe the following when installing the monitoring unit:

- To protect the wiring, place it in suitable cable ducts and cable funnels.
- The size of the connecting cables must comply with the provisions.
- Connect the monitoring unit according to the provisions of the classification society and according to the provisions contained in the monitoring plan.

3.14.6 Installation of electrically operated brake

DANGER

Danger to life due to energized components.
Death or sever injury probable.
⇨ Deenergize machine.
⇨ Protect the machine against unauthorized or accidental activation.

Work may only be performed by trained specialized staff. Observe all valid safety regulations and legal conditions to prevent personal injuries and damage to the ZF product. The specialized staff must read and understand these regulations and the respective product documentation prior to beginning work.

When installing the electrically operated brake , observe the following:

- Ensure, on the customer side, that the brake disk cannot be touched during operation.
- Clean brake disk using ethanol or 2-Propanol.
- The brake disk concentricity is within a tolerance of 0.2 mm.
- The maximum permissible lateral run-out of the brake disk is 0.1 mm.
- The distance between the friction blocks and the brake disk is 0.3 mm on both sides.
- The friction blocks are completely and centrally in contact with the brake disk when the brake is closed.
- Electric works shall only be carried out by staff specially trained and authorized for handling high-voltage systems.
- Disconnect the equipment from the electric voltage supply prior to connecting the electrically operated brake.
- Check the information on the brake type plate before connecting the brake to the electric voltage supply. The information on the type plate must correspond to the onboard conditions such as the voltage and frequency.
- The size of the connecting cables must correspond to the nominal current of the electrically operated brake.
- Do not use wound up cables for the supply line.
- Ensure sufficient quality of the voltage supply.
- Use an overvoltage protection switch when an electric drive is connected in parallel.
- Check protective conductor function after having installed the electrical connection.
- Switch frequency selector switch before changing the operating voltage frequency *(refer to section Frequency selector switch, page 133)*.

3.14.6.1 Frequency selector switch

The frequency selector switch is located in the electronics box of the electrically operated brake.

3.14.6.1.1 Switching frequency selector switch from 50 Hz to 60 Hz

Requirements:

- The main drive's engine starting mechanism is jammed.
- The power take-in's engine starting mechanism is jammed.
- The power take-in clutch is open.
- Output shaft is stationary.
- Only perform visual inspection and clean when engine is not running.

All work steps shall only be carried out by staff specially trained and authorized for handling high-voltage systems.

⚠ DANGER

Danger to life due to energized components.
Death or sever injury probable.

⇨ Deenergize machine.

⇨ Protect the machine against unauthorized or accidental activation.

1. Disconnect brake from voltage supply.

2. Check brake for zero potential.

3. Remove plug (2) from electronics box (1).

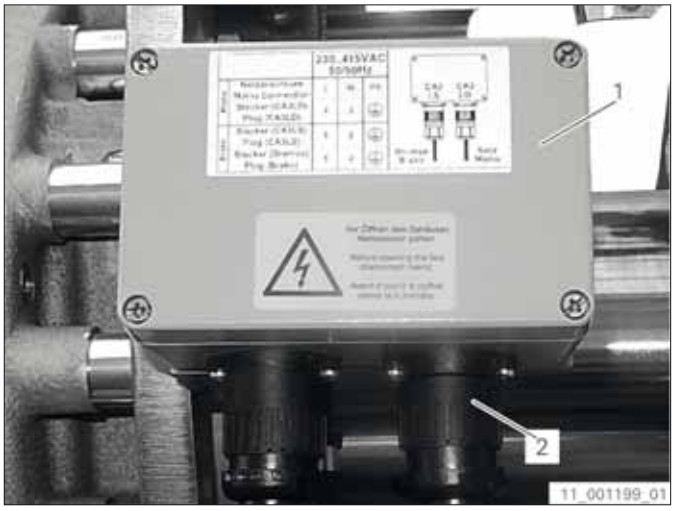

Fig. 99

4. Loosen screws (3) and remove cover (4).

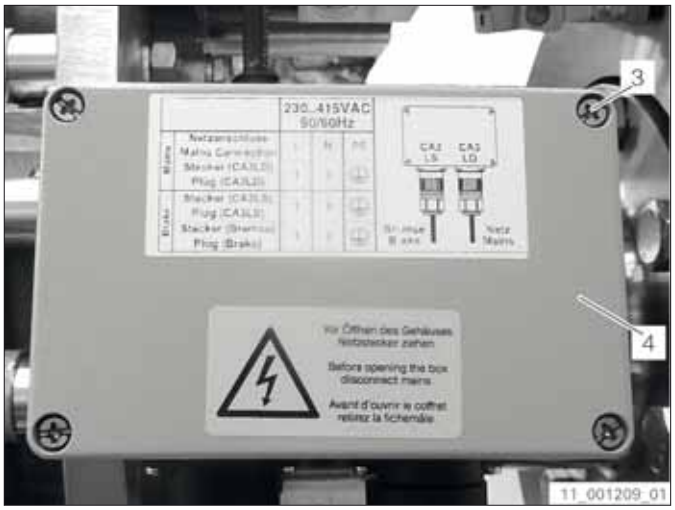

Fig. 100

5. Push frequency selector switch (5) into position ON.

   → Supply frequency of 60 Hz has been set.

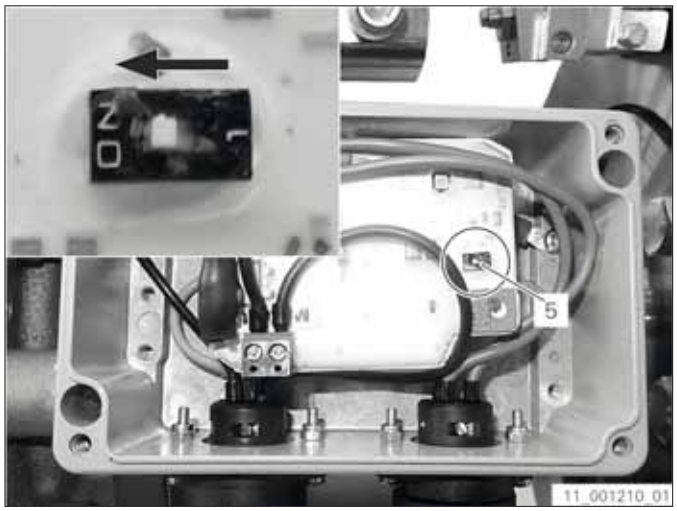

Fig. 101

6. Attach cover (4) to electronics box (1) using screws (3).

7. Tighten screws (3).

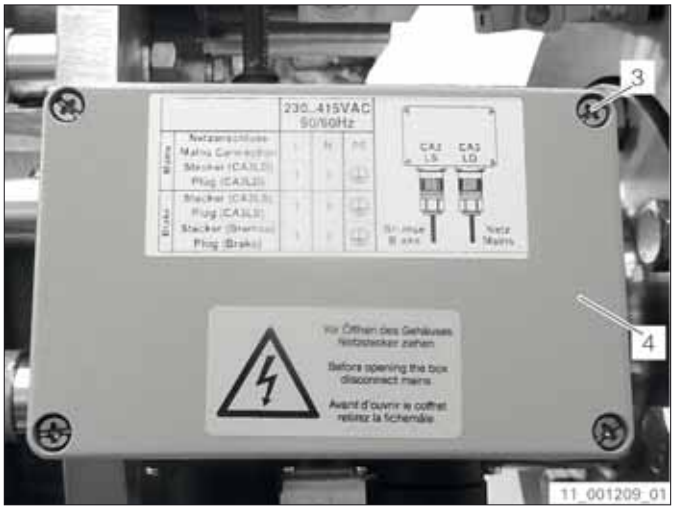

Fig. 102

8. Connect plug (2) to electronics box (1).

Fig. 103

9. Connect brake to voltage supply.

3.14.6.1.2 Switching frequency selector switch from 60 Hz to 50 Hz

Requirements:

- The main drive's engine starting mechanism is jammed.
- The power take-in's engine starting mechanism is jammed.
- The power take-in clutch is open.
- Output shaft is stationary.
- Only perform visual inspection and clean when engine is not running.

All work steps shall only be carried out by staff specially trained and authorized for handling high-voltage systems.

⚠ DANGER

Danger to life due to energized components.
Death or sever injury probable.

⇨ Deenergize machine.

⇨ Protect the machine against unauthorized or accidental activation.

1. Disconnect brake from voltage supply.

2. Check brake for zero potential.

3. Remove plug (2) from electronics box (1).

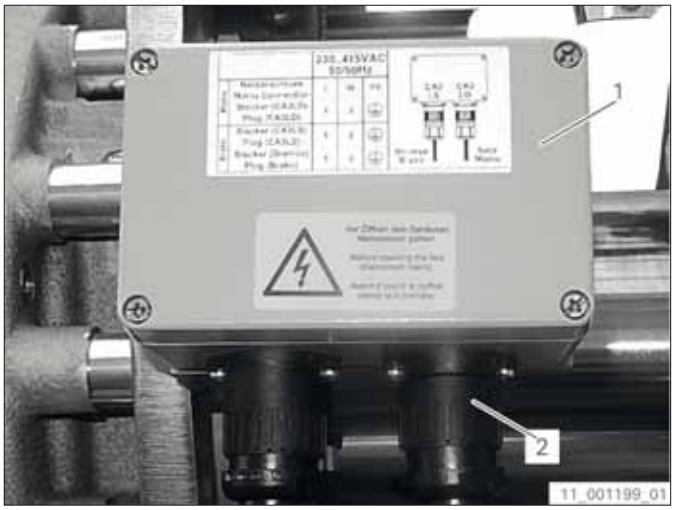

Fig. 104

4. Loosen screws (3) and remove cover (4).

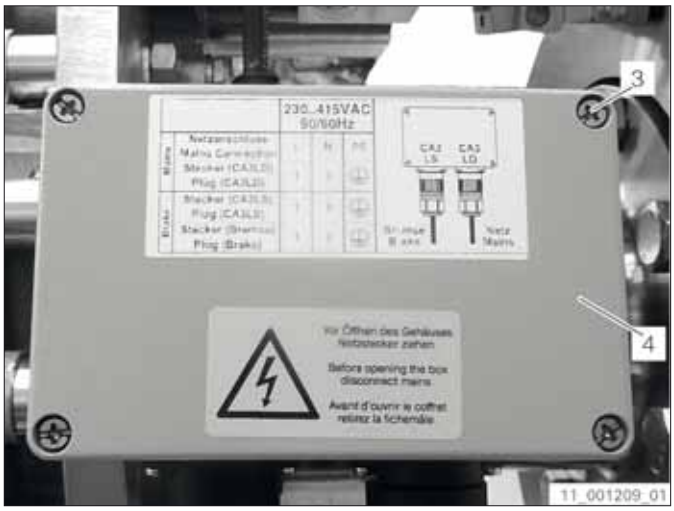

Fig. 105

5. Push frequency selector switch (5) into position 1.

   → Supply frequency of 50 Hz has been set.

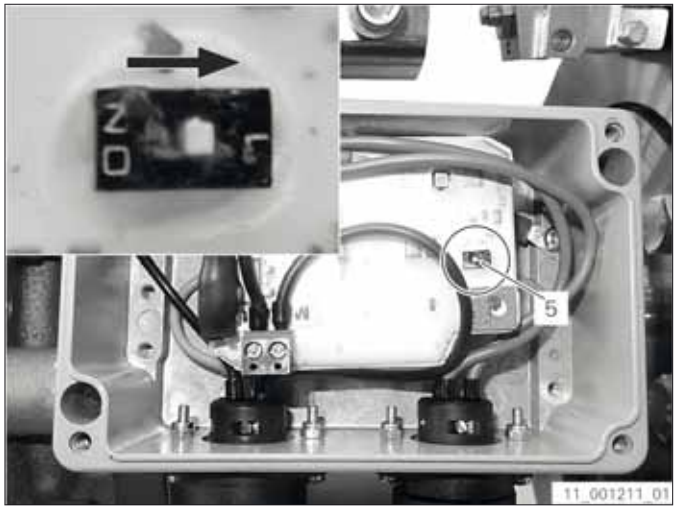

Fig. 106

6. Attach cover (4) to electronics box (1) using screws (3).

7. Tighten screws (3).

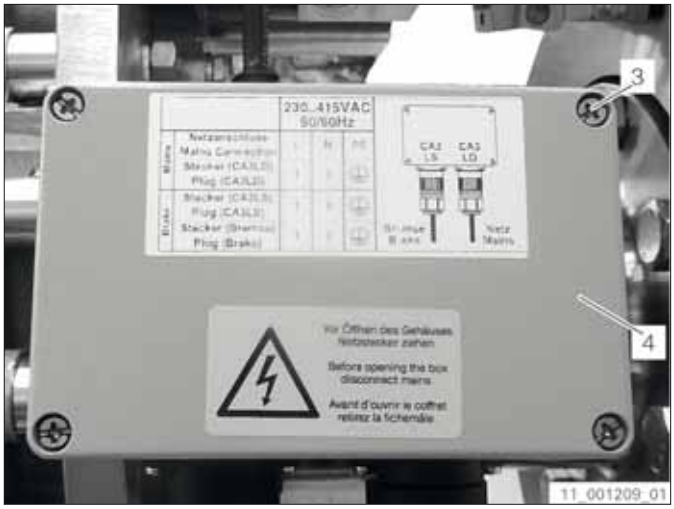

Fig. 107

8. Connect plug (2) to electronics box (1).

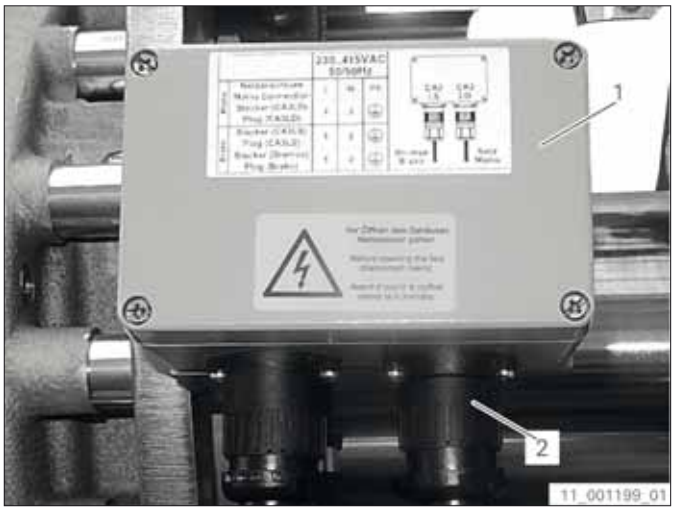

Fig. 108

9. Connect brake to voltage supply.

3.14.7 Transmission mounting in the ship foundation

Prior to implementing foundation work, submit the respective drawings and calculation data to the classification society for approval. The submission is carried out by the contracting party performing the work on the ship foundation.

3.14.7.1 Steel plate foundation

The transmission is freestanding and is rigidly mounted in the ship foundation.

Only set the transmission on the ship foundation with the alignment screws. Use solid washers in order to align the transmission on the ship foundation. Individual supports that are only present in the areas of the screws in the ship foundation are not permissible. Alignment screws are supplied with transmissions supplied by ZF. Remove the used alignment screws following installation of the supports.

Do not distort the transmission while installing it on the ship foundation. Therefore, place all supporting surfaces together evenly on the ship foundation.

Use either fit bolts or through bolts to fasten the supporting surfaces in the ship foundation.
ZF Friedrichshafen AG recommends to use through bolts and to attach fixed stoppers at the points marked in the transmission installation drawing. The design of the fastening, e.g. screw diameter and screw quality, depends on the operating load and must be determined by the shipyard.

When designing the fastening, ensure that the following points are supported by the transmission mounting:

- Propeller thrust
- Weight
- Reaction forces
  - of the input torque
  - of the gear ratio-dependent output torque

The shipyard must provide the bores in the ship foundation for the screws in order to fasten the transmission to the ship foundation.

The position of the bores in the ship foundation is stipulated in the transmission installation drawing.

3.14.7.2 Cast resin foundation

The rigid supporting surface of the transmission housing is designed for direct mounting on a rigid surface, e.g. for the ship foundation frame. When mounting a transmission on cast resin, the contact area must probably be enhanced by an adapter plate provided by the shipyard.

When mounting a transmission on cast resin, the space between the ship foundation and the supporting surface or the adapter plate is cast. When using an adapter plate, it must be designed in such a manner that the transmission removal and transmission installation are both possible without destroying the cast resin foundation. Provide two fit bolts for positioning. In addition, provide stoppers on the foundation in order to transmit the propeller thrust. Following hardening of the cast resin, the transmission may only be supported via the cast resin and not via the alignment screws or other alignment aids. Shrinking of the cast resin during hardening must already be taken into consideration during the alignment of the transmission.

ZF Friedrichshafen AG recommends designing the cast resin mounting in cooperation with the cast resin supplier or a qualified specialized company. Such a specialized company consults in advance and is in the position to compile the calculations and drawings required for approval from a classification society and to submit them for approval.

3.14.8 Connection to the engine

When connecting the transmission to the engine, it can either be flange-mounted or freestanding.

3.14.8.1 Freestanding installation

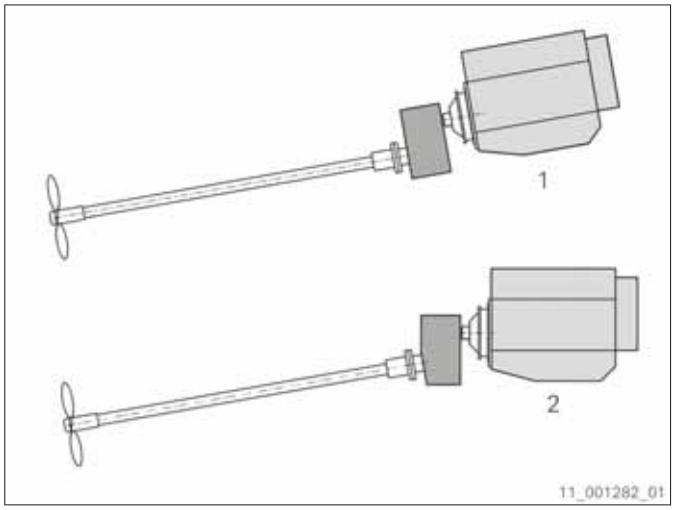

1 Parallel version
2 A version

Fig. 109

Install a torsionally flexible coupling between the engine and the transmission. The task of the torsionally flexible coupling is to influence the natural frequencies of the rotating masses of the engine, transmission and propeller in such a manner that no damaging vibrational resonances occur within the operating speed range. If, in exceptional circumstances, a resonance speed cannot be avoided within an operating speed range, stipulate a restricted range for certain speeds. The restricted range depends on the magnitude of the calculated vibration deflections.

Using a torsional vibration calculation, the engine manufacturer is usually responsible for the selection of the torsionally flexible coupling. The torsional vibration calculation also takes excitations caused by the engine controller into consideration. The necessary transmission information for the calculation are stipulated in the Data for the Torsional Vibration Calculation calculation sheet.

If the torsionally flexible connection is supplied by ZF Friedrichshafen AG with the help of a selection from the engine manufacturer or according to a definition from the shipyard, under no circumstances will ZF Friedrichshafen AG assume warranty for the suitability or the durability of the torsionally flexible connection.

The transmission is either freestanding and rigidly mounted in the ship foundation or freestanding and flexibly mounted. The engine is usually flexibly mounted. A torsionally flexible coupling establishes the drive connection between the engine and the transmission. The torsionally flexible coupling serves to dampen the torsional vibrations and also compensates axial, angular and radial displacements of the connected units.

3.14.8.2 Flange-mounted installation

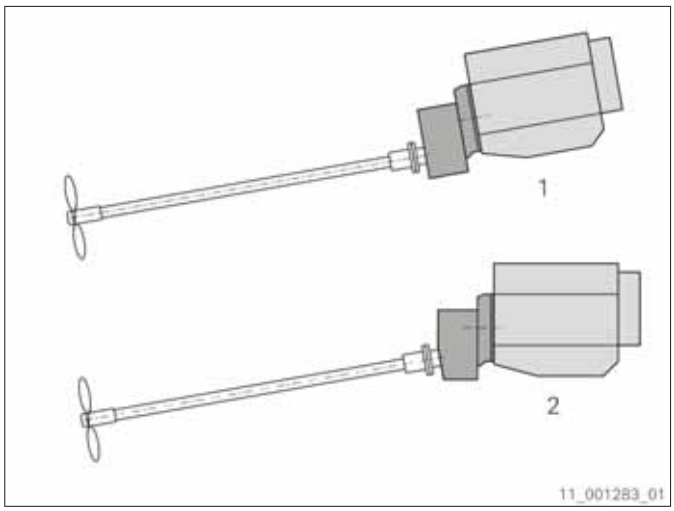

1 Parallel version
2 A version

Fig. 110

Install a torsionally flexible coupling between the engine and the transmission. The task of the torsionally flexible coupling is to influence the natural frequencies of the rotating masses of the engine, transmission and propeller in such a manner that no damaging vibrational resonances occur within the operating speed range. If, in exceptional circumstances, a resonance speed cannot be avoided within an operating speed range, stipulate a restricted range for certain speeds. The restricted range depends on the magnitude of the calculated vibration deflections.

Using a torsional vibration calculation, the engine manufacturer is usually responsible for the selection of the torsionally flexible coupling. The torsional vibration calculation also takes excitations caused by the engine controller into consideration. The necessary transmission information for the calculation are stipulated in the Data for the Torsional Vibration Calculation calculation sheet.

If the torsionally flexible connection is supplied by ZF Friedrichshafen AG with the help of a selection from the engine manufacturer or according to a definition from the shipyard, under no circumstances will ZF Friedrichshafen AG assume warranty for the suitability or the durability of the torsionally flexible connection.

The transmission is connected to the engine via the mounting bell. The drive unit, consisting of the engine and the transmission, is usually flexibly mounted in the ship foundation. A torsionally flexible coupling establishes the drive connection between the engine and the transmission. The torsionally flexible coupling serves to dampen the torsional vibrations. The mounting bell ensures that the torsionally flexible coupling can be arranged centrally between the engine and the transmission. That way, no additional axial, angular and radial displacements of the connected units must be compensated.

3.14.8.3 Installation via cardan shaft

The engine and the transmission are connected at one level via a cardan shaft. The propshaft is tilted at the angle α relative to the longitudinal axis of the drive unit, as is the transmission output flange.

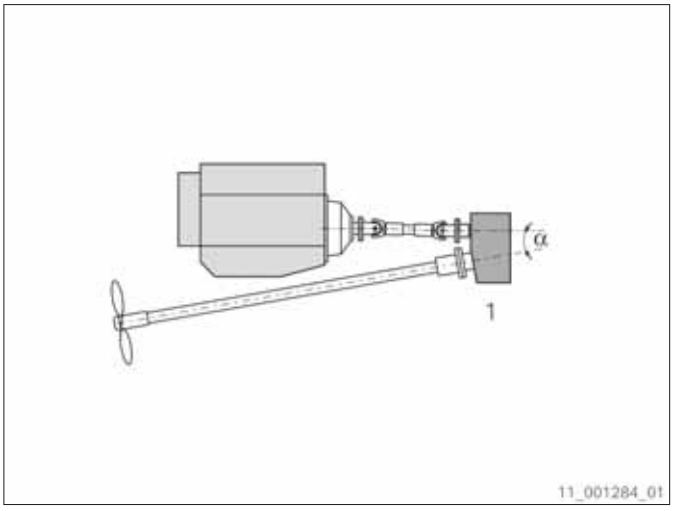

Fig. 111

1 V version

Install a torsionally flexible coupling between the engine and the transmission. The task of the torsionally flexible coupling is to influence the natural frequencies of the rotating masses of the engine, transmission and propeller in such a manner that no damaging vibrational resonances occur within the operating speed range. If, in exceptional circumstances, a resonance speed cannot be avoided within an operating speed range, stipulate a restricted range for certain speeds. The restricted range depends on the magnitude of the calculated vibration deflections.

Using a torsional vibration calculation, the engine manufacturer is usually responsible for the selection of the torsionally flexible coupling. The torsional vibration calculation also takes excitations caused by the engine controller into consideration. The necessary transmission information for the calculation are stipulated in the Data for the Torsional Vibration Calculation calculation sheet.

If the torsionally flexible connection is supplied by ZF Friedrichshafen AG with the help of a selection from the engine manufacturer or according to a definition from the shipyard, under no circumstances will ZF Friedrichshafen AG assume warranty for the suitability or the durability of the torsionally flexible connection.

The transmission is either freestanding and rigidly mounted in the ship foundation or freestanding and flexibly mounted. The engine is usually flexibly mounted. A torsionally flexible coupling establishes the drive connection between the engine and the transmission. The torsionally flexible coupling serves to dampen the torsional vibrations and also compensates axial, angular and radial displacements of the connected units.

A cardan shaft with length adjustment is installed between the torsionally flexible coupling and the transmission input flange. The cardan shaft's joints create radial forces and bending torques. Furthermore, axial forces to the extent that they may be transferred by the cardan shaft's length adjustment are created due to the length alternations between the engine and the transmission. Ensure when using a cardan shaft that the length adjustment is fully functional under load and that the stroke is sufficient even in extreme situations like shock loads. The value of all these forces and bending torques depends on the transmitted torque, the cardan shaft length and the cardan shaft angle value.

A bending vibration calculation for the propulsion system must be performed in order to select the correct cardan shaft.

ZF Friedrichshafen AG recommends to calculate the bending vibrations. The bending vibration calculation is not part of the ZF scope of supply.

The forces and bending torques rest on the ship's foundation on the input shaft, transmission housing and suspension brackets on the transmission end and on the torsionally flexible coupling, engine crankshaft and engine housing on the engine end. Thus, the torsionally flexible coupling must feature additional bearing elements between the primary side and secondary side. If the torsionally flexible coupling or the engine crankshaft cannot take up the forces and bending torques created by the cardan shaft, an additional bearing must be installed between the cardan shaft and the torsionally flexible coupling. The bearing is supported by a mounting bell at the engine or by an installed intermediate shaft mounted in the ship foundation.

The forces and bending torques created by the cardan shaft appear periodically with twice the engine speed. Do not exceed the maximum additional load at the input shaft *(refer to section Input shaft direction of rotation, page 185)*. Design the suspension brackets for the intermediate shaft, for the transmission and for the ship foundation in such a manner that no impermissible deformations might occur. Impermissible deformations lead to noise and vibrations. To avoid impermissible deformations, it might be necessary to reinforce the ship foundation. ZF Friedrichshafen AG recommends to use flexible mountings to limit the noise transmission for transmissions in V arrangement. Due to the freestanding transmission installation, only a short mounting basis is available. Thus, only hard-flexible mountings shall be used for taking up the thrust. In addition, a high foundation stiffness is required.

Recommendations for foundation stiffnesses can be found in the flexible transmission mounting drawings or can be requested from qualified expert companies.

The cardan shaft size to be used depends upon the engine output, the engine speed, the cardan shaft angle size and the required cardan shaft service life. In general, the recommendation is issued by the cardan shaft manufacturer based on the precise use case.

For the cardan shafts to work kinematically smoothly, the cardan shaft angles must have the same size on both sides and the joint yokes must be installed at one level. Also strive for small cardan shaft angles.

Transmissions in V arrangement already have a tilted output shaft. Thus, the cardan shaft angle can be reduced down to a value that is required for the cardan shafts' spherical plain bearings.
ZF Friedrichshafen AG recommends to take advantage of the tilted output shaft and not to exceed a cardan shaft angle of maximum 3°. Furthermore, strive for a cardan shaft center section with a small dynamic rotating mass.

Observe the cardan shaft manufacturer's technical documents.

Depending on the installation position of the cardan shaft, two arrangements are possible:

- W arrangement, $\beta_1 = \beta_2$

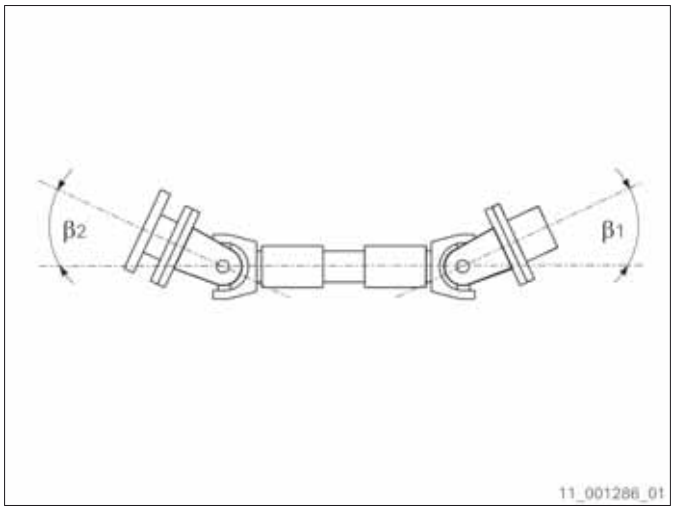

Fig. 112

- Z arrangement, $\beta_1 = \beta_2$

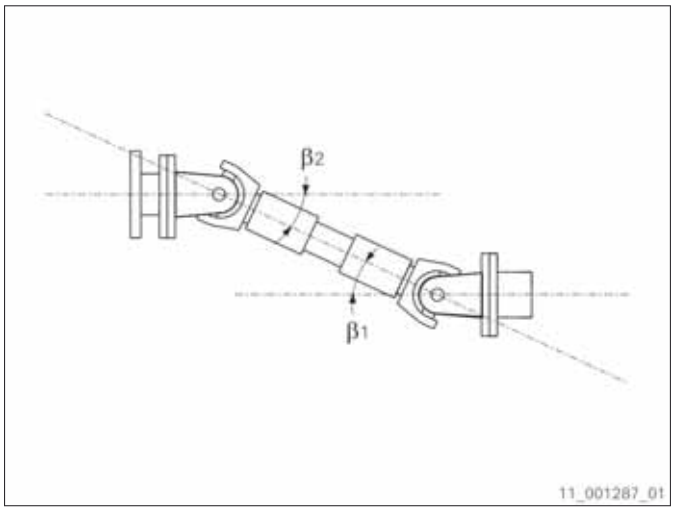

Fig. 113

3.14.9 Connection to the propshaft

The design of the connection between the output flange and the propshaft flange depends on the operating load and is determined by the shipyard. The output flange is designed in such a manner that the highest permissible output torque is transmitted by friction contact.

The screw size and screw quality for all present screw bores are stipulated in the propeller connection drawing.

When using fit bolts, the propshaft flange bores must be drilled out and reamed together with the output flange bores.

3.14.9.1 Propshaft alignment

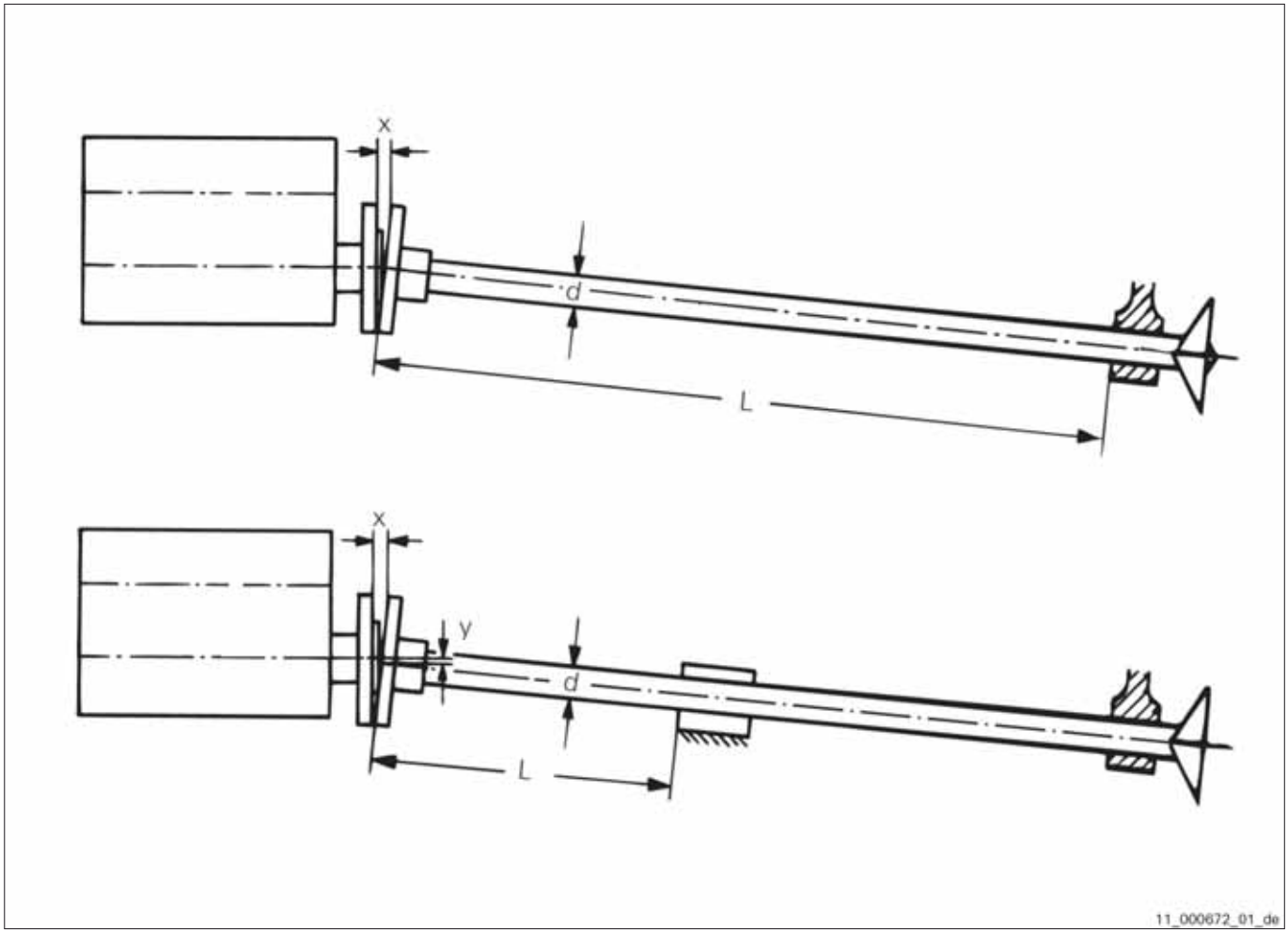

Fig. 114

x Maximum permissible misalignment GAP
L Lowest permissible bearing distance
y Maximum shaft offset SAG
d Propshaft diameter

Distance (L) between the propshaft and the final shaft bearing must be large enough depending on shaft diameter (d). In this case, the values for misalignment (x) and shaft offset (y) apply.

Shaft systems with a single bearing for the propshaft

The propshaft must be able to move axially and radially in such a manner that the propshaft flange can be inserted into the centering device of the output flange. Align the transmission in such a manner that the permissible misalignment (x) is not exceeded *(refer to tab. 24, page 189)*. In doing so, the shaft offset (y) is not taken into consideration.

Shaft systems with two or multiple bearings for the propshaft

The propshaft must be able to move axially in such a manner that the propshaft flange can be inserted into the centering device of the output flange. Align the transmission in such a manner that the permissible misalignment (x) is not exceeded. Misalignment (x) and shaft offset (y) can occur simultaneously. In the event of extremely thin shafts and a large distance (L), it is often the case that shaft offset (y) cannot be measured. Do not take into account the shaft offset (y) if the radial force used to insert the propshaft into the centering device of the output flange is not exceeded *(refer to tab. 24, page 189)*. In this case, the information for the shaft systems with a single bearing for the propshaft apply.

3.14.10 Transmission alignment

The requirement for a trouble-free operation of the entire propulsion system is that the following units are precisely aligned to each other at operating temperature and under full load:

- Output shaft and propshaft
- Engine and input shaft
- Units and the associated PTO transmissions

Observe the following before aligning the transmission:

- Secure the transmission against displacement before aligning it.
- Secure the propshaft against rotational movements.
- Do not connect the transmission to the engine via the torsionally flexible coupling.
- Determine and document misalignments GAP (x) and SAG (y) of the shaft connections between the transmission and all connected units based on the technical requirements of the individual components, incl. the temperatures of the individual components.
- Observe the technical information for the alignment of the individual units of the drive unit.
- Ensure a constant ambient temperature during the alignment process. In doing so, consider the impact of solar radiation.
- Consider the thermal expansion of the engine, propeller, transmission and the PTO units under operating conditions *(refer to section Thermal displacement, page 146)*.
- The ship must be fully equipped.
- The ship must float in water.

3.14.10.1 Thermal displacement

Consider the thermal displacements of the engine, propeller, further units and the ship foundation for the calculations of the entire drive unit.

Sufficiently consider the displacement of the transmission shafts that can become greater during operation when calculating the alignment of the entire drive unit. Displacements are the result of thermal expansion of the transmission.

The center distances of the output shaft and the input shaft to the ship foundation depend on the size of the transmission.

The nominal center distances of output shaft and input shaft at 20°C are stipulated in the transmission installation drawing.

Observe the following when determining the displacement value:

- In order to determine the vertical displacement, use the distance between the supporting surface of the transmission on the ship foundation and the respective transmission axle.
- Also observe the horizontal displacement when dealing with transmission axles that are not in alignment with the level of the output shaft and the input shaft.
- In order to determine the thermal displacement, use the transmission installation drawing.

3.14.10.2 Aligning the transmission and the propshaft

Requirements:

- The propshaft and, if present, the propeller intermediate shaft, are installed into the ship's hull in their working position in a stationary manner.
- The propshaft and, if present, the propeller intermediate shaft, are rigidly mounted.
- The propeller is installed.
- The propshaft flanges, if present, are connected with each other.
- The output flange is in the alignment position.
- The alignment values and instructions for the alignment of the propshaft are defined.
- The values for thermal displacement under operating conditions are determined.

1. Align the transmission located on the ship foundation with the supporting surfaces to the propshaft using the alignment screws.

   For this purpose, use the alignment screws in order to align the transmission in the following directions:

   - Longitudinal
   - Transversal
   - Vertical

2. Observe the alignment values and instructions that were defined for the propeller.

3. Take the thermal displacement of the output shaft in relation to the supporting surfaces on the ship foundation under operating conditions into account *(refer to section Thermal displacement, page 146)*.

4. Measure misalignment GAP (x) and shaft offset SAG (y) using suitable measuring equipment, e.g. a laser or feeler gage.

   The value for the maximum misalignment GAP (x) and the maximum shaft offset SAG (y) depends on the center distance between the output shaft and the input shaft *(refer to section Alignment accuracy of the propshaft, page 189)*.

5. When determining the misalignment and shaft offset, only turn the shafts into one direction.

   As a result of the bearing clearance, each change to the direction of rotation leads to a displacement of the shaft.

6. Note down the following values:
   - Misalignment GAP (x)
   - Shaft offset SAG (y)
   - Transmission temperature

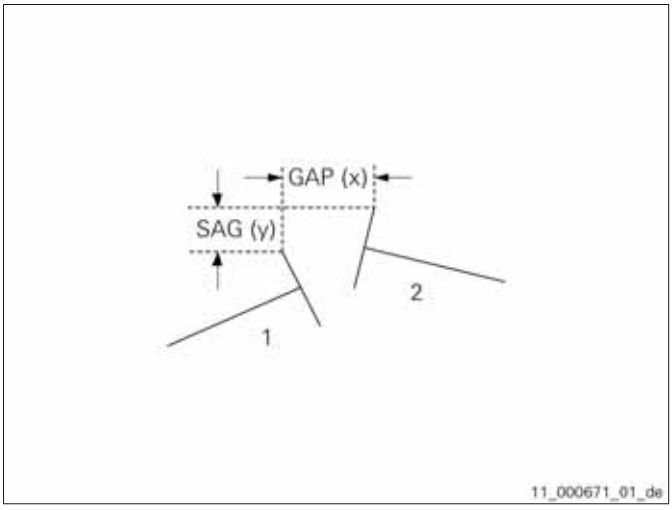

Fig. 115

1 Propshaft
2 Output shaft

7. Support transmission foundation with steel plates or cast with cast resin.

   Observe the setting process for the cast resin. Information regarding these setting processes can be obtained from the cast resin supplier.

8. Fit screws.

9. The cast resin must be completely hardened before the alignment screws are removed.

   Loosen alignment screws before tightening the screws.

10. Observe reaction forces and reaction torques from operation of the equipment.

    Tighten all screws.

    In case of cast resin, observe the correspondingly permissible surface pressure of the cast resin used for the tightening torques.

11. Screw down the output shaft and the propshaft flange using all screws *(refer to section Connection to the propshaft, page 144)*.

3.14.10.3 Aligning the transmission and the engine

Requirements:

- Transmission is screwed to the ship foundation.
- Transmission and propshaft are aligned to each other and screwed together.
- Observe thermal displacement under operating conditions.
- The engine is axially aligned with the transmission. The distance between transmission and engine corresponds to the determined value for the torsionally flexible coupling. Keep the axial force of the torsionally flexible coupling which affects the engine and the transmission as low as possible.
- Observe the values as determined by the manufacturer for the engine and the torsionally flexible coupling.
- Observe the manufacturer's installation instructions for the engine and the torsionally flexible coupling.

Align the engine to the transmission without the torsionally flexible coupling. The torsionally flexible coupling is installed following the axial and radial alignment of the engine to the transmission.

The correct alignment of the engine to the transmission and the installation of the engine and the torsionally flexible coupling is not the responsibility of ZF Friedrichshafen AG; it is the responsibility of the shipyard.

1. Align engine and transmission according to the manufacturer's instructions.

2. Install torsionally flexible coupling between aligned engine and transmission according to the manufacturer's instructions.

3.14.10.4 Aligning the transmission and the engine when using a cardan shaft

Requirements:

- Transmission is screwed to the ship foundation.
- Transmission and propshaft are aligned to each other and screwed together.
- Observe thermal displacement under operating conditions.
- Observe the values as determined by the manufacturer for the engine and the torsionally flexible coupling.
- Observe the manufacturer's installation instructions for the engine and the torsionally flexible coupling.
- The torsionally flexible coupling has been attached to the engine.
- The engine is axially aligned with the transmission. Distance between transmission and engine matches the length of the cardan shaft. Keep the axial force of the torsionally flexible coupling which affects the engine and the cardan shaft as low as possible.

Align the engine to the transmission without the cardan shaft. The cardan shaft is installed following the axial and radial alignment of the engine to the transmission.

The correct alignment of the engine to the transmission and the installation of the engine and the cardan shaft is not the responsibility of ZF Friedrichshafen AG; it is the responsibility of the shipyard.

1. Install two equally long alignment shafts (6).

2. Align engine (3), torsionally flexible coupling (4) and transmission (1) according to the manufacturer's instructions.
   The engine is correctly aligned if the following conditions are met:
   - Both joint angles of the auxiliary fixture (6) have the same size.
   - Tips of the auxiliary fixture's alignment shafts (6) meet.
   - Auxiliary fixture's alignment shafts (6) are on the same level.

3. Take out alignment shafts (6).

4. Both cardan shaft angles β_1 and β_2 may deviate at most by 0.5°.

   To check the cardan shaft angles, a laser alignment fixture might be used.

   Install cardan shaft (5) according to the manufacturer's instructions between torsionally flexible coupling (4) and transmission (1).

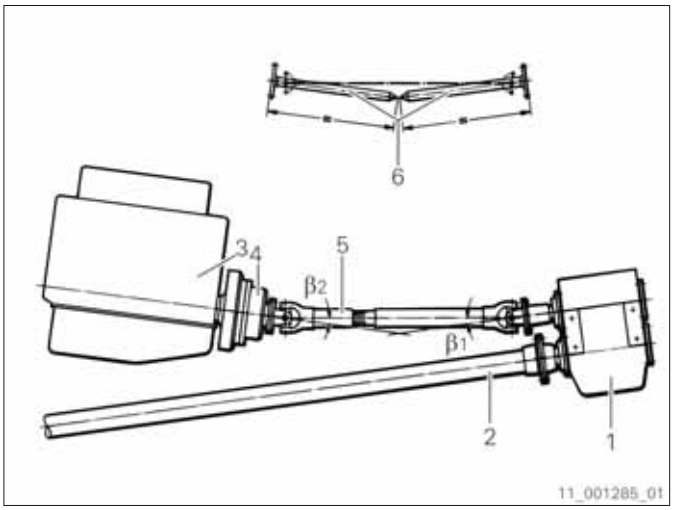

Fig. 116

1 Transmissions
2 Propshaft
3 Engine
4 Torsionally flexible coupling with self-centering
5 Cardan shaft with length adjustment
6 Auxiliary fixture for aligning engine and transmission

4 Technical Data

4.1 Technical Data for transmission types ZF 3000, ZF 3050, ZF 3055, ZF 3060, ZF 3070, ZF 3000 NR, ZF 3050 NR, ZF 3055 NR, ZF 3060 NR and ZF 3070 NR

The Technical Data is summarized in the following table and is valid for the respective basic transmission.

	Reverse transmission	NR transmission
Weight	The total weight of the transmission depends on the transmission version and the special equipment contained in the scope of supply. The respective total weight is specified on the type plate on the transmission.	
Transmission ratio	The ratio of the transmission is specified on the type plate on the transmission.	
Clutch nominal pressure	17 bar for transmission types ZF 3000, ZF 3050, ZF 3000 NR, ZF 3050 NR 19 bar for transmission types ZF 3055, ZF 3055 NR 21.5 bar for transmission types ZF 3060, ZF 3070, ZF 3060 NR, ZF 3070 NR	
Permissible clutch oil pressure range during operation	16-20 bar for transmission types ZF 3000, ZF 3050, ZF 3000 NR, ZF 3050 NR in counter-rotation or enginewise rotation shift position 18-22 bar for transmission types ZF 3055, ZF 3055 NR in counter-rotation or enginewise rotation shift position 20.5-24.5 bar for transmission types ZF 3060, ZF 3070, ZF 3060 NR, ZF 3070 NR in counter-rotation or enginewise rotation shift position 3.5-14 bar in neutral shift position	
Lubricating oil pressure	0.4-13 bar	
Oil sump temperature during operation	30-90°C	
Thrust bearing nominal temperature	30-110°C	
Temperature range in the machine room	5-50°C	
Maximum permissible water pressure on the cooling water inlet of the transmission oil cooler	4 bar	
Maximum permissible cooling water inlet temperature	35°C for application group P, L, M 50°C for application group C	
Minimum permissible cooling water flow rate	3,000 dm^3/h	
Maximum permissible cooling water flow rate	11,000 dm^3/h	
Pressure loss between the cooling water inlet and the cooling water outlet at the maximum permissible cooling water flow rate	0.3 bar	
Filter size of the suction filter on the water end	3 mm	
Oil quantity	31 dm^3	

	Reverse transmission	NR transmission
Oil grade[2)]	Refer to ZF List of Lubricants TE-ML 04.	
Output shaft inclination angle	0°	
Maximum permissible operating lean angle based on the water level	Fore and aft ±25° Athwartship ±35°	

Tab. 3 Technical Data of transmission types ZF 3000, ZF 3050, ZF 3055, ZF 3060, ZF 3070, ZF 3000 NR, ZF 3050 NR, ZF 3055 NR, ZF 3060 NR and ZF 3070 NR

2) The valid ZF List of Lubricants TE-ML 04 can be downloaded as a PDF document free of charge at www.zf.com .

4.2 Technical Data for transmission types ZF 3000 NC, ZF 3050 NC, ZF 3055 NC, ZF 3060 NC with counter-rotation direction

The Technical Data are summarized in the following table and are valid for the respective basic transmission.

	NC transmission
Weight	The total weight of the transmission depends on the transmission version and the special equipment contained in the scope of supply. The respective total weight is specified on the type plate on the transmission.
Transmission ratio	The ratio of the transmission is specified on the type plate on the transmission.
Lubricating oil pressure	0.4-14 bar
Oil sump temperature during operation	30-90°C
Temperature range in the machine room	5-50°C
Maximum permissible water pressure on the cooling water inlet of the transmission oil cooler	4 bar
Maximum permissible cooling water inlet temperature	35°C for application group P, L, M 50°C for application group C
Minimum permissible cooling water flow rate	3,000 dm^3/h
Maximum permissible cooling water flow rate	11,000 dm^3/h
Pressure loss between the cooling water inlet and the cooling water outlet at the maximum permissible cooling water flow rate	0.3 bar
Filter size of the suction filter on the water end	3 mm
Oil quantity	31 dm^3
Oil grade[3)]	Refer to ZF List of Lubricants TE-ML 04.
Output shaft inclination angle	0°
Maximum permissible operating lean angle based on the water level	Fore and aft ±25° Athwartship ±35°

Tab. 4 Technical Data of transmission types ZF 3000 NC, ZF 3050 NC, ZF 3055 NC, ZF 3060 NC with counter-rotation direction

3) The valid ZF List of Lubricants TE-ML 04 can be downloaded as a PDF document free of charge at www.zf.com .

4.3 Technical Data for transmission types ZF 3000 A, ZF 3055 A, ZF 3055 A, ZF 3060 A, ZF 3070 A, ZF 3150 A, ZF 3160 A, ZF 3170 A, ZF 3000 NRA, ZF 3050 NRA, ZF 3055 NRA, ZF 3060 NRA, ZF 3070 NRA, ZF 3150 NRA, ZF 3160 NRA and ZF 3170 NRA

The Technical Data is summarized in the following table and is valid for the respective basic transmission.

	Reverse transmission	NR transmission
Weight	The total weight of the transmission depends on the transmission version and the special equipment contained in the scope of supply. The respective total weight is specified on the type plate on the transmission.	
Transmission ratio	The ratio of the transmission is specified on the type plate on the transmission.	
Clutch nominal pressure	17 bar for transmission types ZF 3000 A, ZF 3050 A, ZF 3150 A, ZF 3000 NRA, ZF 3050 NRA, ZF 3150 NRA 19 bar for transmission types ZF 3055 A, ZF 3055 NRA 21.5 bar for transmission types ZF 3060 A, ZF 3070 A, ZF 3160 A, ZF 3170 A, ZF 3060 NRA, ZF 3070 NRA, ZF 3160 NRA, ZF 3170 NRA	
Permissible clutch oil pressure range during operation	16-20 bar for transmission types ZF 3000 A, ZF 3050 A, ZF 3150 A, ZF 3000 NRA, ZF 3050 NRA, ZF 3150 NRA in counter-rotation or enginewise rotation shift position 18-22 bar for transmission types ZF 3055 A, ZF 3055 NRA in counter-rotation or enginewise rotation shift position 20.5-24.5 bar for transmission types ZF 3060 A, ZF 3070 A, ZF 3160 A, ZF 3170 A, ZF 3060 NRA, ZF 3070 NRA, ZF 3160 NRA, ZF 3170 NRA in counter-rotation or enginewise rotation shift position 3.5-14 bar in neutral shift position	
Lubricating oil pressure	0.4-13 bar	
Oil sump temperature during operation	30-90°C	
Thrust bearing nominal temperature	30-110°C	
Temperature range in the machine room	5-50°C	
Maximum permissible water pressure on the cooling water inlet of the transmission oil cooler	4 bar	
Maximum permissible cooling water inlet temperature	35°C for application group P, L, M 50°C for application group C	
Minimum permissible cooling water flow rate	3,000 dm^3/h	
Maximum permissible cooling water flow rate	11,000 dm^3/h	
Pressure loss between the cooling water inlet and the cooling water outlet at the maximum permissible cooling water flow rate	0.3 bar	
Filter size of the suction filter on the water end	3 mm	
Oil quantity	28 dm^3 for transmission types ZF 3000 A, ZF 3050 A, ZF 3055 A, ZF 3060 A, ZF 3000 NRA, ZF 3050 NRA, ZF 3055 NRA, ZF 3060 NRA 31 dm^3 for transmission types ZF 3070 A, ZF 3150 A, ZF 3160 A, ZF 3170 A, ZF 3070 NRA, ZF 3150 NRA, ZF 3160 NRA, ZF 3170 NRA	

	Reverse transmission	NR transmission
Oil grade[4)]	Refer to ZF List of Lubricants TE-ML 04.	
Output shaft inclination angle	10°	
Maximum permissible operating lean angle based on the water level	Fore and aft ±25° Athwartship ±35°	

Tab. 5 Technical Data of transmission types ZF 3000 A, ZF 3055 A, ZF 3055 A, ZF 3060 A, ZF 3070 A, ZF 3150 A, ZF 3160 A, ZF 3170 A, ZF 3000 NRA, ZF 3050 NRA, ZF 3055 NRA, ZF 3060 NRA, ZF 3070 NRA, ZF 3150 NRA, ZF 3160 NRA and ZF 3170 NRA

4) The valid ZF List of Lubricants TE-ML 04 can be downloaded as a PDF document free of charge at www.zf.com .

4.4 Technical Data for transmission types ZF 3000 V, ZF 3055 V, ZF 3055 V, ZF 3060 V, ZF 3070 V, ZF 3000 NRV, ZF 3050 NRV, ZF 3055 NRV, ZF 3060 NRV and ZF 3070 NRV

The Technical Data is summarized in the following table and is valid for the respective basic transmission.

	Reverse transmission	NR transmission
Weight	The total weight of the transmission depends on the transmission version and the special equipment contained in the scope of supply. The respective total weight is specified on the type plate on the transmission.	
Transmission ratio	The ratio of the transmission is specified on the type plate on the transmission.	
Clutch nominal pressure	17 bar for transmission types ZF 3000 V, ZF 3050 V, ZF 3000 NRV, ZF 3050 NRV 19 bar for transmission types ZF 3055 V, ZF 3055 NRV 21.5 bar for transmission types ZF 3060 V, ZF 3070 V, ZF 3060 NRV, ZF 3070 NRV	
Permissible clutch oil pressure range during operation	16-20 bar for transmission types ZF 3000 V, ZF 3050 V, ZF 3000 NRV, ZF 3050 NRV in counter-rotation or enginewise rotation shift position 18-22 bar for transmission types ZF 3055 V, ZF 3055 NRV in counter-rotation or enginewise rotation shift position 20.5-24.5 bar for transmission types ZF 3060 V, ZF 3070 V, ZF 3060 NRV, ZF 3070 NRV in counter-rotation or enginewise rotation shift position 3.5-14 bar in neutral shift position	
Lubricating oil pressure	0.4-13 bar	
Oil sump temperature during operation	30-90°C	
Thrust bearing nominal temperature	30-110°C	
Temperature range in the machine room	5-50°C	
Maximum permissible water pressure on the cooling water inlet of the transmission oil cooler	4 bar	
Maximum permissible cooling water inlet temperature	35°C for application group P, L, M 50°C for application group C	
Minimum permissible cooling water flow rate	3,000 dm^3/h	
Maximum permissible cooling water flow rate	11,000 dm^3/h	
Pressure loss between the cooling water inlet and the cooling water outlet at the maximum permissible cooling water flow rate	0.3 bar	
Filter size of the suction filter on the water end	3 mm	
Oil quantity	31 dm^3	

	Reverse transmission	NR transmission
Oil grade[5)]	Refer to ZF List of Lubricants TE-ML 04.	
Output shaft inclination angle	10°	
Maximum permissible operating lean angle based on the water level	Fore and aft ±25° Athwartship ±35°	

Tab. 6 Technical Data of transmission types ZF 3000 V, ZF 3055 V, ZF 3055 V, ZF 3060 V, ZF 3070 V, ZF 3000 NRV, ZF 3050 NRV, ZF 3055 NRV, ZF 3060 NRV and ZF 3070 NRV

5) The valid ZF List of Lubricants TE-ML 04 can be downloaded as a PDF document free of charge at www.zf.com .

4.5 Technical Data for transmission types ZF 3050 D, ZF 3055 D and ZF 3060 D

The Technical Data is summarized in the following table and is valid for the respective basic transmission.

	Reverse transmission
Weight	The total weight of the transmission depends on the transmission version and the special equipment contained in the scope of supply. The respective total weight is specified on the type plate on the transmission.
Transmission ratio	The ratio of the transmission is specified on the type plate on the transmission.
Clutch nominal pressure	17 bar for transmission type ZF 3050 D 19 bar for transmission type ZF 3055 D 21.5 bar for transmission type ZF 3060 D
Permissible clutch oil pressure range during operation	16-20 bar for transmission type ZF 3050 D in counter-rotation or enginewise rotation shift position 18-22 bar for transmission type ZF 3055 D in counter-rotation or enginewise rotation shift position 20.5-24.5 bar for transmission type ZF 3060 D in counter-rotation or enginewise rotation shift position 3.5-14 bar in neutral shift position
Lubricating oil pressure	0.4-13 bar
Oil sump temperature during operation	30-90°C
Thrust bearing nominal temperature	30-110°C
Temperature range in the machine room	5-50°C
Maximum permissible water pressure on the cooling water inlet of the transmission oil cooler	4 bar
Maximum permissible cooling water inlet temperature	35°C for application group P, L, M 50°C for application group C
Minimum permissible cooling water flow rate	3,000 dm^3/h
Maximum permissible cooling water flow rate	11,000 dm^3/h
Pressure loss between the cooling water inlet and the cooling water outlet at the maximum permissible cooling water flow rate	0.3 bar
Filter size of the suction filter on the water end	3 mm
Oil quantity	31 dm^3
Oil grade[6)]	Refer to ZF List of Lubricants TE-ML 04.
Output shaft inclination angle	0°
Maximum permissible operating lean angle based on the water level	Fore and aft ±25° Athwartship ±35°

Tab. 7 Technical Data of transmission types ZF 3050 D, ZF 3055 D and ZF 3060 D

6) The valid ZF List of Lubricants TE-ML 04 can be downloaded as a PDF document free of charge at www.zf.com .

4.6 Technical Data for transmission types ZF 3310, ZF 3350, ZF 3355, ZF 3360, ZF 3370, ZF 3310 NR, ZF 3350 NR, ZF 3355 NR, ZF 3360 NR and ZF 3370 NR

The Technical Data is summarized in the following table and is valid for the respective basic transmission.

	Reverse transmission	NR transmission
Weight	The total weight of the transmission depends on the transmission version and the special equipment contained in the scope of supply. The respective total weight is specified on the type plate on the transmission.	
Transmission ratio	The ratio of the transmission is specified on the type plate on the transmission.	
Nominal clutch pressure	17 bar for transmission types ZF 3310, ZF 3350, ZF 3310 NR, ZF 3350 NR 19 bar for transmission types ZF 3355, ZF 3355 NR 21.5 bar for transmission types ZF 3360, ZF 3370, ZF 3360 NR, ZF 3370 NR	
Permissible clutch oil pressure range during operation	16-20 bar for transmission types ZF 3310, ZF 3350, ZF 3310 NR, ZF 3350 NR in counter-rotation or enginewise rotation shift position 18-22 bar for transmission types ZF 3355, ZF 3355 NR in counter-rotation or enginewise rotation shift position 20.5-24.5 bar for transmission types ZF 3360, ZF 3370, ZF 3360 NR, ZF 3370 NR in the counter-rotation or enginewise rotation shift position 3.5-14 bar in neutral shift position	
Lubricating oil pressure	0.4-13 bar	
Oil sump temperature during operation	30-90°C	
Thrust bearing nominal temperature	30-110°C	
Temperature range in the machine room	5-50°C	
Maximum permissible water pressure on the cooling water inlet of the transmission oil cooler	4 bar	
Maximum permissible cooling water inlet temperature	35°C for application group P, L, M 50°C for application group C	
Minimum permissible cooling water flow rate	5,000 dm^3/h for transmission types ZF 3310, ZF 3350, ZF 3355, ZF 3360, ZF 3310 NR, ZF 3350 NR, ZF 3355 NR, ZF 3360 NR 3,000 dm^3/h for transmission types ZF 3370, ZF 3370 NR	
Maximum permissible cooling water flow rate	13,000 dm^3/h for transmission types ZF 3310, ZF 3350, ZF 3355, ZF 3360, ZF 3310 NR, ZF 3350 NR, ZF 3355 NR, ZF 3360 NR 11,000 dm^3/h for transmission types ZF 3370, ZF 3370 NR	
Pressure loss between the cooling water inlet and the cooling water outlet at the maximum permissible cooling water flow rate	0.3 bar	
Filter size of the suction filter on the water end	3 mm	
Oil quantity	36 dm^3	

	Reverse transmission	NR transmission
Oil grade[7)]	Refer to ZF List of Lubricants TE-ML 04.	
Output shaft inclination angle	0°	
Maximum permissible operating lean angle based on the water level	Fore and aft ±25° Athwartship ±35°	

Tab. 8 Technical Data of transmission types ZF 3310, ZF 3350, ZF 3355, ZF 3360, ZF 3370, ZF 3310 NR, ZF 3350 NR, ZF 3355 NR, ZF 3360 NR and ZF 3370 NR

7) The valid ZF List of Lubricants TE-ML 04 can be downloaded as a PDF document free of charge at www.zf.com .

4.7 Technical Data for transmission types ZF 3310 NC, ZF 3350 NC, ZF 3355 NC, ZF 3360 NC with enginewise rotation direction

The Technical Data are summarized in the following table and are valid for the respective basic transmission.

	NC transmission
Weight	The total weight of the transmission depends on the transmission version and the special equipment contained in the scope of supply. The respective total weight is specified on the type plate on the transmission.
Transmission ratio	The ratio of the transmission is specified on the type plate on the transmission.
Lubricating oil pressure	0.4-14 bar
Oil sump temperature during operation	30-90°C
Temperature range in the machine room	5-50°C
Maximum permissible water pressure on the cooling water inlet of the transmission oil cooler	4 bar
Maximum permissible cooling water inlet temperature	35°C for application group P, L, M 50°C for application group C
Minimum permissible cooling water flow rate	5,000 dm^3/h
Maximum permissible cooling water flow rate	13,000 dm^3/h
Pressure loss between the cooling water inlet and the cooling water outlet at the maximum permissible cooling water flow rate	0.3 bar
Filter size of the suction filter on the water end	3 mm
Oil quantity	36 dm^3
Oil grade[8)]	Refer to ZF List of Lubricants TE-ML 04.
Output shaft inclination angle	0°
Maximum permissible operating lean angle based on the water level	Fore and aft ±25° Athwartship ±35°

Tab. 9 Technical Data of transmission types ZF 3310 NC, ZF 3350 NC, ZF 3355 NC, ZF 3360 NC with enginewise rotation direction

8) The valid ZF List of Lubricants TE-ML 04 can be downloaded as a PDF document free of charge at www.zf.com .

4.8 Technical Data for transmission types ZF 3311, ZF 3351, ZF 3356, ZF 3361, ZF W3310, ZF W3350, ZF W3355, ZF 3311 NR, ZF 3351 NR, ZF 3356 NR, ZF 3361 NR, ZF W3310 NR, ZF W3350 NR and ZF W3355 NR

The Technical Data is summarized in the following table and is valid for the respective basic transmission.

	Reverse transmission	NR transmission
Weight	The total weight of the transmission depends on the transmission version and the special equipment contained in the scope of supply. The respective total weight is specified on the type plate on the transmission.	
Transmission ratio	The ratio of the transmission is specified on the type plate on the transmission.	
Clutch nominal pressure	17 bar for transmission types ZF 3311, ZF 3351, ZF W3310, ZF W3350, ZF 3311 NR, ZF 3351 NR, ZF W3310 NR, ZF W3350 NR 19 bar for transmission types ZF 3356, ZF W3355, ZF 3356 NR, ZF W3355 NR 21.5 bar for transmission types ZF 3361, ZF 3361 NR	
Permissible clutch oil pressure range during operation	16-20 bar for transmission types ZF 3311, ZF 3351, ZF W3310, ZF W3350, ZF 3311 NR, ZF 3351 NR, ZF W3310 NR, ZF W3350 NR in counter-rotation or enginewise rotation shift position 18-22 bar for transmission types ZF 3356, ZF W3355, ZF 3356 NR, ZF W3355 NR in counter-rotation or enginewise rotation shift position 20.5-24.5 bar for transmission types ZF 3361, ZF 3361 NR in counter-rotation or enginewise rotation shift position 3.5-14 bar in neutral shift position	
Lubricating oil pressure	0.4-13 bar	
Oil sump temperature during operation	30-90°C	
Thrust bearing nominal temperature	30-110°C	
Temperature range in the machine room	5-50°C	
Maximum permissible water pressure on the cooling water inlet of the transmission oil cooler	4 bar	
Maximum permissible cooling water inlet temperature	35°C for application group M 50°C for application group C	
Minimum permissible cooling water flow rate	3,000 dm^3/h	
Maximum permissible cooling water flow rate	11,000 dm^3/h	
Pressure loss between the cooling water inlet and the cooling water outlet at the maximum permissible cooling water flow rate	0.3 bar	
Filter size of the suction filter on the water end	3 mm	
Oil quantity	38 dm^3	

	Reverse transmission	NR transmission
Oil grade[9)]	Refer to ZF List of Lubricants TE-ML 04.	
Output shaft inclination angle	0°	
Maximum permissible operating lean angle based on the water level	Fore and aft ±25° Athwartship ±35°	

Tab. 10 Technical Data of transmission types ZF 3311, ZF 3351, ZF 3356, ZF 3361, ZF W3310, ZF W3350, ZF W3355, ZF 3311 NR, ZF 3351 NR, ZF 3356 NR, ZF 3361 NR, ZF W3310 NR, ZF W3350 NR and ZF W3355 NR

9) The valid ZF List of Lubricants TE-ML 04 can be downloaded as a PDF document free of charge at www.zf.com .

4.9 Technical Data for transmission types ZF 3311 NC, ZF 3351 NC, ZF 3356 NC, ZF 3361 NC, ZF W3310 NC, ZF W3350 NC, ZF W3355 NC with counter-rotation direction

The Technical Data are summarized in the following table and are valid for the respective basic transmission.

	NC transmission
Weight	The total weight of the transmission depends on the transmission version and the special equipment contained in the scope of supply. The respective total weight is specified on the type plate on the transmission.
Transmission ratio	The ratio of the transmission is specified on the type plate on the transmission.
Lubricating oil pressure	0.4-14 bar
Oil sump temperature during operation	30-90°C
Temperature range in the machine room	5-50°C
Maximum permissible water pressure on the cooling water inlet of the transmission oil cooler	4 bar
Maximum permissible cooling water inlet temperature	35°C for application group M 50°C for application group C
Minimum permissible cooling water flow rate	3,000 dm^3/h
Maximum permissible cooling water flow rate	11,000 dm^3/h
Pressure loss between the cooling water inlet and the cooling water outlet at the maximum permissible cooling water flow rate	0.3 bar
Filter size of the suction filter on the water end	3 mm
Oil quantity	38 dm^3
Oil grade[10)]	Refer to ZF List of Lubricants TE-ML 04.
Output shaft inclination angle	0°
Maximum permissible operating lean angle based on the water level	Fore and aft ±25° Athwartship ±35°

Tab. 11 Technical Data of transmission types ZF 3311 NC, ZF 3351 NC, ZF 3356 NC, ZF 3361 NC, ZF W3310 NC, ZF W3350 NC, ZF W3355 NC with counter-rotation direction

[10)] The valid ZF List of Lubricants TE-ML 04 can be downloaded as a PDF document free of charge at www.zf.com .

4.10 Technical Data for transmission types ZF 3311, ZF 3351, ZF 3356, ZF 3361, ZF W3310, ZF W3350, ZF W3355, ZF 3311 NR, ZF 3351 NR, ZF 3356 NR, ZF 3361 NR, ZF W3310 NR, ZF W3350 NR, ZF W3355 NR with power take-in

The Technical Data is summarized in the following table and is valid for the respective basic transmission.

	Reverse transmission	NR transmission
Weight	The total weight of the transmission depends on the transmission version and the special equipment contained in the scope of supply. The respective total weight is specified on the type plate on the transmission.	
Transmission ratio	The ratio of the transmission is specified on the type plate on the transmission.	
Nominal clutch pressure	17 bar for the basic transmission of transmission types ZF 3311, ZF 3351, ZF W3310, ZF W3350, ZF 3311 NR, ZF 3351 NR, ZF W3310 NR, ZF W3350 NR 20.5 bar for the power take-in 19 bar for the basic transmission of transmission types ZF 3356, ZF W3355, ZF 3356 NR, ZF W3355 NR 20.5 bar for the power take-in 21.5 bar for the basic transmission of transmission types ZF 3361, ZF 3361 NR 20.5 bar for the power take-in	
Permissible clutch oil pressure range during operation	16-20 bar for transmission types ZF 3311, ZF 3351, ZF W3310, ZF W3350, ZF 3311 NR, ZF 3351 NR, ZF W3310 NR, ZF W3350 NR in counter-rotation or enginewise rotation shift position 18-22 bar for transmission types ZF 3356, ZF W3355, ZF 3356 NR, ZF W3355 NR in the counter-rotation or enginewise rotation shift position 20.5-24.5 bar for transmission types ZF 3361, ZF 3361 NR in the counter-rotation or enginewise rotation shift position 3.5-14 bar in neutral shift position	
Permissible clutch oil pressure range during operation with power take-in	19.5-30 bar	
Lubricating oil pressure	0.4-13 bar	
Lubricating oil pressure during operation with power take-in	0.4-16 bar	
Oil sump temperature during operation	30-90°C	
Oil sump temperature during operation with power take-in	30-90°C	
Thrust bearing nominal temperature	30-110°C	
Temperature range in the machine room	5-50°C	
Maximum permissible water pressure on the cooling water inlet of the transmission oil cooler	4 bar	
Maximum permissible cooling water inlet temperature	35°C for application group M 50°C for application group C	
Minimum permissible cooling water flow rate	3,000 dm^3/h	
Maximum permissible cooling water flow rate	11,000 dm^3/h	

	Reverse transmission	NR transmission
Pressure loss between the cooling water inlet and the cooling water outlet at the maximum permissible cooling water flow rate	0.3 bar	
Filter size of the suction filter on the water end	3 mm	
Oil quantity	38 dm^3	
Oil grade[11)]	Refer to ZF List of Lubricants TE-ML 04.	
Output shaft inclination angle	0°	
Maximum permissible operating lean angle based on the water level	Fore and aft ±25° Athwartship ±35°	
Maximum permissible cooling water inlet temperature for power take-in	35°C	
Permissible cooling water flow rate during operation with power take-in	2,000-3,000 dm^3/h	

Tab. 12 Technical Data of transmission types ZF 3311, ZF 3351, ZF 3356, ZF 3361, ZF W3310, ZF W3350, ZF W3355, ZF 3311 NR, ZF 3351 NR, ZF 3356 NR, ZF 3361 NR, ZF W3310 NR, ZF W3350 NR, ZF W3355 NR with power take-in

[11)] The valid ZF List of Lubricants TE-ML 04 can be downloaded as a PDF document free of charge at www.zf.com .

4.11 Technical Data for transmission types ZF 3311, ZF 3351, ZF 3356, ZF 3361, ZF W3310, ZF W3350, ZF W3355, ZF 3311 NR, ZF 3351 NR, ZF 3356 NR, ZF 3361 NR, ZF W3310 NR, ZF W3350 NR, ZF W3355 NR with shaft brake

The Technical Data are summarized in the following table and are valid for the respective basic transmission.

	Reverse transmission	NR transmission
Weight	The total weight of the transmission depends on the transmission version and the special equipment contained in the scope of supply. The respective total weight is specified on the type plate on the transmission.	
Transmission ratio	The ratio of the transmission is specified on the type plate on the transmission.	
Nominal clutch pressure	17 bar for the basic transmission of transmission types ZF 3311, ZF 3351, ZF W3310, ZF W3350, ZF 3311 NR, ZF 3351 NR, ZF W3310 NR, ZF W3350 NR 16 bar for the shaft brake 19 bar for the basic transmission of transmission types ZF 3356, ZF W3355, ZF 3356 NR, ZF W3355 NR 16 bar for the shaft brake 21.5 bar for the basic transmission of transmission types ZF 3361, ZF 3361 NR 16 bar for the shaft brake	
Permissible clutch oil pressure range during operation	16-20 bar for transmission types ZF 3311, ZF 3351, ZF W3310, ZF W3350, ZF 3311 NR, ZF 3351 NR, ZF W3310 NR, ZF W3350 NR in counter-rotation or enginewise rotation shift position 18-22 bar for transmission types ZF 3356, ZF W3355, ZF 3356 NR, ZF W3355 NR in the counter-rotation or enginewise rotation shift position 20.5-24.5 bar for transmission types ZF 3361, ZF 3361 NR in the counter-rotation or enginewise rotation shift position 3.5-14 bar in neutral shift position	
Permissible system oil pressure range for shaft brake	18-24 bar	
Lubricating oil pressure	0.4-13 bar	
Oil sump temperature during operation	30-90°C	
Thrust bearing nominal temperature	30-110°C	
Temperature range in the machine room	5-50°C	
Maximum permissible water pressure on the cooling water inlet of the transmission oil cooler	4 bar	
Maximum permissible cooling water inlet temperature	35°C for application group M 50°C for application group C	
Minimum permissible cooling water flow rate	3,000 dm^3/h	
Maximum permissible cooling water flow rate	11,000 dm^3/h	
Pressure loss between the cooling water inlet and the cooling water outlet at the maximum permissible cooling water flow rate	0.3 bar	
Filter size of the suction filter on the water end	3 mm	

	Reverse transmission	NR transmission
Oil quantity	38 dm^3	
Oil grade[12)]	Refer to ZF List of Lubricants TE-ML 04.	
Output shaft inclination angle	0°	
Maximum permissible operating lean angle based on the water level	Fore and aft ±25° Athwartship ±35°	

Tab. 13 Technical Data for transmission types ZF 3311, ZF 3351, ZF 3356, ZF 3361, ZF W3310, ZF W3350, ZF W3355, ZF 3311 NR, ZF 3351 NR, ZF 3356 NR, ZF 3361 NR, ZF W3310 NR, ZF W3350 NR, ZF W3355 NR with brake shaft

[12)] The valid ZF List of Lubricants TE-ML 04 can be downloaded as a PDF document free of charge at www.zf.com .

4.12 Technical Data for transmission types ZF 3711, ZF 3751, ZF 3756, ZF 3761, ZF W3710, ZF W3750, ZF W3755, ZF 3711 NR, ZF 3751 NR, ZF 3756 NR, ZF 3761 NR, ZF W3710 NR, ZF W3750 NR and ZF W3755 NR

The Technical Data is summarized in the following table and is valid for the respective basic transmission.

	Reverse transmission	NR transmission
Weight	The total weight of the transmission depends on the transmission version and the special equipment contained in the scope of supply. The respective total weight is specified on the type plate on the transmission.	
Transmission ratio	The ratio of the transmission is specified on the type plate on the transmission.	
Nominal clutch pressure	17 bar for transmission types ZF 3711, ZF 3751, ZF W3710, ZF W3750, ZF 3711 NR, ZF 3751 NR, ZF W3710 NR, ZF W3750 NR 19 bar for transmission types ZF 3756, ZF W3755, ZF 3756 NR, ZF W3755 NR 21.5 bar for transmission types ZF 3761, ZF 3761 NR	
Permissible clutch oil pressure range during operation	16-20 bar for transmission types ZF 3711, ZF 3751, ZF W3710, ZF W3750, ZF 3711 NR, ZF 3751 NR, ZF W3710 NR, ZF W3750 NR in counter-rotation or enginewise rotation shift position 18-22 bar for transmission types ZF 3756, ZF W3755, ZF 3756 NR, ZF W3755 NR in the counter-rotation or enginewise rotation shift position 20.5-24.5 bar for transmission types ZF 3761, ZF 3761 NR in the counter-rotation or enginewise rotation shift position 3.5-14 bar in neutral shift position	
Lubricating oil pressure	0.4-13 bar	
Oil sump temperature during operation	30-90°C	
Thrust bearing nominal temperature	30-110°C	
Temperature range in the machine room	5-50°C	
Maximum permissible water pressure on the cooling water inlet of the transmission oil cooler	4 bar	
Maximum permissible cooling water inlet temperature	35°C for application group M 50°C for application group C	
Minimum permissible cooling water flow rate	3,000 dm^3/h	
Maximum permissible cooling water flow rate	11,000 dm^3/h	
Pressure loss between the cooling water inlet and the cooling water outlet at the maximum permissible cooling water flow rate	0.3 bar	
Filter size of the suction filter on the water end	3 mm	
Oil quantity	38 dm^3 for transmission types ZF 3711, ZF 3751, ZF 3756, ZF 3761, ZF W3710, ZF W3750, ZF 3711 NR, ZF 3751 NR, ZF 3756 NR, ZF 3761 NR, ZF W3710 NR, ZF W3750 NR 41 dm^3 for transmission types ZF W3755, ZF W3755 NR	

	Reverse transmission	NR transmission
Oil grade[13)]	Refer to ZF List of Lubricants TE-ML 04.	
Output shaft inclination angle	0°	
Maximum permissible operating lean angle based on the water level	Fore and aft ±25° Athwartship ±35°	

Tab. 14 Technical Data of transmission types ZF 3711, ZF 3751, ZF 3756, ZF 3761, ZF W3710, ZF W3750, ZF W3755, ZF 3711 NR, ZF 3751 NR, ZF 3756 NR, ZF 3761 NR, ZF W3710 NR, ZF W3750 NR and ZF W3755 NR

[13)] The valid ZF List of Lubricants TE-ML 04 can be downloaded as a PDF document free of charge at www.zf.com .

4.13 Monitoring values for the ZF 3000 family

The ZF scope of supply of the monitoring devices is stipulated in the technical documents valid for the respective order.

A master monitoring system is required to process the signals issued by the monitoring devices, e.g. warning signals. This monitoring system is not part of the ZF scope of supply.

Measuring point	Operating state	Warning		Shift point	Monitoring devices[14] 15) 16) 17) 18)
Filter contamination (127)	Operation	5 bar ↑		---	Differential pressure switch
Clutch oil pressure (2), (21), (27)	Operation in the counter-rotation or enginewise rotation shift position	$p_K = p_{KN}$-2 bar ↓		Engine shut down: $p_K = p_{KN}$ - 3 bar ↓ at a nominal clutch pressure of 17 bar and 21.5 bar $p_K = p_{KN}$ - 3.5 bar ↓ at a nominal clutch pressure of 19 bar	Pressure gauge 0-40 bar Pressure sensor 0-30 bar Pressure switch
Lubricating oil pressure (22)	Operation	0.25 bar ↓		---	Pressure sensor 0-16 bar
		Optional:			
		0.3 bar ↓	Minimum engine speed		
		0.5 bar ↓	800 rpm		
		1.5 bar ↓	1,200 rpm		
		2.3 bar ↓	1,600 rpm		
		3.2 bar ↓	2,000 rpm		
		3.2 bar ↓	Maximum engine speed		
Clutch position indicator for the counter-rotation shift position (38)	Operation	---		13 bar ↑	Pressure switch
Clutch position indicator for the enginewise rotation shift position (39)	Operation	---			

[14] Take the warning or engine shut down in trolling mode and in the neutral shift position out of operation, this applies to measuring points (2), (21) and (27).
[15] No response in trolling mode, this applies to measuring points (38) and (39).
[16] Take the warning for an oil temperature <35°C out of operation on the customer side, this applies to measuring point (127).
[17] Warning occurs with a time delay of 5 to 10 s, this applies to measuring points (127), (22) and (128).
[18] Warning or engine shut down occurs with a time delay of 5 to 10 s, this applies to measuring points (2), (21) and (27).

Measuring point	Operating state	Warning	Shift point	Monitoring devices[14)] [15)] [16)] [17)] [18)]
Oil sump temperature (11), (12), (41)	Operation	95°C ↑	---	Thermometer 0-120°C Temperature sensor 0-120°C
Oil temperature downstream of transmission oil cooler (53)	Operation	---	---	Thermometer 0-120°C
Thrust bearing temperature (128)	Operation	115°C ↑	---	Temperature sensor 0-120°C

Tab. 15 Monitoring values of the ZF 3000 family

p_K Clutch oil pressure

p_{KN} Nominal clutch pressure

[14)] Take the warning or engine shut down in trolling mode and in the neutral shift position out of operation, this applies to measuring points (2), (21) and (27).
[15)] No response in trolling mode, this applies to measuring points (38) and (39).
[16)] Take the warning for an oil temperature <35°C out of operation on the customer side, this applies to measuring point (127).
[17)] Warning occurs with a time delay of 5 to 10 s, this applies to measuring points (127), (22) and (128).
[18)] Warning or engine shut down occurs with a time delay of 5 to 10 s, this applies to measuring points (2), (21) and (27).

4.14 Monitoring values for the ZF 3000 NC (counter-rotation) family

The ZF scope of supply of the monitoring devices is stipulated in the technical documents valid for the respective order.

A master monitoring system is required to process the signals issued by the monitoring devices, e.g. warning signals. This monitoring system is not part of the ZF scope of supply.

Measuring point	Operating state	Warning	Shift point	Monitoring devices
Lubricating oil pressure (22)	Operation	0.25 bar ↓	---	Pressure gauge 0-10 bar Pressure sensor 0-16 bar
Oil sump temperature (11), (41)	Operation	95°C ↑	---	Thermometer 0-120°C Temperature sensor 0-120°C
Oil temperature downstream of transmission oil cooler (53)	Operation	---	---	Thermometer 0-120°C

Tab. 16 Monitoring values of the ZF 3000 NC (counter-rotation) family

4.15 Monitoring values for the ZF 3300 family and ZF W3300 family

The ZF scope of supply of the monitoring devices is stipulated in the technical documents valid for the respective order.

A master monitoring system is required to process the signals issued by the monitoring devices, e.g. warning signals. This monitoring system is not part of the ZF scope of supply.

Measuring point	Operating state	Warning		Shift point	Monitoring devices[19) 20) 21) 22) 23)]
Filter contamination (127)	Operation	5 bar ↑		---	Differential pressure switch
Clutch oil pressure (2), (21), (27)	Operation in the counter-rotation or enginewise rotation shift position	$p_K = p_{KN}$-2 bar ↓		Engine shut down: $p_K = p_{KN}$ - 3 bar ↓ at a nominal clutch pressure of 17 bar and 21.5 bar $p_K = p_{KN}$ - 3.5 bar ↓ at a nominal clutch pressure of 19 bar	Pressure gauge 0-40 bar Pressure sensor 0-30 bar Pressure switch
Lubricating oil pressure (22)	Operation	0.25 bar ↓		---	Pressure sensor 0-16 bar
		Optional:			
		0.3 bar ↓	Minimum engine speed		
		0.5 bar ↓	800 rpm		
		1.5 bar ↓	1,200 rpm		
		2.3 bar ↓	1,600 rpm		
		3.2 bar ↓	2,000 rpm		
		3.2 bar ↓	Maximum engine speed		
Clutch position indicator for the counter-rotation shift position (38)	Operation	---		13 bar ↑	Pressure switch
Clutch position indicator for the enginewise rotation shift position (39)	Operation	---			

19) Take the warning or engine shut down in trolling mode and in the neutral shift position out of operation, this applies to measuring points (2), (21) and (27).
20) No response in trolling mode, this applies to measuring points (38) and (39).
21) Take the warning for an oil temperature <35°C out of operation on the customer side, this applies to measuring point (127).
22) Warning occurs with a time delay of 5 to 10 s, this applies to measuring points (127), (22) and (128).
23) Warning or engine shut down occurs with a time delay of 5 to 10 s, this applies to measuring points (2), (21) and (27).

Measuring point	Operating state	Warning	Shift point	Monitoring devices[19)] [20)] [21)] [22)] [23)]
Oil sump temperature (11), (12), (41)	Operation	95°C ↑	---	Thermometer 0-120°C Temperature sensor 0-120°C
Oil temperature downstream of transmission oil cooler (53)	Operation	---	---	Thermometer 0-120°C
Thrust bearing temperature (128)	Operation	115°C ↑	---	Temperature sensor 0-120°C

Tab. 17 Monitoring values of the ZF 3300 family and ZF W3300 family

p_K Clutch oil pressure

p_{KN} Nominal clutch pressure

[19)] Take the warning or engine shut down in trolling mode and in the neutral shift position out of operation, this applies to measuring points (2), (21) and (27).
[20)] No response in trolling mode, this applies to measuring points (38) and (39).
[21)] Take the warning for an oil temperature <35°C out of operation on the customer side, this applies to measuring point (127).
[22)] Warning occurs with a time delay of 5 to 10 s, this applies to measuring points (127), (22) and (128).
[23)] Warning or engine shut down occurs with a time delay of 5 to 10 s, this applies to measuring points (2), (21) and (27).

4.16 Monitoring values for the ZF 3300 NC (enginewise rotation) family with aluminum housing

The ZF scope of supply of the monitoring devices is stipulated in the technical documents valid for the respective order.

A master monitoring system is required to process the signals issued by the monitoring devices, e.g. warning signals. This monitoring system is not part of the ZF scope of supply.

Measuring point	Operating state	Warning		Shift point	Monitoring devices
Lubricating oil pressure (22)	Operation	0.25 bar ↓		---	Pressure gauge 0-10 bar Pressure sensor 0-16 bar
		Optional:			
		0.3 bar ↓	Minimum engine speed		
		0.5 bar ↓	800 rpm		
		1.5 bar ↓	1,200 rpm		
		2.3 bar ↓	1,600 rpm		
		3.2 bar ↓	2,000 rpm		
		3.2 bar ↓	Maximum engine speed		
Oil sump temperature (11), (41)	Operation	95°C ↑		---	Thermometer 0-120°C Temperature sensor 0-120°C
Oil temperature downstream of transmission oil cooler (53)	Operation	---		---	Thermometer 0-120°C

Tab. 18 Monitoring values for the ZF 3300 NC (enginewise rotation) family with aluminum housing

4.17 Monitoring values for the ZF 3300 NC (counter-rotation) family with gray cast iron housing

The ZF scope of supply of the monitoring devices is stipulated in the technical documents valid for the respective order.

A master monitoring system is required to process the signals issued by the monitoring devices, e.g. warning signals. This monitoring system is not part of the ZF scope of supply.

Measuring point	Operating state	Warning		Shift point	Monitoring devices
Lubricating oil pressure (22)	Operation	0.25 bar ↓		---	Pressure gauge 0-10 bar Pressure sensor 0-16 bar
		Optional:			
		0.3 bar ↓	Minimum engine speed		
		0.5 bar ↓	800 rpm		
		1.5 bar ↓	1,200 rpm		
		2.3 bar ↓	1,600 rpm		
		3.2 bar ↓	2,000 rpm		
		3.2 bar ↓	Maximum engine speed		
Oil sump temperature (11)	Operation	95°C ↑		---	Thermometer 0-120°C Temperature sensor 0-120°C
Oil temperature downstream of transmission oil cooler (53)	Operation	---		---	Thermometer 0-120°C

Tab. 19 Monitoring values of the ZF 3300 NC (counter-rotation) family gray cast iron housing

4.18 Monitoring values for the ZF W3300 NC (counter-rotation) family

The ZF scope of supply of the monitoring devices is stipulated in the technical documents valid for the respective order.

A master monitoring system is required to process the signals issued by the monitoring devices, e.g. warning signals. This monitoring system is not part of the ZF scope of supply.

Measuring point	Operating state	Warning		Shift point	Monitoring devices
Lubricating oil pressure (22)	Operation	0.25 bar ↓		---	Pressure gauge 0-10 bar Pressure sensor 0-16 bar
		Optional:			
		0.3 bar ↓	Minimum engine speed		
		0.5 bar ↓	800 rpm		
		1.5 bar ↓	1,200 rpm		
		2.3 bar ↓	1,600 rpm		
		3.2 bar ↓	2,000 rpm		
		3.2 bar ↓	Maximum engine speed		
Oil sump temperature (11)	Operation	95°C ↑		---	Thermometer 0-120°C Temperature sensor 0-120°C
Oil temperature downstream of transmission oil cooler (53)	Operation	---		---	Thermometer 0-120°C

Tab. 20 Monitoring values of the ZF W3300 NC (counter-rotation) family

4.19 Monitoring values for the ZF 3300 family and ZF W3300 family with power take-in

The ZF scope of supply of the monitoring devices is stipulated in the technical documents valid for the respective order.

A master monitoring system is required to process the signals issued by the monitoring devices, e.g. warning signals. This monitoring system is not part of the ZF scope of supply.

Measuring point	Operating state	Warning		Shift point	Monitoring devices[24) 25) 26) 27) 28)]
Filter contamination (127)	Operation	5 bar ↑		---	Differential pressure switch
Clutch oil pressure (2), (21), (27)	Operation in the counter-rotation or enginewise rotation shift position	$p_K = p_{KN}$-2 bar ↓		Engine shut down: $p_K = p_{KN}$ - 3 bar ↓ at a nominal clutch pressure of 17 bar and 21.5 bar $p_K = p_{KN}$ - 3.5 bar ↓ at a nominal clutch pressure of 19 bar	Pressure gauge 0-40 bar Pressure sensor 0-30 bar Pressure switch
Clutch oil pressure of power take-in (266), (267)	Operation with power take-in	$p_K = p_{KN}$-2 bar ↓		Engine shut down: $p_K = p_{KN}$ - 3 bar ↓	Pressure sensor 0-30 bar Pressure switch
Lubricating oil pressure (22)	Operation	0.25 bar ↓		---	Pressure sensor 0-16 bar
		Optional:			
		0.3 bar ↓	Minimum engine speed		
		0.5 bar ↓	800 rpm		
		1.5 bar ↓	1,200 rpm		
		2.3 bar ↓	1,600 rpm		
		3.2 bar ↓	2,000 rpm		
		3.2 bar ↓	Maximum engine speed		
Lubricating oil pressure (22B)	Operation with power take-in	0.3 bar ↓		---	Pressure sensor 0-16 bar

24) Take the warning or engine shut down in trolling mode and in the neutral shift position out of operation, this applies to measuring points (2), (21) and (27).
25) No response in trolling mode, this applies to measuring points (38) and (39).
26) Take the warning for an oil temperature <35°C out of operation on the customer side, this applies to measuring point (127).
27) Warning occurs with a time delay of 5 to 10 s, this applies to measuring points (127), (22), (22B), (266) and(128).
28) Warning or engine shut down occurs with a time delay of 5 to 10 s, this applies to measuring points (2), (21), (27) and (267).

Measuring point	Operating state	Warning	Shift point	Monitoring devices[24) 25) 26) 27) 28)]
Clutch position indicator for the counter-rotation shift position (38)	Operation	---	13 bar ↑	Pressure switch
Clutch position indicator for the enginewise rotation shift position (39)	Operation	---		
Clutch position indicator for the power take-in clutch (155)	Operation with power take-in	---		
Oil sump temperature (11), (41)	Operation	95°C ↑	---	Thermometer 0-120°C Temperature sensor 0-120°C
Oil temperature (12)	Operation with power take-in	95°C ↑	---	Temperature sensor 0-120°C
Oil temperature downstream of transmission oil cooler (53)	Operation	---	---	Thermometer 0-120°C
Thrust bearing temperature (128)	Operation	115°C ↑	---	Temperature sensor 0-120°C

Tab. 21 Monitoring values of the ZF 3300 family and ZF W3300 family with power take-in

p_K Clutch oil pressure

p_{KN} Nominal clutch pressure

24) Take the warning or engine shut down in trolling mode and in the neutral shift position out of operation, this applies to measuring points (2), (21) and (27).
25) No response in trolling mode, this applies to measuring points (38) and (39).
26) Take the warning for an oil temperature <35°C out of operation on the customer side, this applies to measuring point (127).
27) Warning occurs with a time delay of 5 to 10 s, this applies to measuring points (127), (22), (22B), (266) and(128).
28) Warning or engine shut down occurs with a time delay of 5 to 10 s, this applies to measuring points (2), (21), (27) and (267).

4.20 Monitoring values for the ZF 3300 family and ZF W3300 family with shaft brake

The ZF scope of supply of the monitoring devices is stipulated in the technical documents valid for the respective order.

A master monitoring system is required to process the signals issued by the monitoring devices, e.g. warning signals. This monitoring system is not part of the ZF scope of supply.

Measuring point	Operating state	Warning		Shift point	Monitoring devices[29)] [30)] [31)] [32)] [33)]
Filter contamination (127)	Operation	5 bar ↑		---	Differential pressure switch
Clutch oil pressure (2), (21), (27)	Operation in the counter-rotation or enginewise rotation shift position	$p_K = p_{KN}$-2 bar ↓		Engine shut down: $p_K = p_{KN}$ - 3 bar ↓ at a nominal clutch pressure of 17 bar and 21.5 bar $p_K = p_{KN}$ - 3.5 bar ↓ at a nominal clutch pressure of 19 bar	Pressure gauge 0-40 bar Pressure sensor 0-30 bar Pressure switch
System oil pressure of shaft brake (272)	Shaft brake	$p_K = p_{KN}$+1 bar ↓		---	Pressure sensor 0-30 bar
Lubricating oil pressure (22)	Operation	0.25 bar ↓		---	Pressure sensor 0-16 bar
		Optional:			
		0.3 bar ↓	Minimum engine speed		
		0.5 bar ↓	800 rpm		
		1.5 bar ↓	1,200 rpm		
		2.3 bar ↓	1,600 rpm		
		3.2 bar ↓	2,000 rpm		
		3.2 bar ↓	Maximum engine speed		
Clutch position indicator for the counter-rotation shift position (38)	Operation	---		13 bar ↑	Pressure switch
Clutch position indicator for the enginewise rotation shift position (39)	Operation	---			
Clutch position indicator for the shaft brake clutch (172)	Shaft brake	---			

29) Take the warning or engine shut down in trolling mode and in the neutral shift position out of operation, this applies to measuring points (2), (21) and (27).
30) No response in trolling mode, this applies to measuring points (38) and (39).
31) Take the warning for an oil temperature <35°C out of operation on the customer side, this applies to measuring point (127).
32) Warning occurs with a time delay of 5 to 10 s, this applies to measuring points (127), (128) and (272).
33) Warning or engine shut down occurs with a time delay of 5 to 10 s, this applies to measuring points (2), (21) and (27).

Measuring point	Operating state	Warning	Shift point	Monitoring devices[29) 30) 31) 32) 33)]
Oil sump temperature (11), (41)	Operation	95°C ↑	---	Thermometer 0-120°C Temperature sensor 0-120°C
Oil temperature downstream of transmission oil cooler (53)	Operation	---	---	Thermometer 0-120°C
Thrust bearing temperature (128)	Operation	115°C ↑	---	Temperature sensor 0-120°C

Tab. 22 Monitoring values for the ZF 3300 family and ZF W3300 family with shaft brake

p_K Clutch oil pressure

p_{KN} Nominal clutch pressure

29) Take the warning or engine shut down in trolling mode and in the neutral shift position out of operation, this applies to measuring points (2), (21) and (27).
30) No response in trolling mode, this applies to measuring points (38) and (39).
31) Take the warning for an oil temperature <35°C out of operation on the customer side, this applies to measuring point (127).
32) Warning occurs with a time delay of 5 to 10 s, this applies to measuring points (127), (128) and (272).
33) Warning or engine shut down occurs with a time delay of 5 to 10 s, this applies to measuring points (2), (21) and (27).

4.21 Monitoring values for the ZF 3700 family and ZF W3700 family

The ZF scope of supply of the monitoring devices is stipulated in the technical documents valid for the respective order.

A master monitoring system is required to process the signals issued by the monitoring devices, e.g. warning signals. This monitoring system is not part of the ZF scope of supply.

Measuring point	Operating state	Warning		Shift point	Monitoring devices[34)] [35) 36) 37) 38)]
Filter contamination (127)	Operation	5 bar ↑		---	Differential pressure switch
Clutch oil pressure (2), (21), (27)	Operation in the counter-rotation or enginewise rotation shift position	$p_K = p_{KN}$-2 bar ↓		Engine shut down: $p_K = p_{KN}$ - 3 bar ↓ at a nominal clutch pressure of 17 bar and 21.5 bar $p_K = p_{KN}$ - 3.5 bar ↓ at a nominal clutch pressure of 19 bar	Pressure gauge 0-40 bar Pressure sensor 0-30 bar Pressure switch
Lubricating oil pressure (22)	Operation	0.25 bar ↓		---	Pressure sensor 0-16 bar
		Optional:			
		0.3 bar ↓	Minimum engine speed		
		0.5 bar ↓	800 rpm		
		1.5 bar ↓	1,200 rpm		
		2.3 bar ↓	1,600 rpm		
		3.2 bar ↓	2,000 rpm		
		3.2 bar ↓	Maximum engine speed		
Clutch position indicator for the counter-rotation shift position (38)	Operation	---		13 bar ↑	Pressure switch
Clutch position indicator for the enginewise rotation shift position (39)	Operation	---			

34) Take the warning or engine shut down in trolling mode and in the neutral shift position out of operation, this applies to measuring points (2), (21) and (27).
35) No response in trolling mode, this applies to measuring points (38) and (39).
36) Take the warning for an oil temperature <35°C out of operation on the customer side, this applies to measuring point (127).
37) Warning occurs with a time delay of 5 to 10 s, this applies to measuring points (127), (22) and (128).
38) Warning or engine shut down occurs with a time delay of 5 to 10 s, this applies to measuring points (2), (21) and (27).

Measuring point	Operating state	Warning	Shift point	Monitoring devices[34)] [35)] [36)] [37)] [38)]
Oil sump temperature (11), (12), (41)	Operation	95°C ↑	---	Thermometer 0-120°C Temperature sensor 0-120°C
Oil temperature downstream of transmission oil cooler (53)	Operation	---	---	Thermometer 0-120°C
Thrust bearing temperature (128)	Operation	115°C ↑	---	Temperature sensor 0-120°C

Tab. 23 Monitoring values of the ZF 3700 family and ZF W3700 family

p_K Clutch oil pressure

p_{KN} Nominal clutch pressure

4.22 Transmission designation

The transmission type plate is on the same side as the output flange and, when installed, is clearly visible.

Fig. 117

1 Position of the type plate

If the transmission requires acceptance by a classification society, the certification number and the seal of the classification society are struck into the transmission directly adjacent to the type plate.

The warranty for the transmission shall become void if the type plate is forged or removed.

34) Take the warning or engine shut down in trolling mode and in the neutral shift position out of operation, this applies to measuring points (2), (21) and (27).
35) No response in trolling mode, this applies to measuring points (38) and (39).
36) Take the warning for an oil temperature <35°C out of operation on the customer side, this applies to measuring point (127).
37) Warning occurs with a time delay of 5 to 10 s, this applies to measuring points (127), (22) and (128).
38) Warning or engine shut down occurs with a time delay of 5 to 10 s, this applies to measuring points (2), (21) and (27).

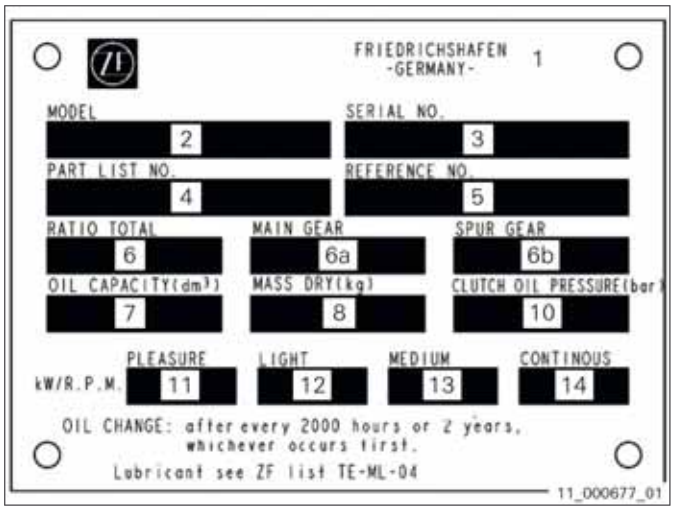

Fig. 118

1 Production location
2 Model
3 Serial number
4 Parts list number
5 Customer part number
6 Overall ratio of the transmission
6a Ratio of the main transmission
6b Ratio of the intermediate gear
7 Oil quantity
8 Dry weight
10 Nominal clutch-oil pressure
11 Maximum ratio between the engine power and the engine speed for intermittent operation with very strongly varying motor speeds
12 Maximum ratio between the engine power and the engine speed for intermittent operation with strongly varying motor speeds
13 Maximum ratio between the engine power and the engine speed for intermittent operation with varying motor speeds
14 Maximum ratio between the engine power and the engine speed for continuous operation with a maximum engine power

4.23 Input shaft direction of rotation

The standard direction of drive rotation is counterclockwise when viewed on the output end of the engine.

If the direction of rotation is clockwise , a directional arrow can be found on the transmission input side.

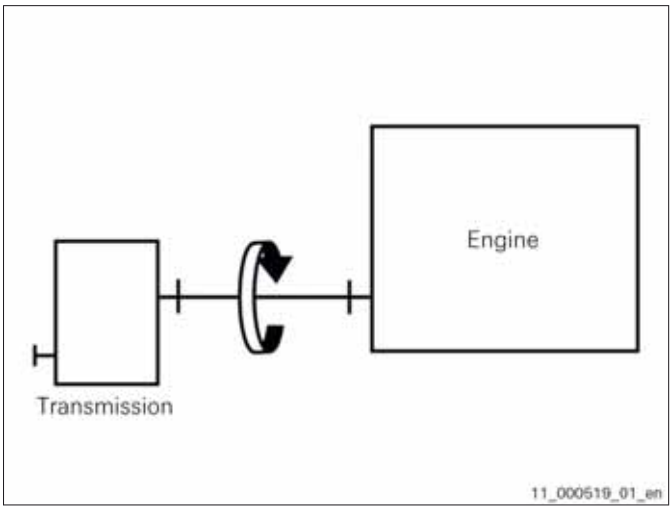

Fig. 119

When connecting to the engine, observe the maximum permissible loads on the transmission input. On the front of the input shaft, the additionally acting forces may not exceed more than 2,800 N in the radial direction and 1,300 N in the axial direction.

4.24 Direction of rotation of propeller when traveling forward

The following figures show the direction of rotation of the propeller when traveling forward .

Depending upon the transmission version, two arrangements are possible:

- Standard engine arrangement
- Engine arrangement of V version and U version

The standard direction of drive rotation is counterclockwise when viewed on the output end of the engine.

If the direction of drive rotation is clockwise , a directional arrow can be found on the transmission input side.

4.24.1 Standard engine arrangement

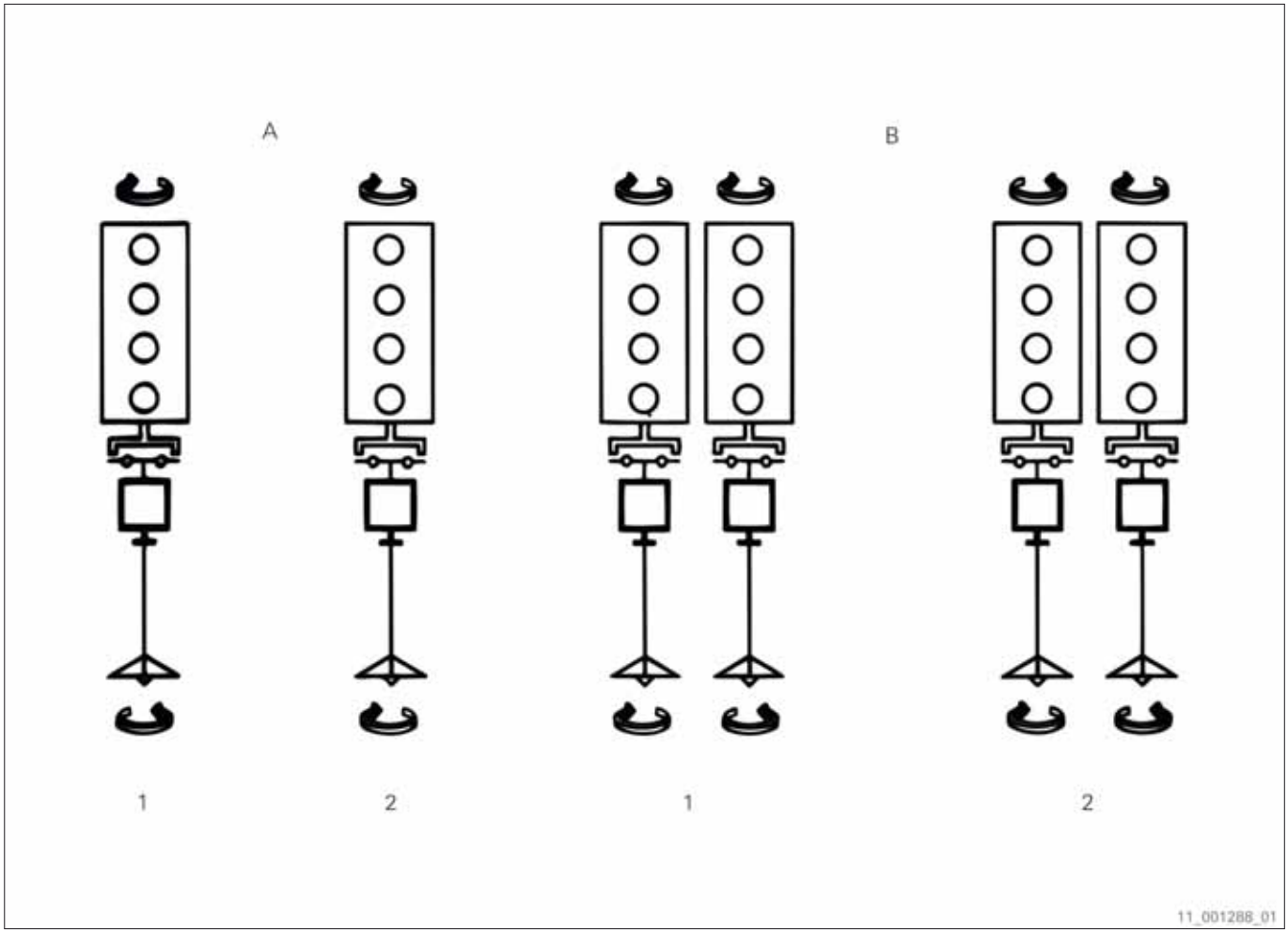

Fig. 120

A Version with one engine
1 Preferred installation

B Version with two engines
2 Permissible installation

4.24.2 Engine arrangement of V version and U version

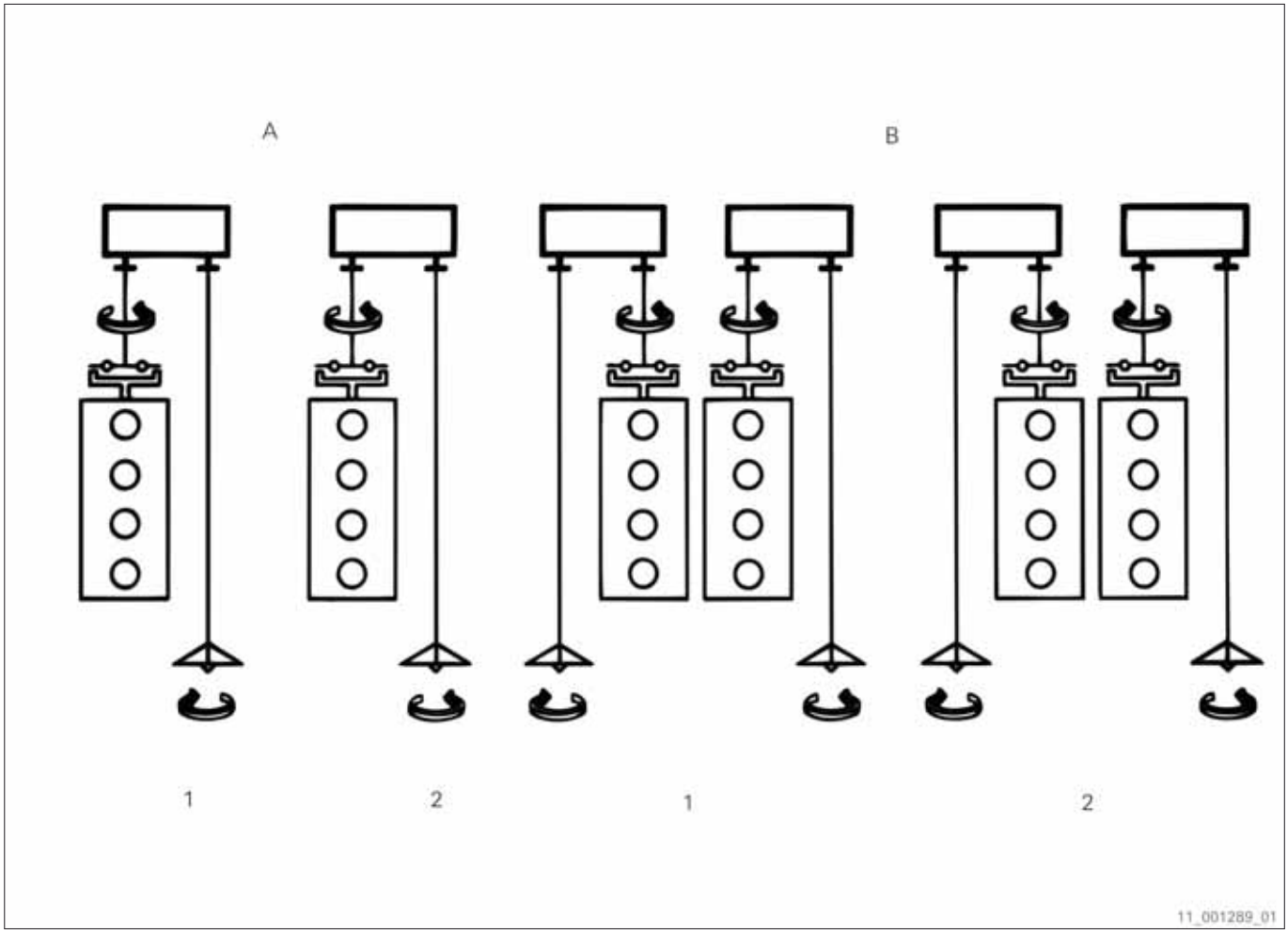

Fig. 121

A Version with one engine
1 Preferred installation

B Version with two engines
2 Permissible installation

4.25 Alignment accuracy of the propshaft

When centering the output flange and the propshaft, a radial force of max. 800 N is permissible for the ZF 3000 family and a radial force of max. 1,500 N for the ZF 3300/3700 family.

The values for the alignment of the output shaft and the propshaft are determined by a propshaft calculation. The propshaft manufacturer usually performs the propshaft calculation.

The transmission data and the maximum permissible radial additional forces on the bearing of the output shaft necessary for the propshaft calculation are stipulated in the Data for the Propshaft Calculation calculation sheet.

If no propshaft calculation is available, use the values from the subsequent table. The values are empirical values.

Transmission version	Center distance V	Center distance H	Maximum permissible misalignment GAP (x) *(refer to section Propshaft alignment, page 145)*	Maximum permissible shaft offset SAG (y) *(refer to section Propshaft alignment, page 145)*	Lowest permissible bearing distance L, depending on diameter d of the propshaft *(refer to section Propshaft alignment, page 145)*
Parallel version ZF 3000 family[39)]	255 mm	0 mm	0.05 mm	0.10 mm	500 mm for d < 110 mm 1,000 mm for d ≥ 110 mm
A version ZF 3000 family[40)]	326.8 mm	0 mm	0.05 mm	0.10 mm	500 mm for d < 110 mm 1,000 mm for d ≥ 110 mm
V version ZF 3000 family[41)]	326.8 mm	0 mm	0.05 mm	0.10 mm	500 mm for d < 110 mm 1,000 mm for d ≥ 110 mm
D version ZF 3000 family[42)]	140.2 mm	213 mm	0.05 mm	0.10 mm	500 mm for d < 110 mm 1,000 mm for d ≥ 110 mm
Parallel version ZF 3300 family[43)]	385 mm	0 mm	0.10 mm	0.15 mm	500 mm for d < 110 mm 1,000 mm for 110 mm ≤ d ≤ 150 mm 2,000 mm for d > 150 mm
Parallel version ZF 3700 family[44)]	445 mm	0 mm	0.10 mm	0.15 mm	500 mm for d < 110 mm 1,000 mm for 110 mm ≤ d ≤ 150 mm 2,000 mm for d > 150 mm

Tab. 24 Alignment accuracy of the propshaft

39) *(refer to fig. 1, page 17)*
40) *(refer to fig. 2, page 17)*
41) *(refer to fig. 3, page 18)*
42) *(refer to fig. 4, page 18)*
43) *(refer to fig. 1, page 17)*
44) *(refer to fig. 1, page 17)*

5 Initial Operation

- Initial operation of the ZF product
- Resuming operation of the ZF product after a prolonged downtime
- Resuming operation of the ZF product after repair

5.1 Initial operation

Before delivery, ZF marine transmissions are tested on the test benches.

The following points are tested and documented during the test run:

- Transmission functions
- Oil pressures
- Temperatures
- Noise behavior

5.1.1 Oil filling and oil level check

The ZF marine transmissions leave the plant without an oil fill. When the transmission is delivered, a respective instruction plate is attached to the transmission.

Each transmission receives an initial fill for the plant functional test. The transmission is subsequently connected to the test bench oil circuit. During the test run, the internal parts of the transmission are preserved with a corrosion protection oil. Consequently, the transmission can be stored in dry rooms for up to twelve months.

The oil grade to be used is specified in the ZF List of Lubricants TE-ML 04. A List of Lubricants valid at the time of transmission delivery is enclosed with the transmission.

In the event that the List of Lubricants is lost, it can be requested from any ZF service branch. Furthermore, the List of Lubricants can be downloaded as a PDF document from the Internet free of charge at www.zf.com.

The required oil quantity is specified on the type plate.

The correct implementation of the oil fill and the oil level check is part of the basic requirements for trouble-free operation *(refer to section Filling oil, page 191)*.

5.1.2 Connection of the monitoring devices

Arrange the equipment required for monitoring in such a manner that the devices can be reliably read at all times, even in unfavorable operating conditions. Select the display scales of the monitoring devices in such a manner that a great pointer deflection is achieved in the operating range. In addition to the supplied monitoring equipment, further display or warning equipment can be connected to measuring points sealed with dummy plugs.

5.1.3 Work prior to initial operation

- Fill the transmission with oil and check the oil level *(refer to section Filling oil, page 191)*.
- Check that screws on the transmission's supporting surfaces and on the ship foundation are firmly in place.
- Check that screws between the propshaft flange and the output flange are firmly in place and secure.
- Check that screws on the transmission input are firmly in place and secure.
- Check the connection of the monitoring devices on the measuring points.
- Check the connection of the transmission oil cooler to the cooling system.
- Open water valves to the transmission oil cooler.
- Check rotating transmission parts for the presence of suitable protective equipment.
- Check transmission components such as tubings, measuring sensors, plugs and electrical connections for damage.
- Check electrical connections at the transmission for complete wiring. Check cable supplies and wire supplies for sealing and insulation.
- Have the electrically operated brake's electrical connections checked for complete wiring by staff specially trained and authorized for handling high-voltage systems. Check cable supplies and wire supplies for sealing and insulation.
- Check hoses, wires and cables for signs of wear.
- In the event of electric transmission actuation, check the operating voltage of 24 V or the current consumption at a suitable location, as close to the plug connections of the solenoids as possible.

5.1.3.1 Filling oil

Requirements:
- Engine is switched off.
- The engine starting mechanism is blocked.

1. Screw out filler plug (1).

2. Use filtered oil.

NOTICE

The use of a non-approved lubricant can lead to property damage.

⇨ Only use lubricant from the currently valid ZF List of Lubricants.

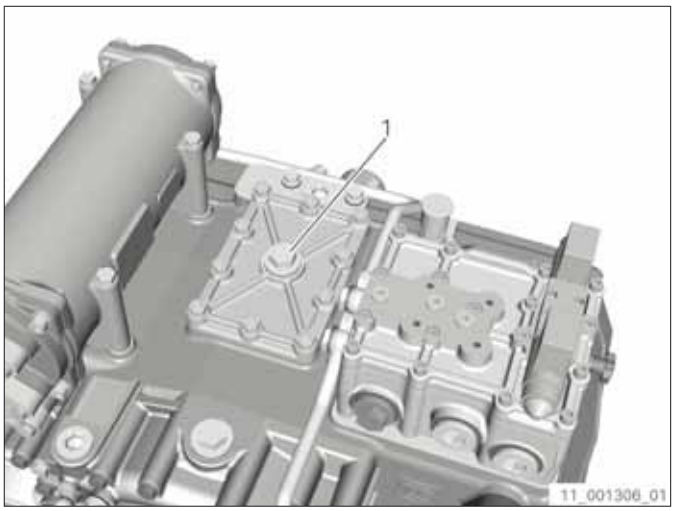

Fig. 122

Fill transmission with new oil.
- 28 dm³ for transmission types ZF 3000 A, ZF 3050 A, ZF 3055 A, ZF 3060 A, ZF 3000 NRA, ZF 3050 NRA, ZF 3055 NRA, ZF 3060 NRA
- 31 dm³ for transmission types ZF 3000, ZF 3050, ZF 3055, ZF 3060, ZF 3070,

ZF 3000 NR, ZF 3050 NR, ZF 3055 NR, ZF 3060 NR, ZF 3070 NR, ZF 3070 A, ZF 3150 A, ZF 3160 A, ZF 3170 A, ZF 3070 NRA, ZF 3150 NRA, ZF 3160 NRA, ZF 3170 NRA, ZF 3000 V, ZF 3050 V, ZF 3000 NRV, ZF 3050 NRV, ZF 3055 V, ZF 3055 NRV, ZF 3060 V, ZF 3070 V, ZF 3060 NRV, ZF 3070 NRV, ZF 3050 D, ZF 3055 D, ZF 3060 D

- 31 dm^3 for transmission types ZF 3000 NC, ZF 3050 NC, ZF 3055 NC, ZF 3060 NC with counter-rotation direction
- 36 dm^3 for transmission types ZF 3310, ZF 3350, ZF 3355, ZF 3360, ZF 3370, ZF 3310 NR, ZF 3350 NRZF 3355 NR, ZF 3360 NR, ZF 3370 NR,
- 36 dm^3 for transmission types ZF 3310 NC, ZF 3350 NC, ZF 3355 NC, ZF 3360 NC with enginewise rotation direction
- 38 dm^3 for transmission types ZF 3311, ZF 3351, ZF 3356, ZF 3361, ZF W3310, ZF W3350, ZF W3355, ZF 3311 NR, ZF 3351 NR, ZF 3356 NR, ZF 3361 NR, ZF W3310 NR, ZF W3350 NR, ZF W3355 NR, ZF 3711, ZF 3751, ZF 3756, ZF 3761, ZF W3710, ZF W3750, ZF 3711 NR, ZF 3751 NR, ZF 3756 NR, ZF 3761 NR, ZF W3710 NR, ZF W3750 NR
- 38 dm^3 for transmission types ZF 3311 NC, ZF 3351 NC, ZF 3356 NC, ZF 3361 NC, ZF W3310 NC, ZF W3350 NC, ZF W3355 NC with counter-rotation direction
- 41 dm^3 for transmission types ZF W3755, ZF W3755 NR
- 38 dm^3 for transmission types ZF 3311, ZF 3351, ZF 3356, ZF 3361, ZF W3310, ZF W3350, ZF W3355, ZF 3311 NR, ZF 3351 NR, ZF 3356 NR, ZF 3361 NR, ZF W3310 NR, ZF W3350 NR, ZF W3355 NR with power take-in
- 38 dm^3 for transmission types ZF 3311, ZF 3351, ZF 3356, ZF 3361, ZF W3310, ZF W3350, ZF W3355, ZF 3311 NR, ZF 3351 NR, ZF 3356 NR, ZF 3361 NR,

ZF W3310 NR, ZF W3350 NR,
ZF W3355 NR with shaft brake

The oil quantity is specified on the type plate *(refer to section Transmission designation, page 184)*.

3. Fit and screw in filler plug (1) with old sealing ring.

4. Unlock engine starting mechanism.

5. Start engine and, for lubrication purposes, allow the transmission to run in neutral shift position for at least 5 min. at an increased engine idle speed of max. 50% of the operating nominal speed.

6. Switch off engine and block engine starting mechanism.

   After switching off the engine, wait at least 10 min. until the oil level has settled in the transmission.

Checking oil level and topping up oil

7. Screw out filler plug (1).

8. Check oil level *(refer to section Checking the oil level, page 308)*.

9. Use filtered oil.

NOTICE

The use of a non-approved lubricant can lead to property damage.

⇨ Only use lubricant from the currently valid ZF List of Lubricants.

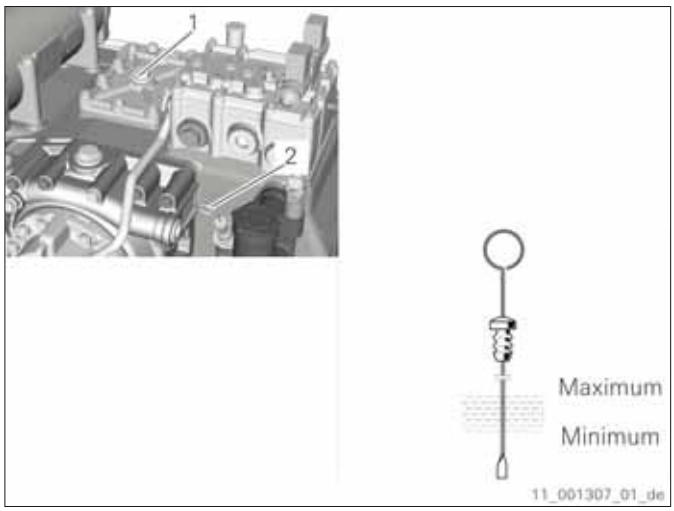

Fig. 123

Top up new oil.

The oil quantity remaining in the units must be topped up.

10. Check oil level *(refer to section Checking the oil level, page 308)*.

    The measurement with the oil dipstick (2) is decisive.

11. Insert and screw in filler plug (1) with a new sealing ring.

12. Tighten filler plug (1).
    Tightening torque: 115 Nm

5.2 Commissioning after an extended downtime

Before the transmission is commissioned again following an extended downtime, perform required measures *(refer to section Corrosion protection and preservation, page 296)*.

6 Operation

6.1 Operating elements

The electric transmission actuation is part of the standard scope of supply.

Design the actuation systems in such a manner that a gear change can only be performed on the transmission when the engine is in idling mode. The gear change on the transmission is most reliably achieved via a single lever control whereby the engine-speed advance and the transmission actuation are coupled with each other. In the event of a double lever operation, install an interlock into the transmission actuation. Consequently, a transmission control is only permitted if the drive lever is in the idling position.

With the single lever control, there must be an option to switch the transmission actuation off. This switch off option enables a high engine speed for inspection purposes or for the warm-up process without the activated transmission.

With the electric transmission actuation, the control valve is axially moved in the control unit by means of an oil pressure via an electric actuation unit installed on the control unit.

With the mechanical transmission actuation, the control valve is axially moved in the control unit by means of an oil pressure via a mechanical actuation unit installed on the control unit.

To ensure that the control can be implemented with the electric transmission actuation, take the mechanical emergency actuation out of operation.

Prior to commencing travel, ensure that the mechanical emergency actuation is not active.

The following variants for the transmission actuation are possible:

Transmission	Number of solenoid valves	Function keep shift position in the event of power failure is available	Section
ZF 3000 family without NR ZF 3300 family without NR ZF 3700 family without NR	2 • Counter-rotation • Enginewise rotation	No	*(refer to section Electric actuation unit ZF 3000, ZF 3300, ZF 3700 family without NR, page 197)*
ZF 3000 NR (counter-rotation) family ZF 3300 NR (counter-rotation) family ZF 3700 NR (counter-rotation) family	2 • Counter-rotation • Neutral	Yes	*(refer to section Electric actuation unit ZF 3000 NR, ZF 3300 NR, ZF 3700 NR (counter-rotation) family, page 205)*
ZF 3000 NR (enginewise rotation) family ZF 3300 NR (enginewise rotation) family ZF 3700 NR (enginewise rotation) family	2 • Enginewise rotation • Neutral	Yes	*(refer to section Electric actuation unit ZF 3000 NR, ZF 3300 NR, ZF 3700 NR (enginewise rotation) family, page 210)*

Tab. 25 Variants of the electric transmission actuation without power take-in

Transmission	Number of solenoid valves	Function keep shift position in the event of power failure is available	Section
ZF 3000 family ZF 3300 family ZF 3700 family	---	---	*(refer to section Mechanical actuation unit, page 215)*

Tab. 26 Mechanical transmission actuation

6.1.1 Electric actuation unit ZF 3000, ZF 3300, ZF 3700 family without NR

6.1.1.1 Elements of the electric actuation unit

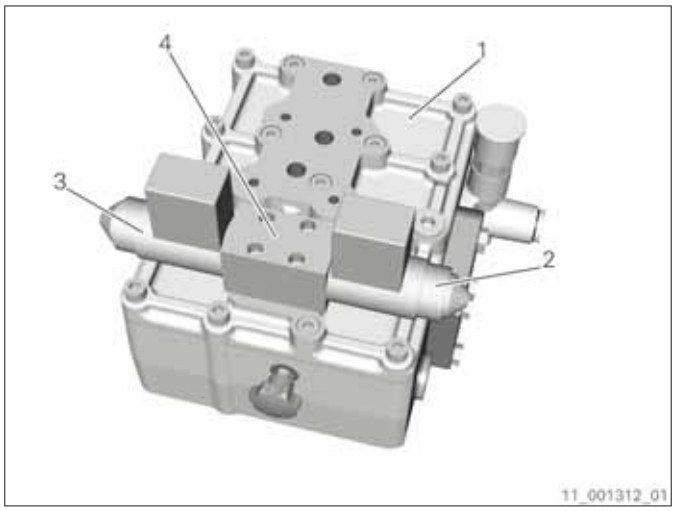

Fig. 124

1 Control unit
2 Solenoid valve (b) for the counter-rotation shift position
3 Solenoid valve (a) for the enginewise rotation shift position
4 Pilot valve for the counter-rotation and enginewise rotation shift positions

The solenoid valve (3) facing the output is responsible for an output rotation direction that is the same as the direction of drive rotation.

The solenoid valve (2) opposite of the output is responsible for an output rotation direction that is opposite to the direction of drive rotation.

With the DL family, the solenoid valve (3) is opposite of the output and the solenoid valve (2) is facing the output.

⚠ DANGER

Risk of injury due to rotating parts.
Death or serious injury probable.
⇨ Install propshaft brake or propshaft lock.

The transmission clutch is open in the neutral shift position. The propshaft, however, continues to turn. If a standing propshaft is necessary, provide a propshaft brake or another type of propshaft lock.

⚠ WARNING

Risk of accident due to a non-functioning control element.
Death or serious injury possible.
⇨ Adapt driving method when on open waters.
⇨ Do not drive in tight and heavily-frequented waters.
⇨ Allow the ship to be towed.

In the event of power failure, the transmission switches into the neutral shift position. This may result in the ship being unmaneuverable.

6.1.1.2 Mechanical emergency actuation

In the event of malfunctions in the actuation unit, the transmission can be mechanically actuated by hand with the aid of a headless screw. In doing so, the control piston is axially moved.

⚠ WARNING

Risk of accident due to insufficient access to the emergency actuation tool.
Death or serious injury possible.
⇨ Ensure free access.

⚠ WARNING

Risk of accident due to insufficient clearance around the mechanical emergency actuation.
Death or serious injury possible.
⇨ Ensure clearance of at least 20 cm.

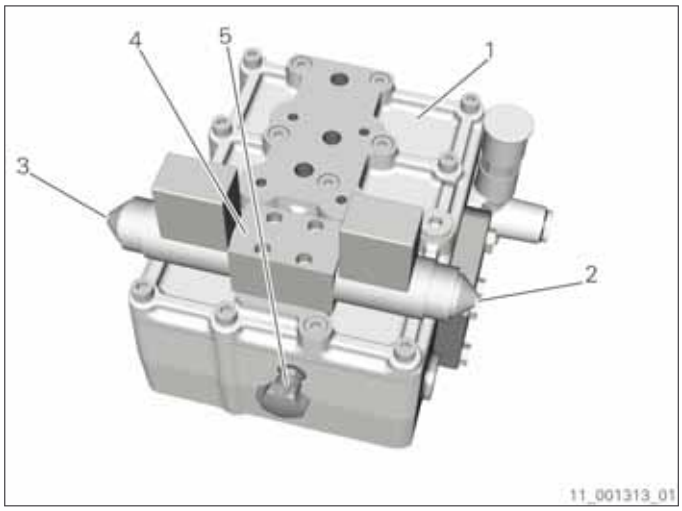

Fig. 125

1 Control unit
2 Headless screw of solenoid valve (b)
3 Headless screw of solenoid valve (a)
4 Pilot valve for the counter-rotation and enginewise rotation shift positions
5 Hexagon socket wrench for the mechanical emergency actuation

The mechanical emergency actuation of the solenoid valves (2, 3) is manually activated using a headless screw. The headless screw is positioned on the solenoid valve's front. A hexagon socket wrench (5) with a width across flats of 3 mm, which can be used to actuate the headless screw, is attached to the control unit.

There are two positions for the headless screw that are noticeable upon reaching a stop. An intermediate position is not permissible.

The two positions are defined as follows

- The headless screw has been unscrewed and protrudes approx. 0.2-0.3 mm from the plane surface.

- The headless screw has been screwed in to approx. 6.0-6.2 mm below the plane surface.

6.1.1.2.1 Neutral shift position

The headless screw (3) of the solenoid valve (a) has been unscrewed and protrudes approx. 0.2-0.3 mm from the plane surface.

The headless screw (2) of the solenoid valve (b) has been unscrewed and protrudes approx. 0.2-0.3 mm from the plane surface.

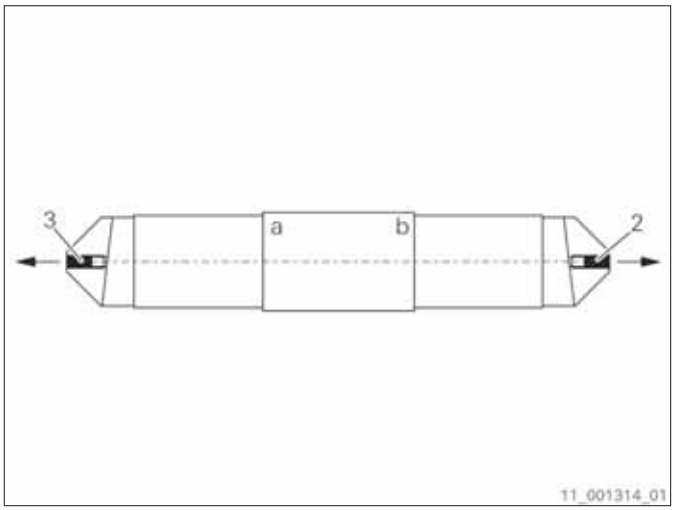

Fig. 126

6.1.1.2.2 Counter-rotation shift position

The headless screw (3) of the solenoid valve (a) has been unscrewed and protrudes approx. 0.2-0.3 mm from the plane surface.

The headless screw (2) of the solenoid valve (b) has been screwed in to a distance A of approx. 6.0-6.2 mm below the plane surface.

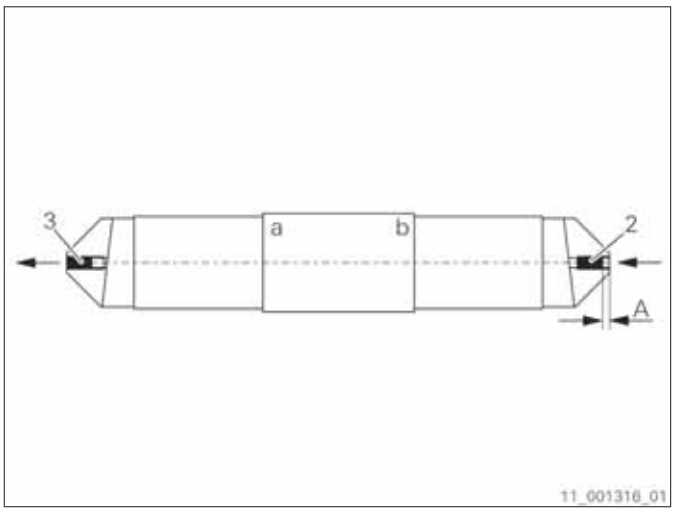

Fig. 127

6.1.1.2.3 Enginewise rotation shift position

The headless screw (3) of the solenoid valve (a) has been screwed in to a distance A of approx. 6.0-6.2 mm below the plane surface.

The headless screw (2) of the solenoid valve (b) has been unscrewed and protrudes approx. 0.2-0.3 mm from the plane surface.

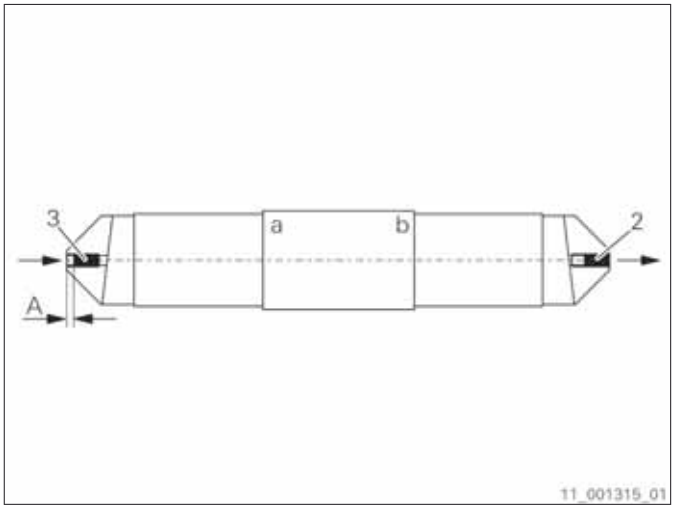

Fig. 128

6.1.1.3 Operation with mechanical emergency actuation

⚠ WARNING

Risk of accident due to a non-functioning control element.
Death or serious injury possible.

⇨ Adapt driving method when on open waters.
⇨ Do not drive in tight and heavily-frequented waters.
⇨ Allow the ship to be towed.

The clutch set by the mechanical emergency actuation is always closed while the engine is running. The transmission that is mechanically actuated as an emergency cannot be shifted into the neutral shift position or, in the event of reverse transmissions, reversed using the drive lever.

6.1.1.3.1 Switching on the mechanical emergency actuation

ⓘ Prior to commencing travel, ensure that the emergency actuation tool is available on the control unit.

⚠ CAUTION

Risk of burn injuries due to contact with hot surfaces.
Slight or moderate injury possible.

⇨ Wear protective gloves.

1. Switch off the electric transmission actuation:
   - Switch off the transmission actuation.
   - Remove the plugs from the solenoid valves.

2. Set the engine speed adjustment to idling speed.

3. **⚠ WARNING**

   Risk of accident due to incorrect direction of motion.
   Death or serious injury possible.
   ⇨ Ensure correct direction of motion.

   Screw in headless screw (2) or (3) of the solenoid valve that corresponds to the desired shift position to approx. 6.0-6.2 mm as far as it will go using the emergency actuation tool.

4. Check correct direction of motion.

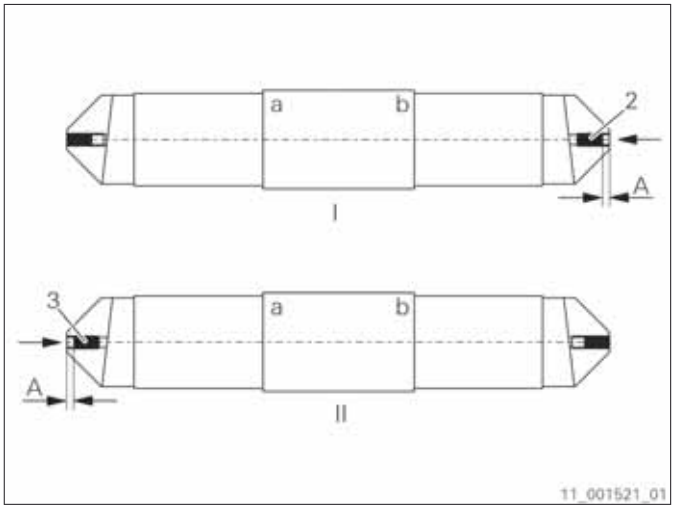

Fig. 129

I Counter-rotation shift position
II Enginewise rotation shift position

5. Screw the emergency actuation tool back into the corresponding receiver on the control unit.

6.1.1.3.2 Switching from counter-rotation shift position to enginewise rotation shift position

This switchover process is only possible on reverse transmissions.

⚠ CAUTION

Risk of burn injuries due to contact with hot surfaces.
Slight or moderate injury possible.
⇨ Wear protective gloves.

1. Set the engine speed adjustment to idling speed and wait until the ship speed has dropped to such an extent that the engine is not switched off during the switchover process.

2. Unscrew the headless screws (2, 3) of both solenoid valves (a) and (b) as far as they will go using the emergency actuation tool.

   → The headless screws (2, 3) have been unscrewed and protrude approx. 0.2-0.3 mm from the plane surface.

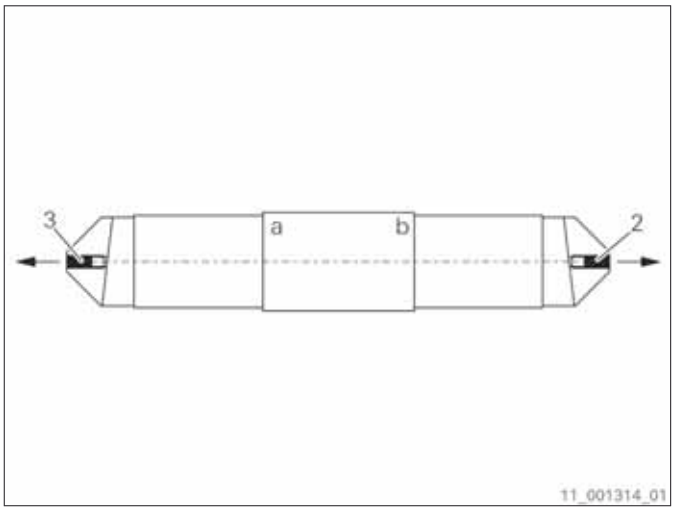

Fig. 130

3. Screw in the headless screw (3) of the solenoid valve (a) to approx. 6.0-6.2 mm as far as it will go using the emergency actuation tool.

4. Check correct direction of motion.

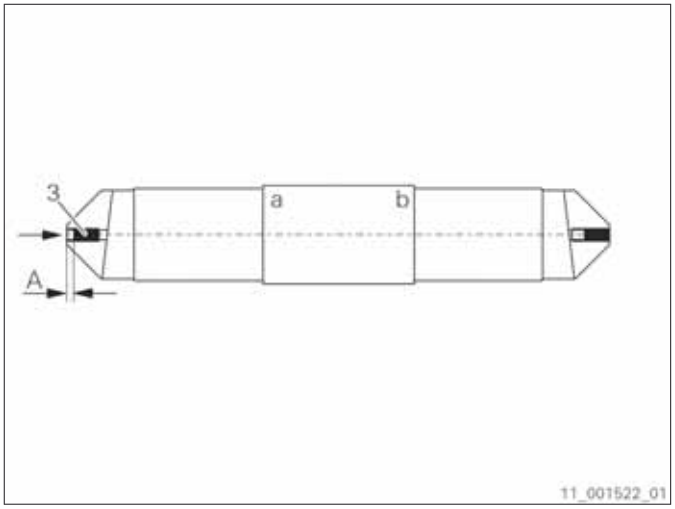

Fig. 131

5. Screw the emergency actuation tool back into the corresponding receiver on the control unit.

6.1.1.3.3 Switching from enginewise rotation shift position to counter-rotation shift position

This switchover process is only possible on reverse transmissions.

⚠ CAUTION

Risk of burn injuries due to contact with hot surfaces.
Slight or moderate injury possible.
⇨ Wear protective gloves.

1. Set the engine speed adjustment to idling speed and wait until the ship speed has dropped to such an extent that the engine is not switched off during the switchover process.

2. Unscrew the headless screws (2, 3) of both solenoid valves (a) and (b) as far as they will go using the emergency actuation tool.

   → The headless screws (2, 3) have been unscrewed and protrude approx. 0.2-0.3 mm from the plane surface.

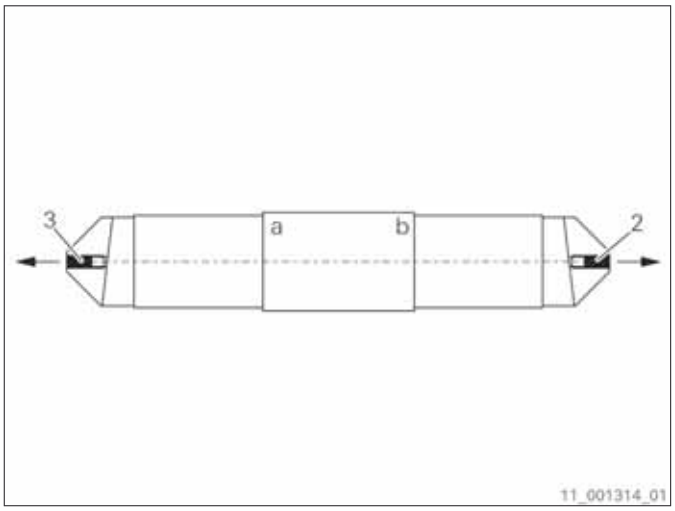

Fig. 132

3. Screw in the headless screw (2) of the solenoid valve (b) to approx. 6.0-6.2 mm as far as it will go using the emergency actuation tool.

4. Check correct direction of motion.

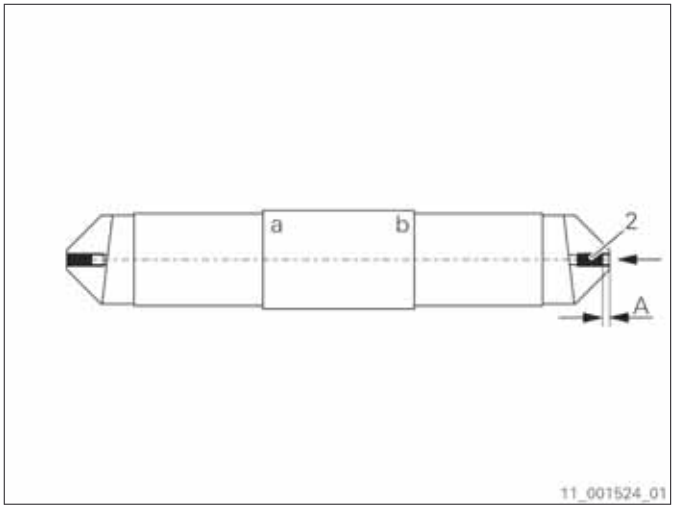

Fig. 133

5. Screw the emergency actuation tool back into the corresponding receiver on the control unit.

6.1.1.3.4 Switching off the mechanical emergency actuation

⚠ CAUTION

Risk of burn injuries due to contact with hot surfaces.
Slight or moderate injury possible.
⇨ Wear protective gloves.

1. Set the engine speed adjustment to idling speed.

2. Unscrew the headless screws (2, 3) of both solenoid valves (a) and (b) as far as they will go using the emergency actuation tool.

   → The headless screws (2, 3) have been unscrewed and protrude approx. 0.2-0.3 mm from the plane surface.

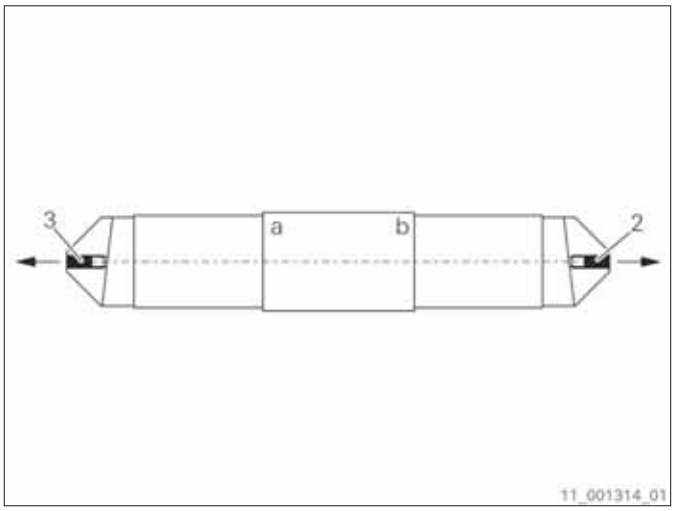

Fig. 134

3. Screw the emergency actuation tool back into the corresponding receiver on the control unit.

4. Move the drive lever into the neutral shift position.

5. Switch on the electric transmission actuation:
   - Switch on the transmission actuation.
   - Connect the solenoid valve plugs.

6. Check the actuation of all shift positions on the drive lever.

6.1.2 Electric actuation unit ZF 3000 NR, ZF 3300 NR, ZF 3700 NR (counter-rotation) family

6.1.2.1 Elements of the electric actuation unit

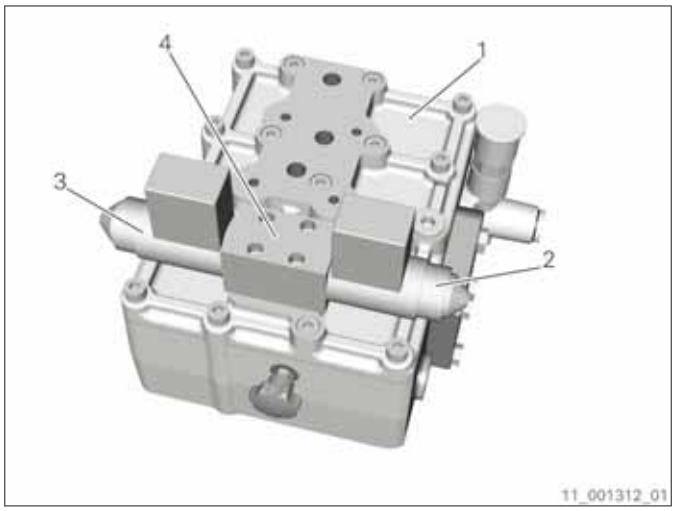

Fig. 135

1 Control unit
2 Solenoid valve (b) for the counter-rotation shift position
3 Solenoid valve (a) for the neutral shift position
4 Pilot valve for the counter-rotation and neutral shift positions

The solenoid valve (3) facing the output is responsible for the neutral shift position.

The solenoid valve (2) opposite of the output is responsible for an output rotation direction that is opposite to the direction of drive rotation.

⚠ DANGER

Risk of injury due to rotating parts.
Death or serious injury probable.
⇨ Install propshaft brake or propshaft lock.

The transmission clutch is open in the neutral shift position. The propshaft, however, continues to turn. If a standing propshaft is necessary, provide a propshaft brake or another type of propshaft lock.

⚠ WARNING

Risk of accident due to a non-functioning control element.
Death or serious injury possible.
⇨ Adapt driving method when on open waters.
⇨ Do not drive in tight and heavily-frequented waters.
⇨ Allow the ship to be towed.

In case of power failure, the current shift position remains in place.

6.1.2.2 Mechanical emergency actuation

In the event of malfunctions in the actuation unit, the transmission can be mechanically actuated by hand with the aid of a headless screw. In doing so, the control piston is axially moved.

⚠ WARNING

Risk of accident due to insufficient access to the emergency actuation tool.
Death or serious injury possible.
⇨ Ensure free access.

⚠ WARNING

Risk of accident due to insufficient clearance around the mechanical emergency actuation.
Death or serious injury possible.
⇨ Ensure clearance of at least 20 cm.

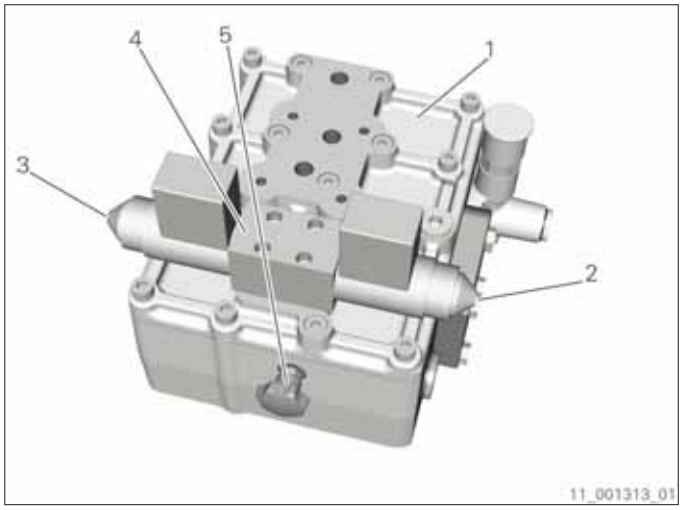

Fig. 136

1 Control unit
2 Headless screw of solenoid valve (b)
3 Headless screw of solenoid valve (a)
4 Pilot valve for the counter-rotation and neutral shift positions
5 Hexagon socket wrench for the mechanical emergency actuation

The mechanical emergency actuation of the solenoid valves (2, 3) is manually activated using a headless screw. The headless screw is positioned on the solenoid valve's front. A hexagon socket wrench (5) with a width across flats of 3 mm, which can be used to actuate the headless screw, is attached to the control unit.

There are two positions for the headless screw that are noticeable upon reaching a stop. An intermediate position is not permissible.

The two positions are defined as follows

- The headless screw has been unscrewed and protrudes approx. 0.2-0.3 mm from the plane surface.
- The headless screw has been screwed in to approx. 6.0-6.2 mm below the plane surface.

6.1.2.2.1 Neutral shift position

The headless screw (3) of the solenoid valve (a) has been screwed in to a distance A of approx. 6.0-6.2 mm below the plane surface.

The headless screw (2) of the solenoid valve (b) has been unscrewed and protrudes approx. 0.2-0.3 mm from the plane surface.

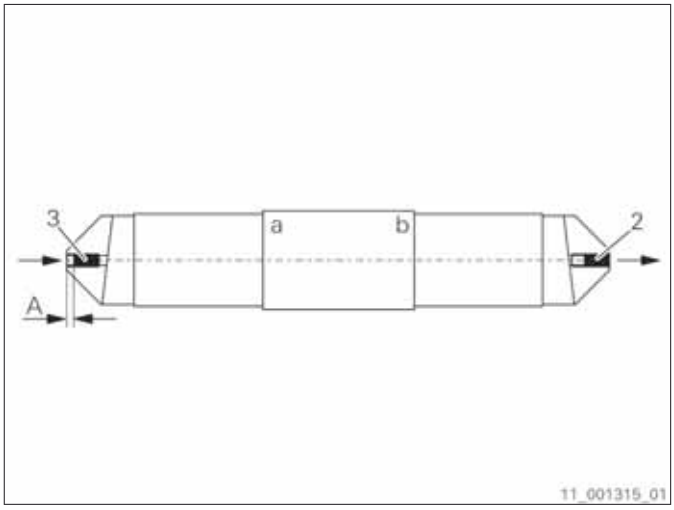

Fig. 137

6.1.2.2.2 Counter-rotation shift position

The headless screw (3) of the solenoid valve (a) has been unscrewed and protrudes approx. 0.2-0.3 mm from the plane surface.

The headless screw (2) of the solenoid valve (b) has been screwed in to a distance A of approx. 6.0-6.2 mm below the plane surface.

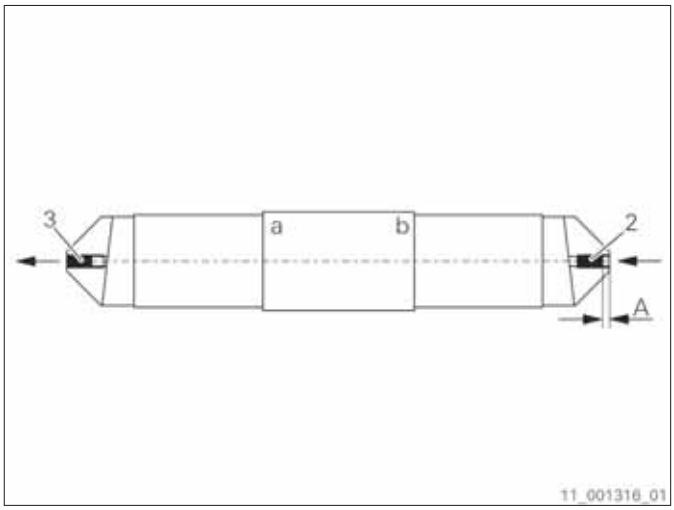

Fig. 138

6.1.2.3 Operation with mechanical emergency actuation

⚠ WARNING

Risk of accident due to a non-functioning control element.
Death or serious injury possible.

- ⇨ Adapt driving method when on open waters.
- ⇨ Do not drive in tight and heavily-frequented waters.
- ⇨ Allow the ship to be towed.

The clutch set by the mechanical emergency actuation is always closed while the engine is running. The transmission that is mechanically actuated as an emergency cannot be shifted into the neutral shift position or, in the event of reverse transmissions, reversed using the drive lever.

6.1.2.3.1 Switching on the mechanical emergency actuation

Prior to commencing travel, ensure that the emergency actuation tool is available on the control unit.

⚠ CAUTION

Risk of burn injuries due to contact with hot surfaces.
Slight or moderate injury possible.
⇨ Wear protective gloves.

1. Switch off the electric transmission actuation:
   - Switch off the transmission actuation.
   - Remove the plugs from the solenoid valves.

2. Set the engine speed adjustment to idling speed.

3. **⚠ WARNING**

   Risk of accident due to incorrect direction of motion.
   Death or serious injury possible.
   ⇨ Ensure correct direction of motion.

   Screw in the headless screw (2) of the solenoid valve (b) to approx. 6.0-6.2 mm as far as it will go using the emergency actuation tool.

4. Check correct direction of motion.

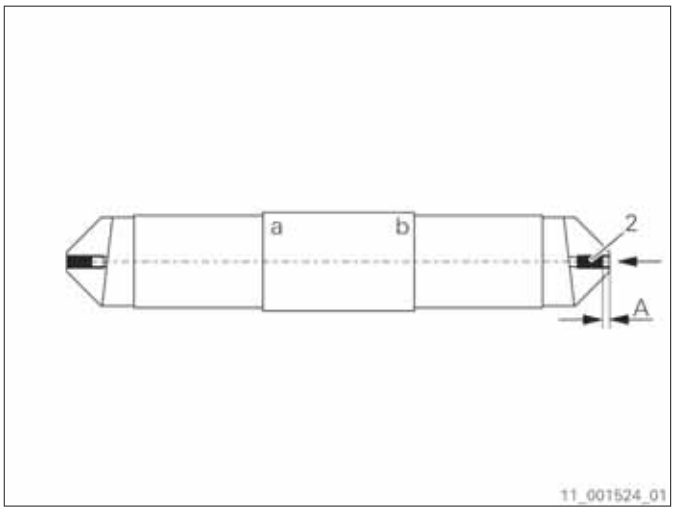

Fig. 139

5. Screw the emergency actuation tool back into the corresponding receiver on the control unit.

6.1.2.3.2 Switching off the mechanical emergency actuation

⚠ CAUTION

Risk of burn injuries due to contact with hot surfaces.
Slight or moderate injury possible.
⇨ Wear protective gloves.

1. Set the engine speed adjustment to idling speed.

2. Unscrew the headless screws (2, 3) of both solenoid valves (a) and (b) as far as they will go using the emergency actuation tool.

   → The headless screws (2, 3) have been unscrewed and protrude approx. 0.2-0.3 mm from the plane surface.

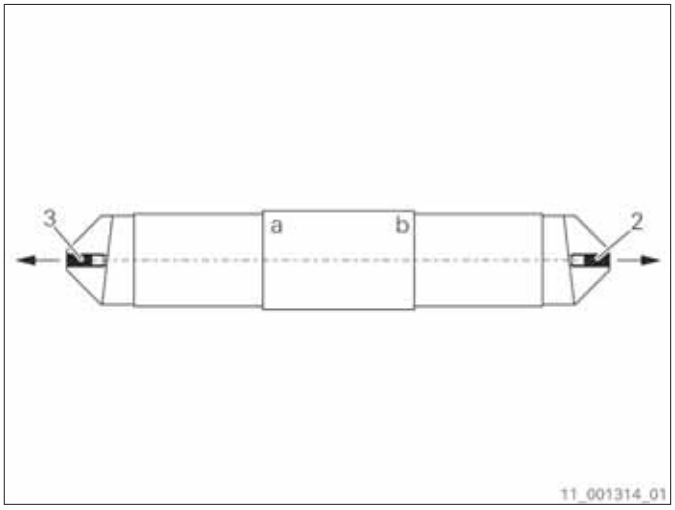

Fig. 140

3. Screw the emergency actuation tool back into the corresponding receiver on the control unit.

4. Move the drive lever into the neutral shift position.

5. Switch on the electric transmission actuation:
   - Switch on the transmission actuation.
   - Connect the solenoid valve plugs.

6. Check the actuation of all shift positions on the drive lever.

6.1.3 Electric actuation unit ZF 3000 NR, ZF 3300 NR, ZF 3700 NR (enginewise rotation) family

6.1.3.1 Elements of the electric actuation unit

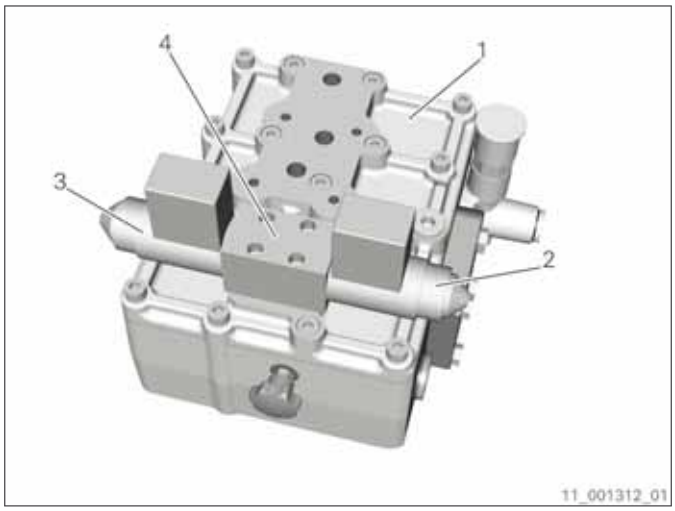

Fig. 141

1 Control unit
2 Solenoid valve (b) for the neutral shift position
3 Solenoid valve (a) for the enginewise rotation shift position
4 Pilot valve for the enginewise rotation and neutral shift positions

The solenoid valve (3) facing the output is responsible for an output rotation direction that is the same as the direction of drive rotation.

The solenoid valve (2) opposite of the output is responsible for the neutral shift position.

⚠ DANGER

Risk of injury due to rotating parts.
Death or serious injury probable.
⇨ Install propshaft brake or propshaft lock.

The transmission clutch is open in the neutral shift position. The propshaft, however, continues to turn. If a standing propshaft is necessary, provide a propshaft brake or another type of propshaft lock.

⚠ WARNING

Risk of accident due to a non-functioning control element.
Death or serious injury possible.
⇨ Adapt driving method when on open waters.
⇨ Do not drive in tight and heavily-frequented waters.
⇨ Allow the ship to be towed.

In case of power failure, the current shift position remains in place.

6.1.3.2 Mechanical emergency actuation

In the event of malfunctions in the actuation unit, the transmission can be mechanically actuated by hand with the aid of a headless screw. In doing so, the control piston is axially moved.

⚠ WARNING

Risk of accident due to insufficient access to the emergency actuation tool.
Death or serious injury possible.
⇨ Ensure free access.

⚠ WARNING

Risk of accident due to insufficient clearance around the mechanical emergency actuation.
Death or serious injury possible.
⇨ Ensure clearance of at least 20 cm.

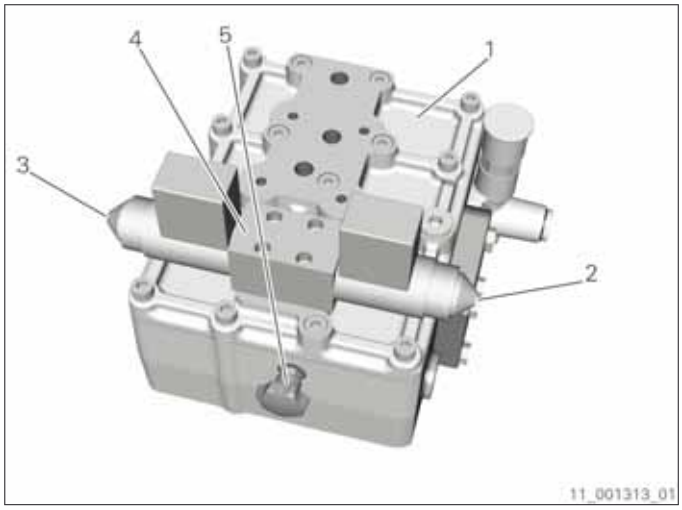

Fig. 142

1 Control unit
2 Headless screw of solenoid valve (b)
3 Headless screw of solenoid valve (a)
4 Pilot valve for the enginewise rotation and neutral shift positions
5 Hexagon socket wrench for the mechanical emergency actuation

The mechanical emergency actuation of the solenoid valves (2, 3) is manually activated using a headless screw. The headless screw is positioned on the solenoid valve's front. A hexagon socket wrench (5) with a width across flats of 3 mm, which can be used to actuate the headless screw, is attached to the control unit.

There are two positions for the headless screw that are noticeable upon reaching a stop. An intermediate position is not permissible.

The two positions are defined as follows

- The headless screw has been unscrewed and protrudes approx. 0.2-0.3 mm from the plane surface.
- The headless screw has been screwed in to approx. 6.0-6.2 mm below the plane surface.

6.1.3.2.1 Neutral shift position

The headless screw (3) of the solenoid valve (a) has been unscrewed and protrudes approx. 0.2-0.3 mm from the plane surface.

The headless screw (2) of the solenoid valve (b) has been screwed in to a distance A of approx. 6.0-6.2 mm below the plane surface.

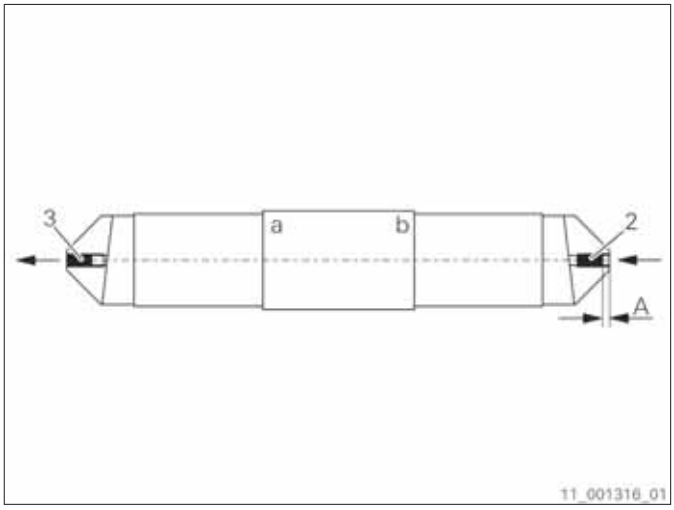

Fig. 143

6.1.3.2.2 Enginewise rotation shift position

The headless screw (3) of the solenoid valve (a) has been screwed in to a distance A of approx. 6.0-6.2 mm below the plane surface.

The headless screw (2) of the solenoid valve (b) has been unscrewed and protrudes approx. 0.2-0.3 mm from the plane surface.

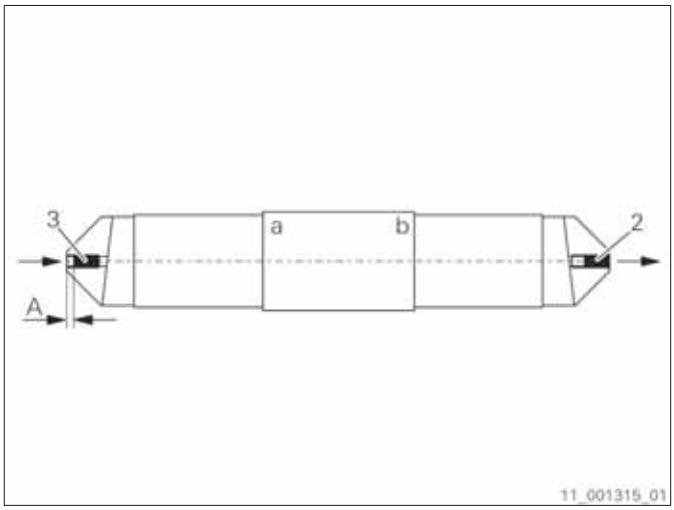

Fig. 144

6.1.3.3 Operation with mechanical emergency actuation

⚠ WARNING

Risk of accident due to a non-functioning control element.
Death or serious injury possible.

- ⇨ Adapt driving method when on open waters.
- ⇨ Do not drive in tight and heavily-frequented waters.
- ⇨ Allow the ship to be towed.

The clutch set by the mechanical emergency actuation is always closed while the engine is running. The transmission that is mechanically actuated as an emergency cannot be shifted into the neutral shift position or, in the event of reverse transmissions, reversed using the drive lever.

6.1.3.3.1 Switching on the mechanical emergency actuation

Prior to commencing travel, ensure that the emergency actuation tool is available on the control unit.

⚠ CAUTION

Risk of burn injuries due to contact with hot surfaces.
Slight or moderate injury possible.
⇨ Wear protective gloves.

1. Switch off the electric transmission actuation:
   - Switch off the transmission actuation.
   - Remove the plugs from the solenoid valves.

2. Set the engine speed adjustment to idling speed.

3. **⚠ WARNING**

   Risk of accident due to incorrect direction of motion.
   Death or serious injury possible.
   ⇨ Ensure correct direction of motion.

   Screw in the headless screw (3) of the solenoid valve (a) to approx. 6.0-6.2 mm as far as it will go using the emergency actuation tool.

4. Check correct direction of motion.

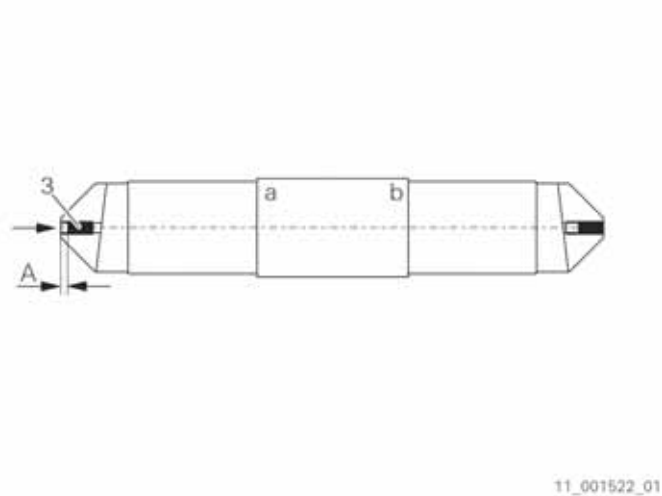

Fig. 145

5. Screw the emergency actuation tool back into the corresponding receiver on the control unit.

6.1.3.3.2 Switching off the mechanical emergency actuation

⚠ CAUTION

Risk of burn injuries due to contact with hot surfaces.
Slight or moderate injury possible.
⇨ Wear protective gloves.

1. Set the engine speed adjustment to idling speed.

2. Unscrew the headless screws (2, 3) of both solenoid valves (a) and (b) as far as they will go using the emergency actuation tool.

   → The headless screws (2, 3) have been unscrewed and protrude approx. 0.2-0.3 mm from the plane surface.

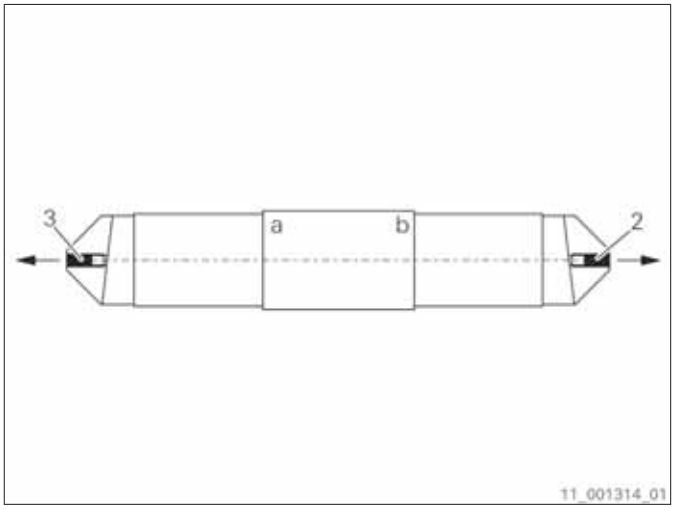

Fig. 146

3. Screw the emergency actuation tool back into the corresponding receiver on the control unit.

4. Move the drive lever into the neutral shift position.

5. Switch on the electric transmission actuation:
   - Switch on the transmission actuation.
   - Connect the solenoid valve plugs.

6. Check the actuation of all shift positions on the drive lever.

6.1.4 Mechanical actuation unit

6.1.4.1 Elements of the mechanical actuation unit

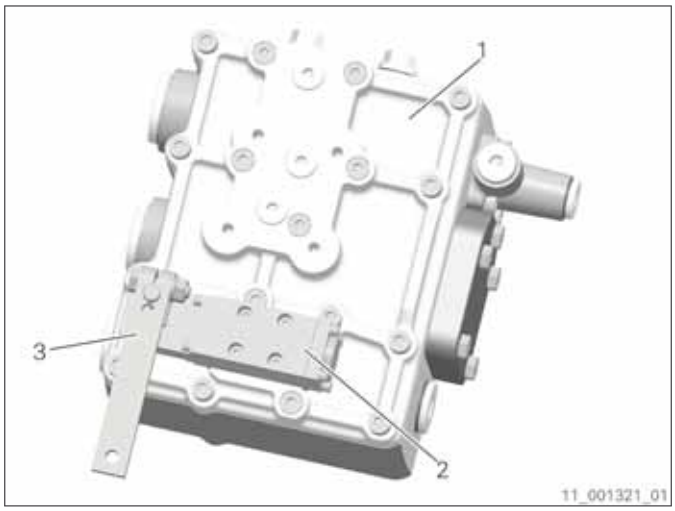

Fig. 147

1 Control unit
2 Pilot valve for the counter-rotation, enginewise rotation and neutral shift positions
3 Shift lever

The pilot valve is actuated via the shift lever (3). The desired shift position is selected by turning the shift lever (3). The shift lever (3) is actuated using a pull-push cable. The shift lever (3) can be turned on both sides of its rotation axis by 20° respectively.

The customer must limit the rotation range of the shift lever (3) by introducing stops.

Depending on the shift lever's position, three shift positions are possible. Every shift position has its internal detent mechanism.

In the neutral shift position, the shift lever (3) is locked in center position.

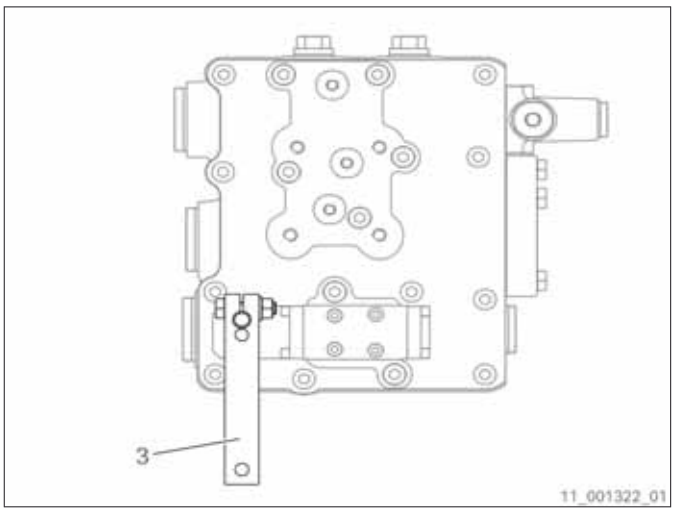

Fig. 148

In the enginewise rotation shift position, the shift lever (3) has been turned counterclockwise by approx. 20°.

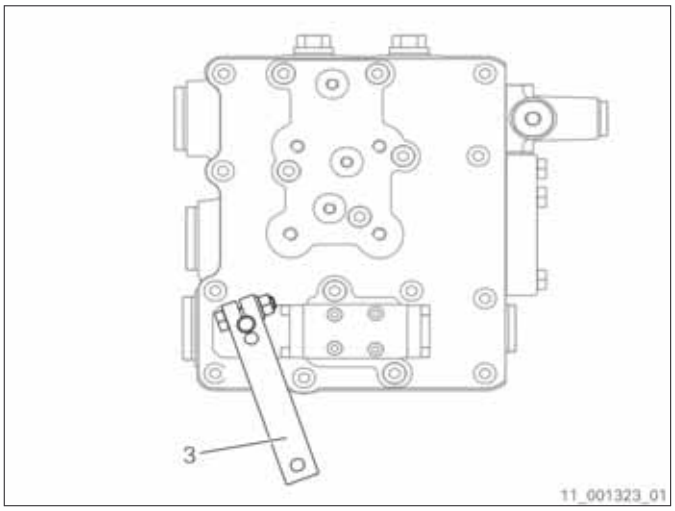

Fig. 149

In the counter-rotation shift position, the shift lever (3) has been turned clockwise by approx. 20°.

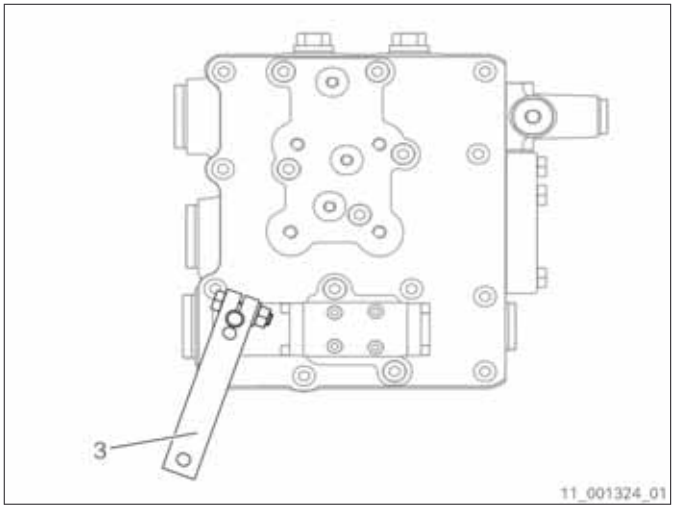

Fig. 150

⚠ DANGER

Risk of injury due to rotating parts.
Death or serious injury probable.
⇨ Install propshaft brake or propshaft lock.

The transmission clutch is open in the neutral shift position. The propshaft, however, continues to turn. If a standing propshaft is necessary, provide a propshaft brake or another type of propshaft lock.

At a distance of 100 mm from the shift lever's rotation axis, the actuating force amounts to approx. 25 N. Check the shift travel achieved on the transmission at regular intervals and after carrying out any repair or overhaul work. Reset the shift travel if necessary.

ⓘ If the distance between the control unit and the shift lever is too large, it is very difficult to comply with the stipulated shift position by mechanical means. ZF Friedrichshafen AG recommends using an electric transmission actuation in such cases.

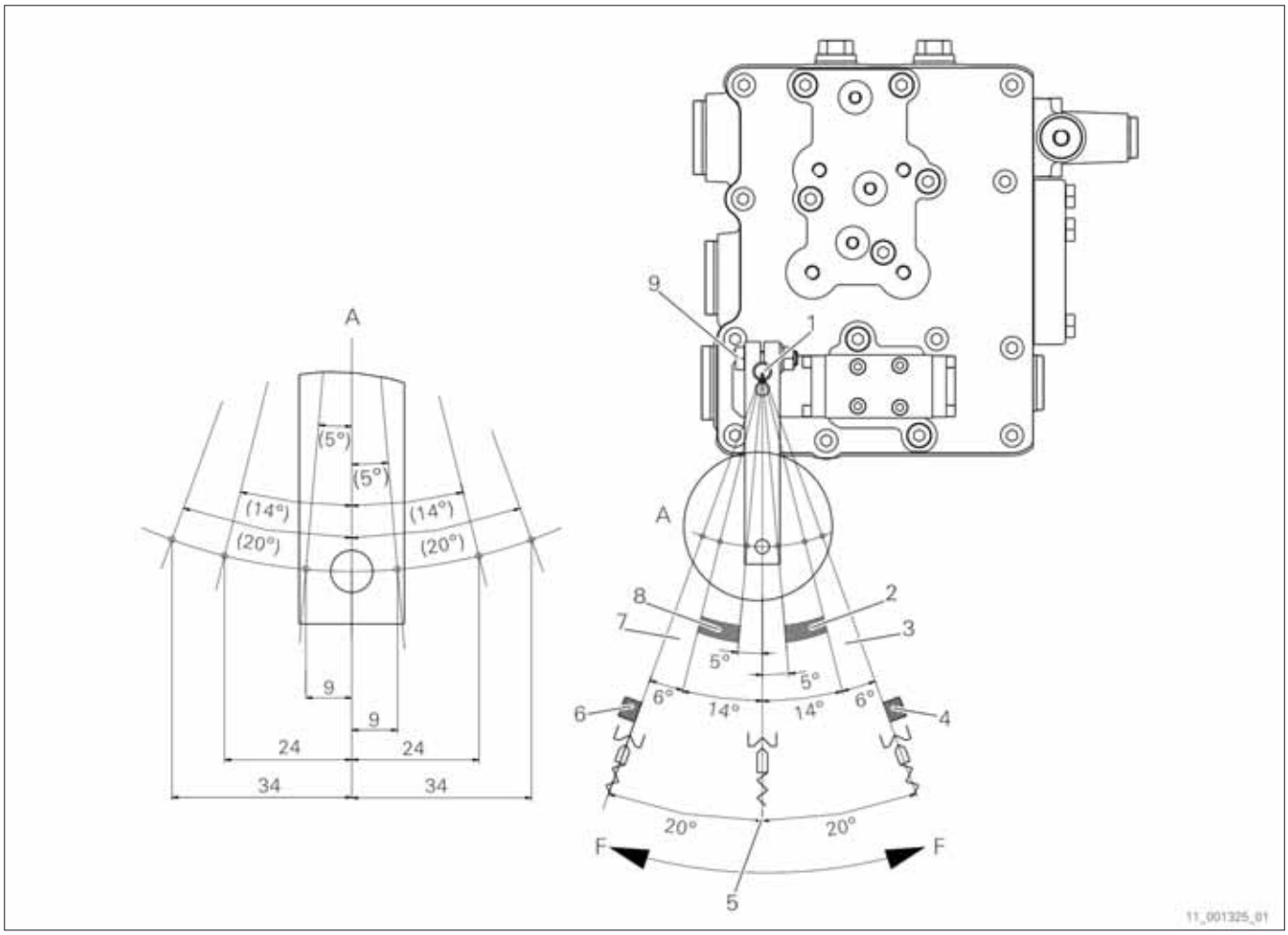

Fig. 151

A Shift travel and shift angles of shift lever
1 Rotation axis of shift lever
3 Detent position for the enginewise rotation shift position
5 Detent position for the neutral shift position
7 Detent position for the counter-rotation shift position
9 Setscrew

F Actuating force at a distance of 100 mm from the shift lever's rotation axis
F = 25 N, permissible force F_{max} = 75 N
2 Undefined shift position
Pass this range quickly.
4 Shift stop, not part of ZF scope of supply
6 Shift stop, not part of ZF scope of supply
8 Undefined shift position
Pass this range quickly.

6.1.4.2 Mechanical emergency actuation

In the event of malfunctions in the actuation unit, the transmission can be mechanically actuated by hand with the aid of the shift lever after the mechanical transmission actuation has been unhitched. In doing so, the control piston is axially moved.

Depending on the shift lever's position, three shift positions are possible. Every shift position has its internal detent mechanism.

In the neutral shift position, the shift lever (3) is locked in center position.

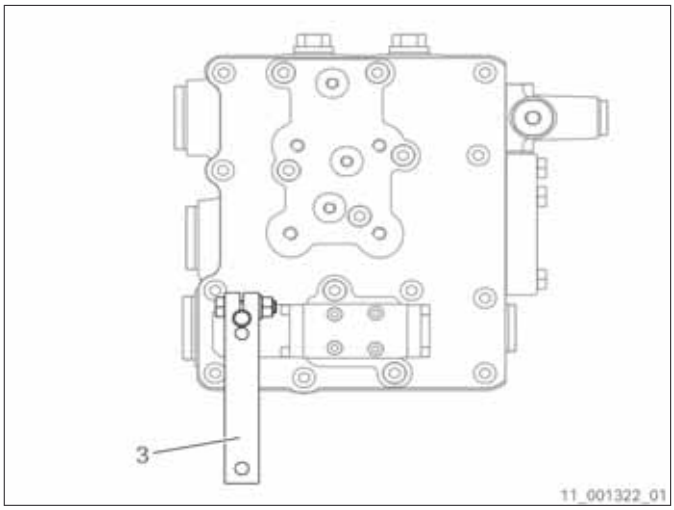

Fig. 152

In the enginewise rotation shift position, the shift lever (3) has been turned counterclockwise by approx. 20°.

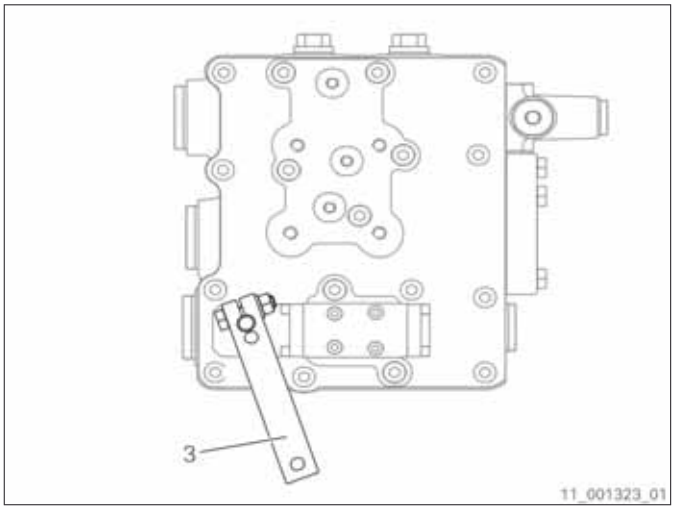

Fig. 153

In the counter-rotation shift position, the shift lever (3) has been turned clockwise by approx. 20°.

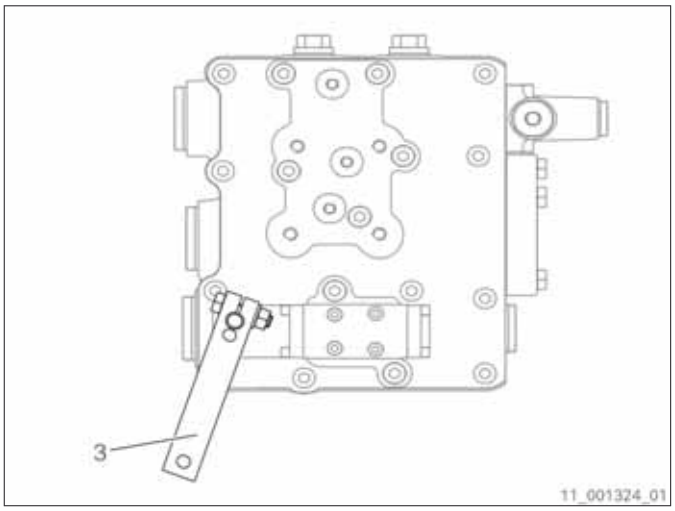

Fig. 154

6.1.4.3 Operation with mechanical emergency actuation

⚠ WARNING

Risk of accident due to a non-functioning control element.
Death or serious injury possible.

⇨ Adapt driving method when on open waters.
⇨ Do not drive in tight and heavily-frequented waters.
⇨ Allow the ship to be towed.

The clutch set by the mechanical emergency actuation is always closed while the engine is running. The transmission that is mechanically actuated as an emergency cannot be shifted into the neutral shift position or, in the event of reverse transmissions, reversed using the drive lever.

6.1.4.3.1 Switching on the mechanical emergency actuation

Requirements:

- The pull-push cable or the linkage of the mechanical remote actuation on the control unit's shift lever have been unhitched.

⚠ CAUTION

Risk of burn injuries due to contact with hot surfaces.
Slight or moderate injury possible.

⇨ Wear protective gloves.

1. Set the engine speed adjustment to idling speed.

2. Move the shift lever (3) by hand into the neutral shift position and lock it into place.

3. Stay in this position for approx. 0.5 s.

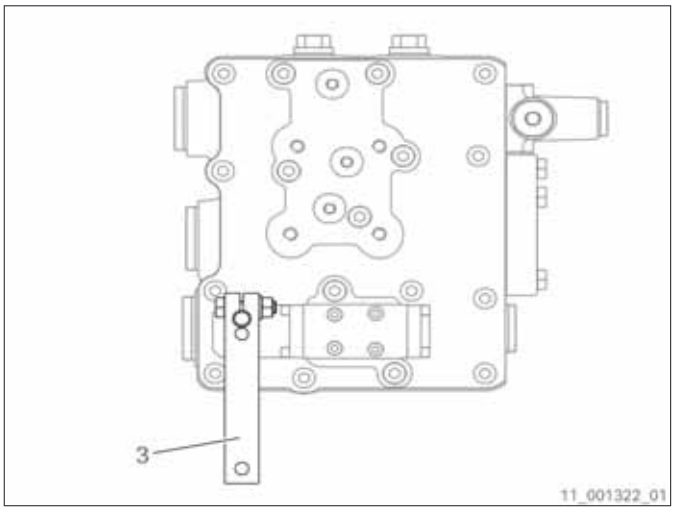

Fig. 155

4. In the event of vibration impact, take appropriate action to keep the shift lever fixed in the selected shift position. This ensures that the shift lever does not move into the undefined shift range.

⚠ WARNING

Risk of accident due to incorrect direction of motion.
Death or serious injury possible.
⇨ Ensure correct direction of motion.

Move the shift lever (3) by hand into the desired counter-rotation (A) or enginewise rotation (B) shift position as far as it will go.

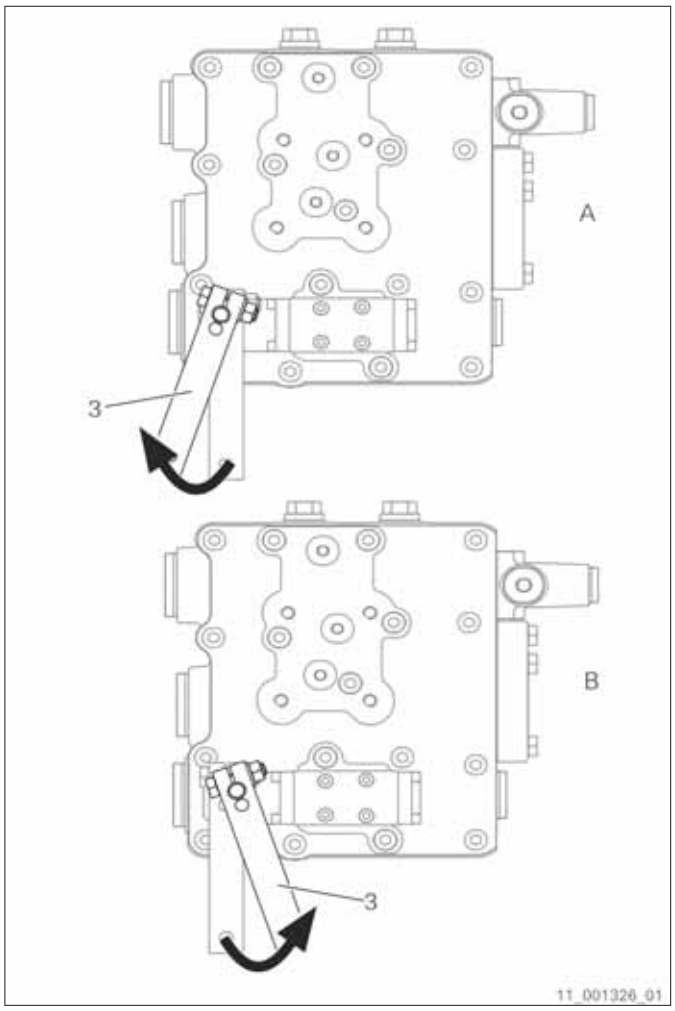

Fig. 156

5. Check correct direction of motion.

6.1.4.3.2 Switching from counter-rotation shift position to enginewise rotation shift position

This switchover process is only possible on reverse transmissions.

⚠ CAUTION

Risk of burn injuries due to contact with hot surfaces.
Slight or moderate injury possible.
⇨ Wear protective gloves.

1. Set the engine speed adjustment to idling speed and wait until the ship speed has dropped to such an extent that the engine is not switched off during the switchover process.

2. Move the shift lever (3) by hand into the neutral shift position and lock it into place.

3. Stay in this position for approx. 0.5 s.

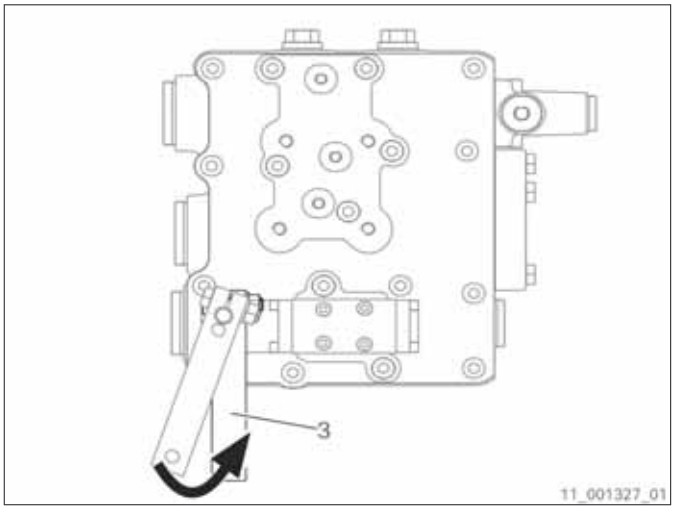

Fig. 157

4. Move the shift lever (3) by hand into the enginewise rotation shift position as far as it will go.

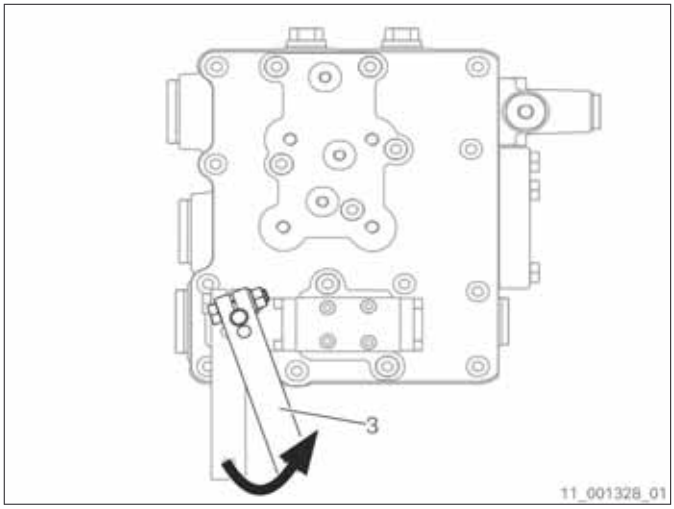

Fig. 158

5. Check correct direction of motion.

6.1.4.3.3 Switching from enginewise rotation shift position to counter-rotation shift position

This switchover process is only possible on reverse transmissions.

⚠ CAUTION

Risk of burn injuries due to contact with hot surfaces.
Slight or moderate injury possible.
⇨ Wear protective gloves.

1. Set the engine speed adjustment to idling speed and wait until the ship speed has dropped to such an extent that the engine is not switched off during the switchover process.

2. Move the shift lever (3) by hand into the neutral shift position and lock it into place.

3. Stay in this position for approx. 0.5 s.

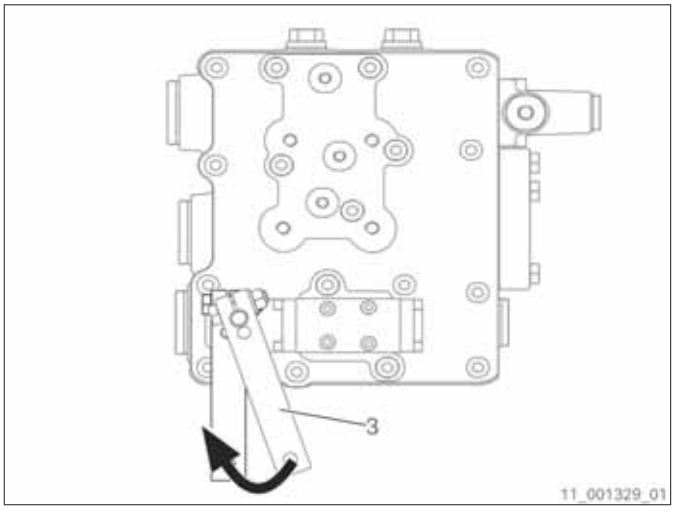

Fig. 159

4. Move the shift lever (3) by hand into the counter-rotation shift position as far as it will go.

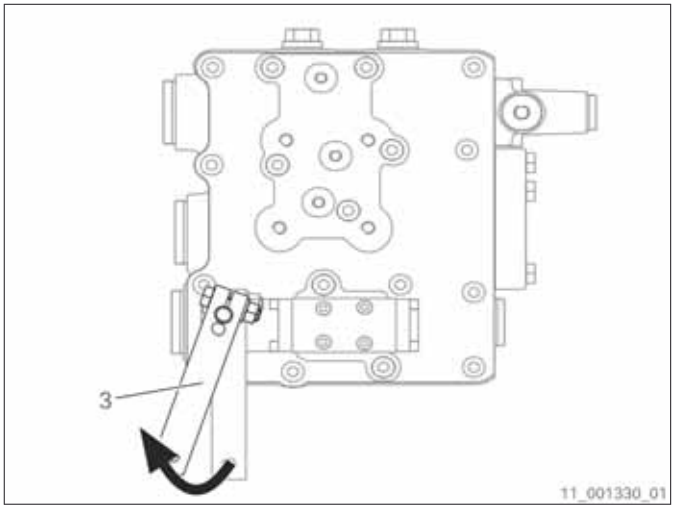

Fig. 160

5. Check correct direction of motion.

6.1.4.3.4 Switching off the mechanical emergency actuation

⚠ CAUTION

Risk of burn injuries due to contact with hot surfaces.
Slight or moderate injury possible.
⇨ Wear protective gloves.

1. Set the engine speed adjustment to idling speed.

2. Move the shift lever (3) by hand from its current shift position into the neutral shift position.

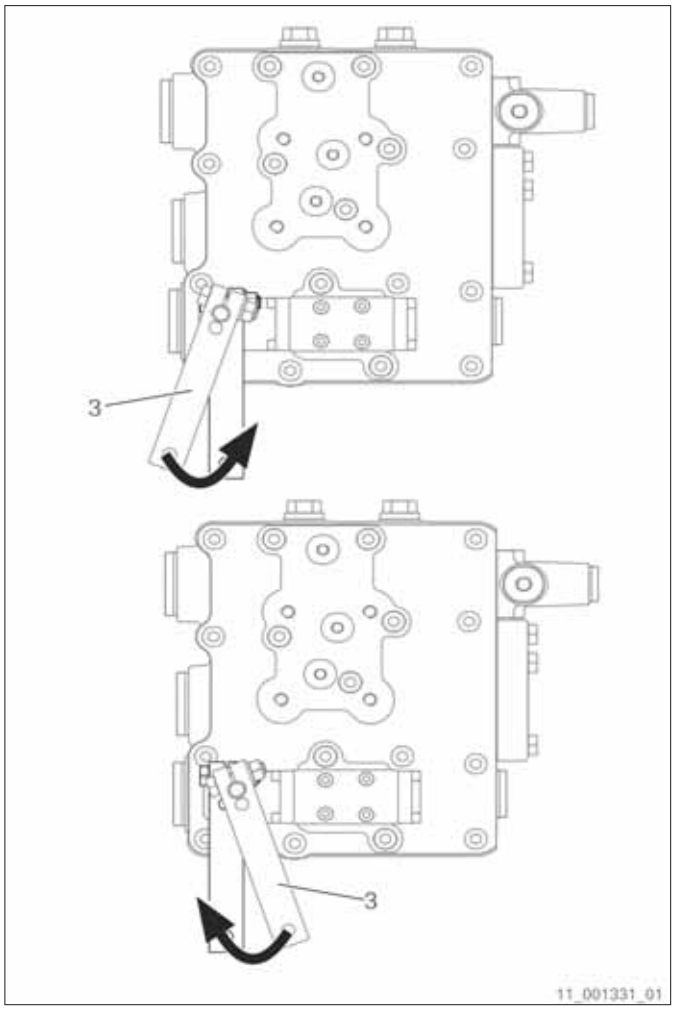

Fig. 161

3. Move the drive lever into the neutral shift position.

4. Hitch the pull-push cable or the linkage of the mechanical remote actuation to the shift lever (3).

5. Check the actuation of all shift positions on the drive lever.

6.2 Operating elements of the power take-in

The electric transmission actuation is part of the standard scope of supply.

Design the operating elements of transmission versions with a power take-in in such a manner that impermissible operating states are avoided. An operating state selected using an operating element is only valid if all conditions for a safe operation are fulfilled.

The operating elements are not part of the ZF scope of supply.

The following operating states are possible:

- Driving with main drive
  Operation with a diesel engine only.
- Driving with power take-in
  Operation with an electric motor or an additional diesel engine only.
- Boost mode
  Operation with a diesel engine and an electric motor or an additional diesel engine at the same time.
- Generator operation
  The electric motor or auxiliary diesel engine drives a generator via the power take-in.

The transmission features sensors and actuators, but no programmable controller. Blocking operating states has to occur on a superordinated actuation unit.

The superordinated actuation unit is not part of the ZF scope of supply.

With the electric transmission actuation, the control valve is axially moved in the control unit by means of oil pressure via an electric actuation unit installed on the control unit.

To ensure that the control can be implemented with the electric transmission actuation, take the mechanical emergency actuation out of operation.

Prior to commencing travel, ensure that the main drive's mechanical emergency actuation of the transmission actuation is not active.

With the power take-in's electric transmission actuation, the control valve is axially moved in the valve block by means of oil pressure via an electric actuation unit installed on the valve block.

To ensure that the control can be implemented with the electric transmission actuation, take the mechanical emergency actuation out of operation.

Prior to commencing travel, ensure that the power take-in's mechanical emergency actuation of the transmission actuation is not active or the pushbutton (a) of the mechanical emergency actuation has been pressed.

Transmission	Number of solenoid valves in the main drive	Number of solenoid valves in the power take-in	Function keep shift position in the event of power failure is available	Section
ZF 3300 family without NR	2 • Counter-rotation • Enginewise rotation	2 • Clutch open • Clutch closed	Main drive: no Power take-in: yes	*(refer to section Electric actuation unit of the main drive of ZF 3300 family without NR, page 226)* *(refer to section Electric actuation unit of the power take-in, page 246)*
ZF 3300 NR (counter-rotation) family	2 • Counter-rotation • Neutral	2 • Clutch open • Clutch closed	Main drive: yes Power take-in: yes	*(refer to section Electric actuation unit of the main drive of ZF 3300 NR (counter-rotation) family, page 234)* *(refer to section Electric actuation unit of the power take-in, page 246)*
ZF 3300 NR (enginewise rotation) family	2 • Enginewise rotation • Neutral	2 • Clutch open • Clutch closed	Main drive: yes Power take-in: yes	*(refer to section Electric actuation unit of the main drive of ZF 3300 NR (enginewise rotation) family, page 240)* *(refer to section Electric actuation unit of the power take-in, page 246)*

Tab. 27 Variants of the electric transmission actuation with power take-in

6.2.1 Electric actuation unit of the main drive of ZF 3300 family without NR

6.2.1.1 Elements of the electric actuation unit

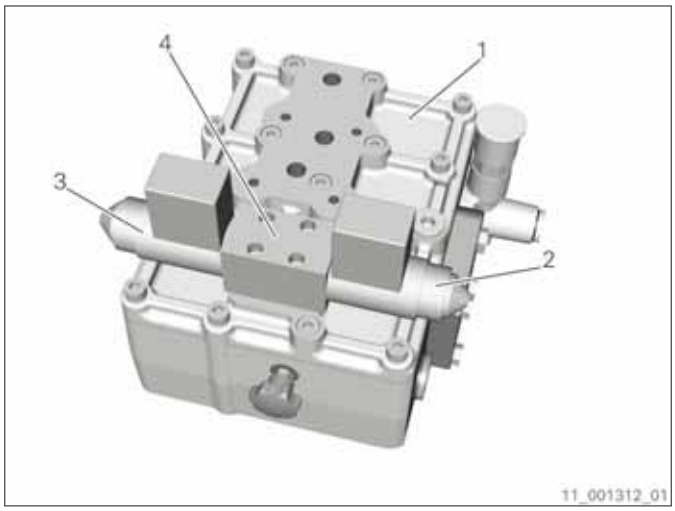

Fig. 162

1 Control unit
2 Solenoid valve (b) for the counter-rotation shift position
3 Solenoid valve (a) for the enginewise rotation shift position
4 Pilot valve for the counter-rotation and enginewise rotation shift positions

The solenoid valve (3) facing the output is responsible for an output rotation direction that is the same as the direction of drive rotation.

The solenoid valve (2) opposite of the output is responsible for an output rotation direction that is opposite to the direction of drive rotation.

⚠ DANGER

Risk of injury due to rotating parts.
Death or serious injury probable.
⇨ Install propshaft brake or propshaft lock.

The transmission clutch is open in the neutral shift position. The propshaft, however, continues to turn. If a standing propshaft is necessary, provide a propshaft brake or another type of propshaft lock.

NOTICE

Property damage due to rotating power take-in's input shaft possible.
⇨ Install shaft brake.

When open, the power take-in's hydraulic multidisk clutch has a drag torque caused by the oil flow. Thus, the power take-in's input shaft might rotate when the multidisk clutch is open. To avoid damaging the electric motor and the power electronics during operation with the main drive, provide a shaft brake for the power take-in's input shaft.

⚠ WARNING

Risk of accident due to a non-functioning control element.
Death or serious injury possible.
⇨ Adapt driving method when on open waters.
⇨ Do not drive in tight and heavily-frequented waters.
⇨ Allow the ship to be towed.

In the event of power failure, the transmission switches into the neutral shift position. This may result in the ship being unmaneuverable.

6.2.1.2 Mechanical emergency actuation

In the event of malfunctions in the actuation unit, the transmission can be mechanically actuated by hand with the aid of a headless screw. In doing so, the control piston is axially moved.

⚠ WARNING

Risk of accident due to insufficient access to the emergency actuation tool.
Death or serious injury possible.
⇨ Ensure free access.

⚠ WARNING

Risk of accident due to insufficient clearance around the mechanical emergency actuation.
Death or serious injury possible.
⇨ Ensure clearance of at least 20 cm.

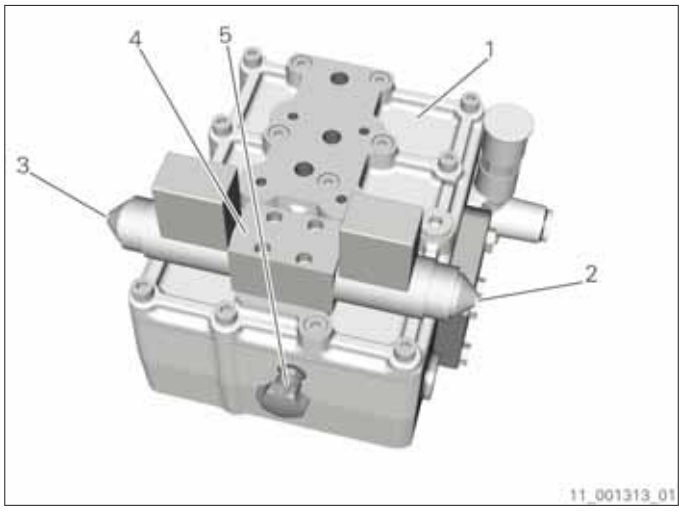

Fig. 163

1 Control unit
2 Headless screw of solenoid valve (b)
3 Headless screw of solenoid valve (a)
4 Pilot valve for the counter-rotation and enginewise rotation shift positions
5 Hexagon socket wrench for the mechanical emergency actuation

The mechanical emergency actuation of the solenoid valves (2, 3) is manually activated using a headless screw. The headless screw is positioned on the solenoid valve's front. A hexagon socket wrench (5) with a

width across flats of 3 mm, which can be used to actuate the headless screw, is attached to the control unit.

There are two positions for the headless screw that are noticeable upon reaching a stop. An intermediate position is not permissible.

The two positions are defined as follows

- The headless screw has been unscrewed and protrudes approx. 0.2-0.3 mm from the plane surface.
- The headless screw has been screwed in to approx. 6.0-6.2 mm below the plane surface.

6.2.1.2.1 Neutral shift position

The headless screw (3) of the solenoid valve (a) has been unscrewed and protrudes approx. 0.2-0.3 mm from the plane surface.

The headless screw (2) of the solenoid valve (b) has been unscrewed and protrudes approx. 0.2-0.3 mm from the plane surface.

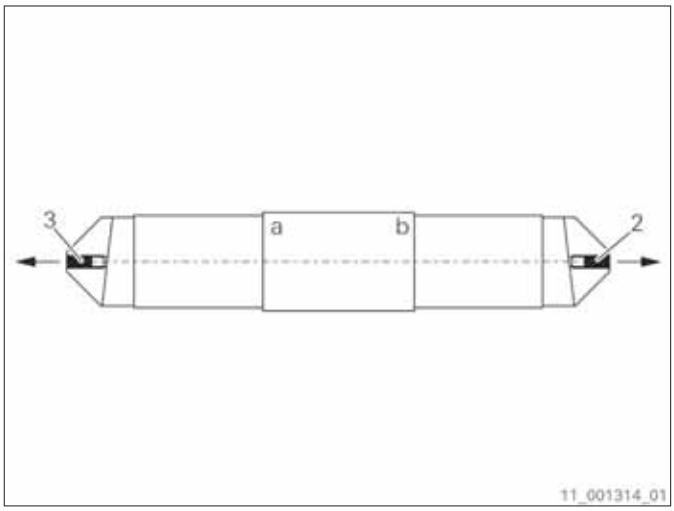

Fig. 164

6.2.1.2.2 Counter-rotation shift position

The headless screw (3) of the solenoid valve (a) has been unscrewed and protrudes approx. 0.2-0.3 mm from the plane surface.

The headless screw (2) of the solenoid valve (b) has been screwed in to a distance A of approx. 6.0-6.2 mm below the plane surface.

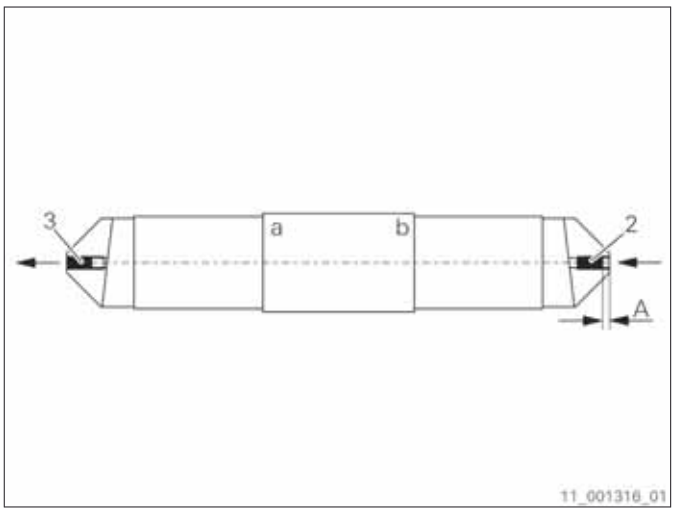

Fig. 165

6.2.1.2.3 Enginewise rotation shift position

The headless screw (3) of the solenoid valve (a) has been screwed in to a distance A of approx. 6.0-6.2 mm below the plane surface.

The headless screw (2) of the solenoid valve (b) has been unscrewed and protrudes approx. 0.2-0.3 mm from the plane surface.

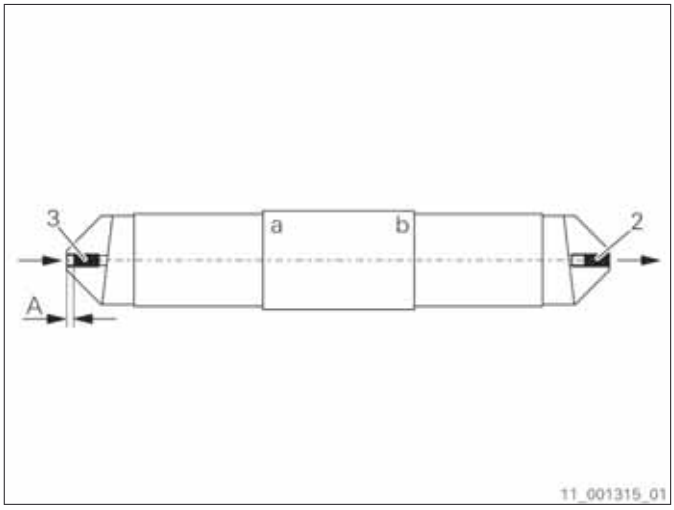

Fig. 166

6.2.1.3 Operation with mechanical emergency actuation

⚠ WARNING

Risk of accident due to a non-functioning control element.
Death or serious injury possible.

⇨ Adapt driving method when on open waters.
⇨ Do not drive in tight and heavily-frequented waters.
⇨ Allow the ship to be towed.

The clutch set by the mechanical emergency actuation is always closed while the engine is running. The transmission that is mechanically actuated as an emergency cannot be shifted into the neutral shift position or, in the event of reverse transmissions, reversed using the drive lever.

6.2.1.3.1 Switching on the mechanical emergency actuation

ⓘ Prior to commencing travel, ensure that the emergency actuation tool is available on the control unit.

⚠ CAUTION

Risk of burn injuries due to contact with hot surfaces.
Slight or moderate injury possible.

⇨ Wear protective gloves.

1. Switch off the main drive's electric transmission actuation:
   - Switch off the transmission actuation.
   - Remove the plugs from the solenoid valves.

2. Switch off the power take-in's electric transmission actuation:
   - Switch off the transmission actuation.
   - Remove the electric actuation unit plugs.

3. Press pushbutton (1) of power take-in's actuation unit for 1-2 s.

   → The power take-in clutch is open.

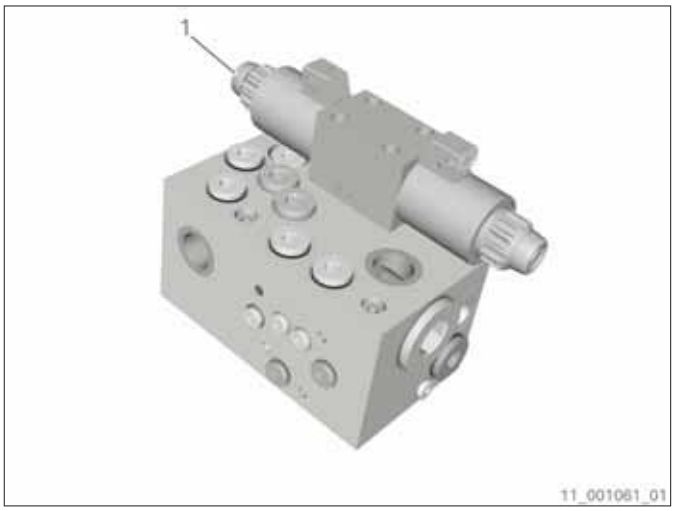

Fig. 167

4. Set the engine speed adjustment to idling speed.

5. **⚠ WARNING**

   Risk of accident due to incorrect direction of motion.
   Death or serious injury possible.
   ⇨ Ensure correct direction of motion.

   Screw in headless screw (2) or (3) of the solenoid valve that corresponds to the desired shift position to approx. 6.0-6.2 mm as far as it will go using the emergency actuation tool.

6. Check correct direction of motion.

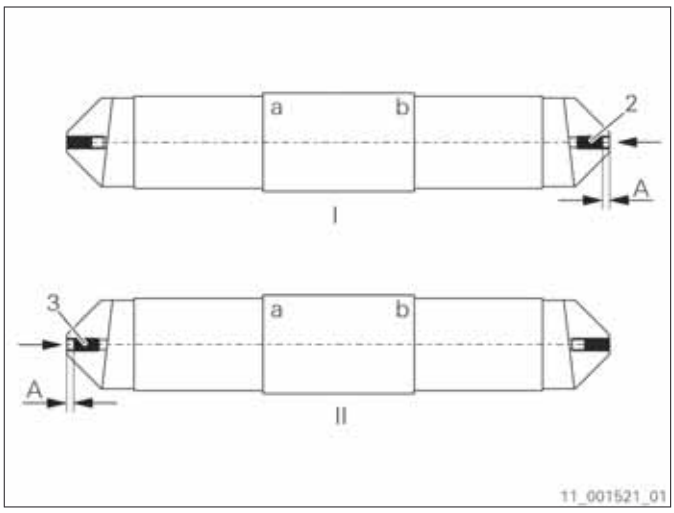

Fig. 168

I Counter-rotation shift position
II Enginewise rotation shift position

7. Screw the emergency actuation tool back into the corresponding receiver on the control unit.

6.2.1.3.2 Switching from counter-rotation shift position to enginewise rotation shift position

This switchover process is only possible on reverse transmissions.

⚠ CAUTION

Risk of burn injuries due to contact with hot surfaces.
Slight or moderate injury possible.
⇨ Wear protective gloves.

1. Set the engine speed adjustment to idling speed and wait until the ship speed has dropped to such an extent that the engine is not switched off during the switchover process.

2. Unscrew the headless screws (2, 3) of both solenoid valves (a) and (b) as far as they will go using the emergency actuation tool.

   → The headless screws (2, 3) have been unscrewed and protrude approx. 0.2-0.3 mm from the plane surface.

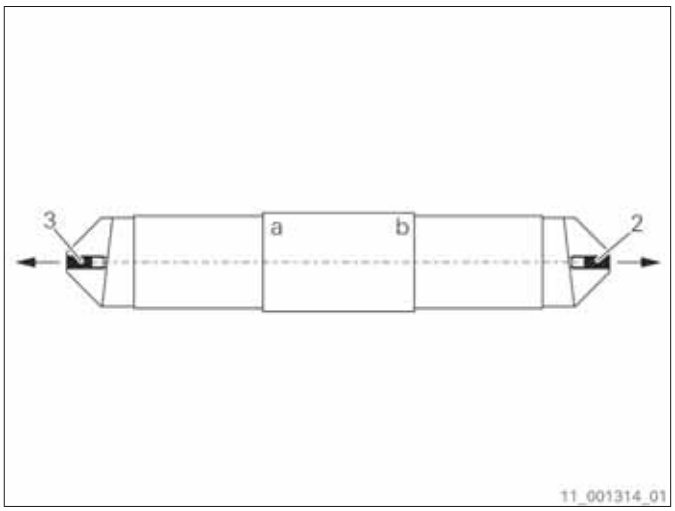

Fig. 169

3. Screw in the headless screw (3) of the solenoid valve (a) to approx. 6.0-6.2 mm as far as it will go using the emergency actuation tool.

4. Check correct direction of motion.

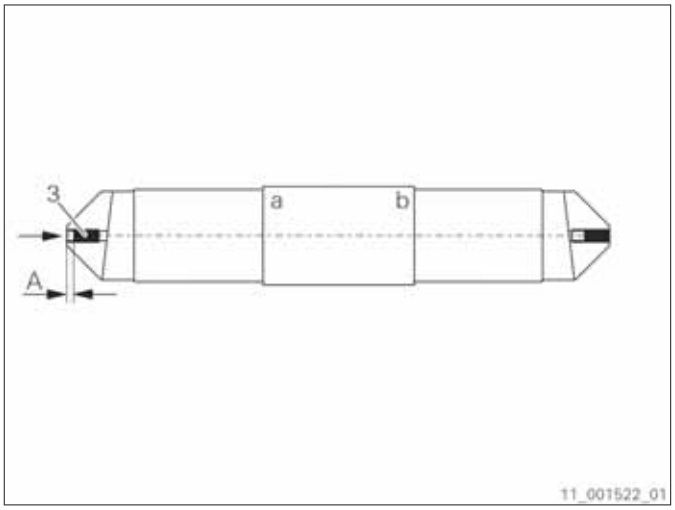

Fig. 170

5. Screw the emergency actuation tool back into the corresponding receiver on the control unit.

6.2.1.3.3 Switching from enginewise rotation shift position to counter-rotation shift position

This switchover process is only possible on reverse transmissions.

⚠ CAUTION

Risk of burn injuries due to contact with hot surfaces.
Slight or moderate injury possible.
⇨ Wear protective gloves.

1. Set the engine speed adjustment to idling speed and wait until the ship speed has dropped to such an extent that the engine is not switched off during the switchover process.

2. Unscrew the headless screws (2, 3) of both solenoid valves (a) and (b) as far as they will go using the emergency actuation tool.

   → The headless screws (2, 3) have been unscrewed and protrude approx. 0.2-0.3 mm from the plane surface.

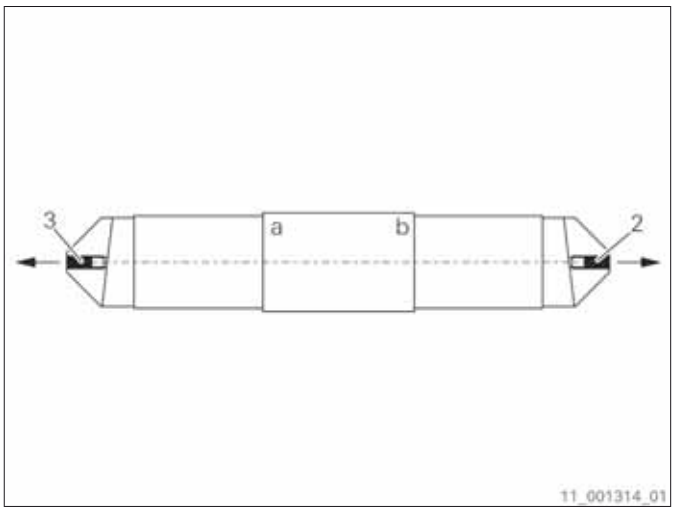

Fig. 171

3. Screw in the headless screw (2) of the solenoid valve (b) to approx. 6.0-6.2 mm as far as it will go using the emergency actuation tool.

4. Check correct direction of motion.

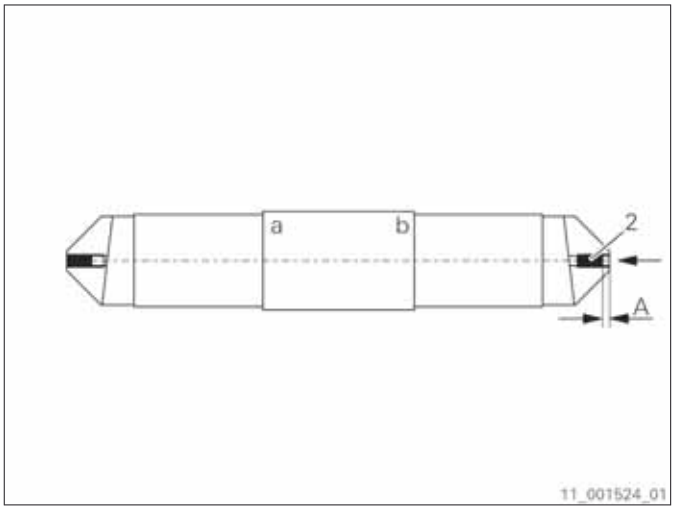

Fig. 172

5. Screw the emergency actuation tool back into the corresponding receiver on the control unit.

6.2.1.3.4 Switching off the mechanical emergency actuation

⚠ CAUTION

Risk of burn injuries due to contact with hot surfaces.
Slight or moderate injury possible.
⇨ Wear protective gloves.

1. Set the engine speed adjustment to idling speed.

2. Unscrew the headless screws (2, 3) of both solenoid valves (a) and (b) as far as they will go using the emergency actuation tool.

   → The headless screws (2, 3) have been unscrewed and protrude approx. 0.2-0.3 mm from the plane surface.

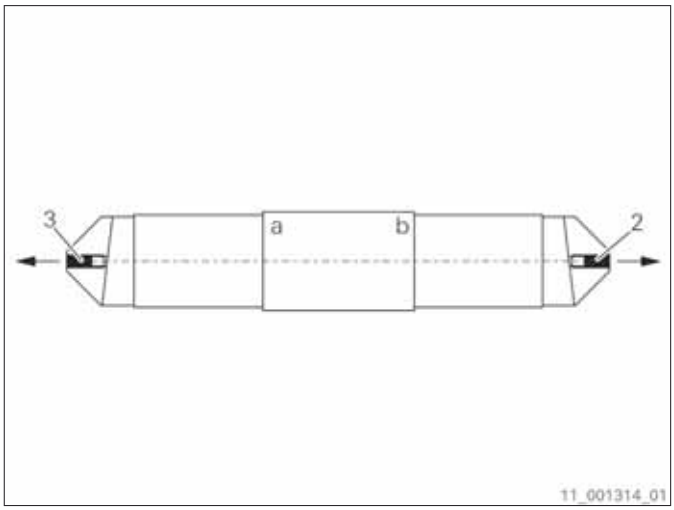

Fig. 173

3. Screw the emergency actuation tool back into the corresponding receiver on the control unit.

4. Move the drive lever into the neutral shift position.

5. Switch on the main drive's electric transmission actuation:
   - Switch on the transmission actuation.
   - Connect the solenoid valve plugs.

6. Switch on the power take-in's electric transmission actuation:
   - Switch on the transmission actuation.
   - Connect the electric actuation unit plugs.

7. Check the actuation of all shift positions on the drive lever.

6.2.2 Electric actuation unit of the main drive of ZF 3300 NR (counter-rotation) family

6.2.2.1 Elements of the electric actuation unit

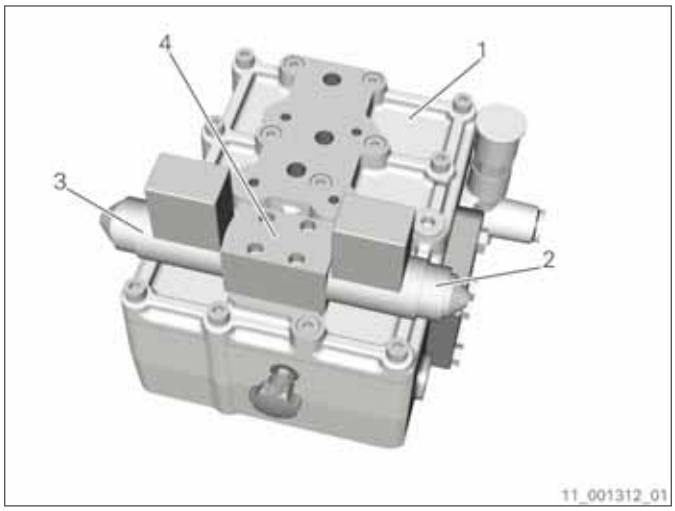

Fig. 174

1 Control unit
2 Solenoid valve (b) for the counter-rotation shift position
3 Solenoid valve (a) for the neutral shift position
4 Pilot valve for the counter-rotation and neutral shift positions

The solenoid valve (3) facing the output is responsible for the neutral shift position.

The solenoid valve (2) opposite of the output is responsible for an output rotation direction that is opposite to the direction of drive rotation.

⚠ DANGER

Risk of injury due to rotating parts.
Death or serious injury probable.
⇨ Install propshaft brake or propshaft lock.

The transmission clutch is open in the neutral shift position. The propshaft, however, continues to turn. If a standing propshaft is necessary, provide a propshaft brake or another type of propshaft lock.

NOTICE

Property damage due to rotating power take-in's input shaft possible.
⇨ Install shaft brake.

When open, the power take-in's hydraulic multidisk clutch has a drag torque caused by the oil flow. Thus, the power take-in's input shaft might rotate when the multidisk clutch is open. To avoid damaging the electric motor and the power electronics during operation with the main drive, provide a shaft brake for the power take-in's input shaft.

⚠ WARNING

Risk of accident due to a non-functioning control element.
Death or serious injury possible.

⇨ Adapt driving method when on open waters.
⇨ Do not drive in tight and heavily-frequented waters.
⇨ Allow the ship to be towed.

In case of power failure, the current shift position remains in place.

6.2.2.2 Mechanical emergency actuation

In the event of malfunctions in the actuation unit, the transmission can be mechanically actuated by hand with the aid of a headless screw. In doing so, the control piston is moved axially.

⚠ WARNING

Risk of accident due to insufficient access to the emergency actuation tool.
Death or serious injury possible.

⇨ Ensure free access.

⚠ WARNING

Risk of accident due to insufficient clearance around the mechanical emergency actuation.
Death or serious injury possible.

⇨ Ensure clearance of at least 20 cm.

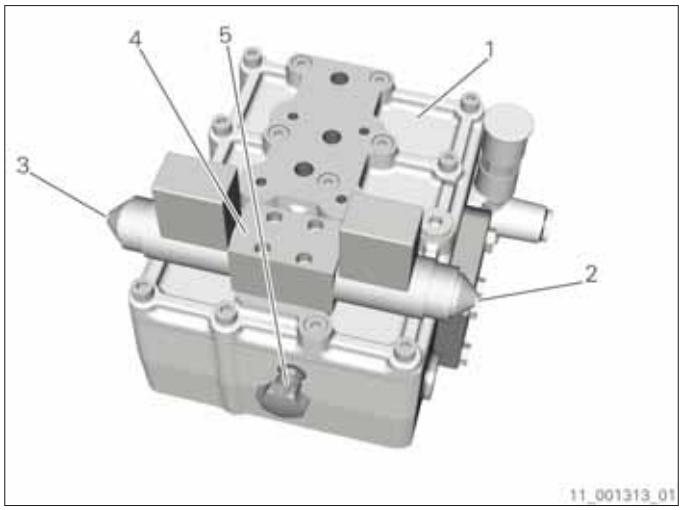

Fig. 175

1 Control unit
2 Headless screw of solenoid valve (b)
3 Headless screw of solenoid valve (a)
4 Pilot valve for the counter-rotation and neutral shift positions
5 Hexagon socket wrench for the mechanical emergency actuation

The mechanical emergency actuation of the solenoid valves (2, 3) is activated by hand using a headless screw. The headless screw is positioned on the solenoid valve's front. A hexagon socket wrench (5) with a

width across flats of 3 mm, which can be used to actuate the headless screw, is attached to the control unit.

There are two positions for the headless screw that are noticeable upon reaching a stop. An intermediate position is not permissible.

The two positions are defined as follows

- The headless screw has been unscrewed and protrudes approx. 0.2-0.3 mm from the plane surface.
- The headless screw has been screwed in to approx. 6.0-6.2 mm below the plane surface.

6.2.2.2.1 Neutral shift position

The headless screw (3) of the solenoid valve (a) has been screwed in to a distance A of approx. 6.0-6.2 mm below the plane surface.

The headless screw (2) of the solenoid valve (b) has been unscrewed and protrudes approx. 0.2-0.3 mm from the plane surface.

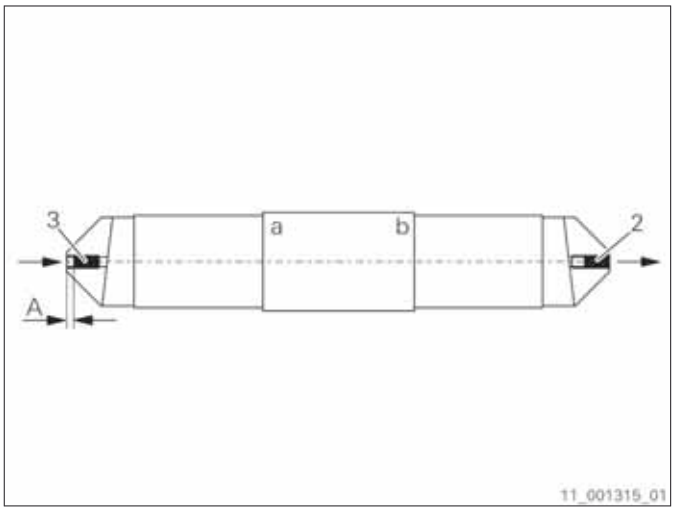

Fig. 176

6.2.2.2.2 Counter-rotation shift position

The headless screw (3) of the solenoid valve (a) has been unscrewed and protrudes approx. 0.2-0.3 mm from the plane surface.

The headless screw (2) of the solenoid valve (b) has been screwed in to a distance A of approx. 6.0-6.2 mm below the plane surface.

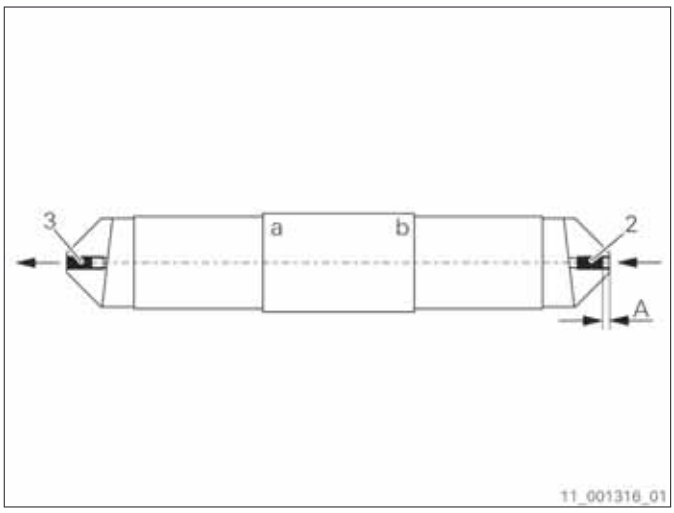

Fig. 177

6.2.2.3 Operation with mechanical emergency actuation

⚠ WARNING

Risk of accident due to a non-functioning control element.
Death or serious injury possible.
⇨ Adapt driving method when on open waters.
⇨ Do not drive in tight and heavily-frequented waters.
⇨ Allow the ship to be towed.

The clutch set by the mechanical emergency actuation is always closed while the engine is running. The transmission that is mechanically actuated as an emergency cannot be shifted into the neutral shift position or, in the event of reverse transmissions, reversed using the drive lever.

6.2.2.3.1 Switching on the mechanical emergency actuation

ⓘ Prior to commencing travel, ensure that the emergency actuation tool is available on the control unit.

⚠ CAUTION

Risk of burn injuries due to contact with hot surfaces.
Slight or moderate injury possible.
⇨ Wear protective gloves.

1. Switch off the main drive's electric transmission actuation:
   - Switch off the transmission actuation.
   - Remove the plugs from the solenoid valves.

2. Switch off the power take-in's electric transmission actuation:
   - Switch off the transmission actuation.
   - Remove the electric actuation unit plugs.

3. Press pushbutton (1) of power take-in's actuation unit for 1-2 s.

   → The power take-in clutch is open.

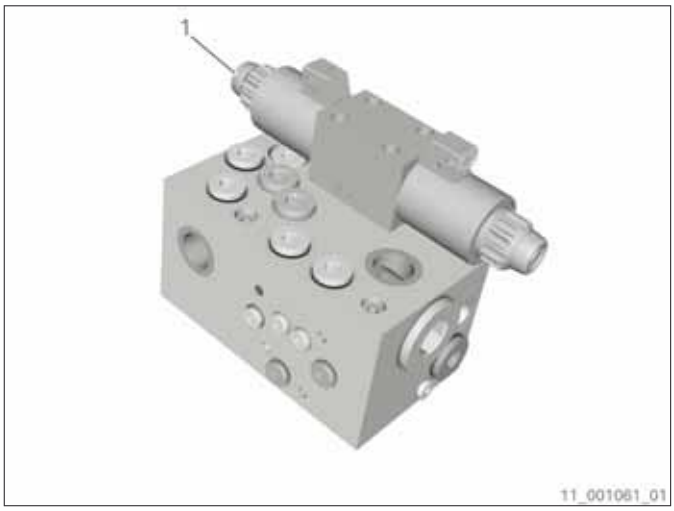

Fig. 178

4. Set the engine speed adjustment to idling speed.

5. **⚠ WARNING**

   Risk of accident due to incorrect direction of motion.
   Death or serious injury possible.
   ⇨ Ensure correct direction of motion.

   Screw in the headless screw (2) of the solenoid valve (b) to approx. 6.0-6.2 mm as far as it will go using the emergency actuation tool.

6. Check correct direction of motion.

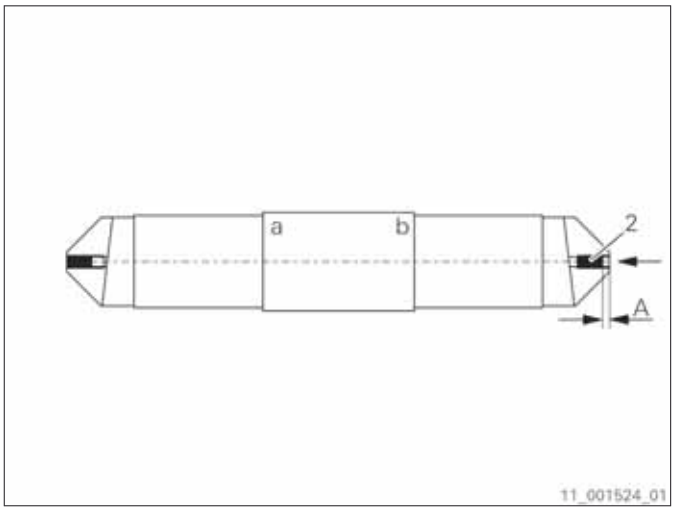

Fig. 179

7. Screw the emergency actuation tool back into the corresponding receiver on the control unit.

6.2.2.3.2 Switching off the mechanical emergency actuation

⚠ CAUTION

Risk of burn injuries due to contact with hot surfaces.
Slight or moderate injury possible.
⇨ Wear protective gloves.

1. Set the engine speed adjustment to idling speed.

2. Unscrew the headless screws (2, 3) of both solenoid valves (a) and (b) as far as they will go using the emergency actuation tool.

   → The headless screws (2, 3) have been unscrewed and protrude approx. 0.2-0.3 mm from the plane surface.

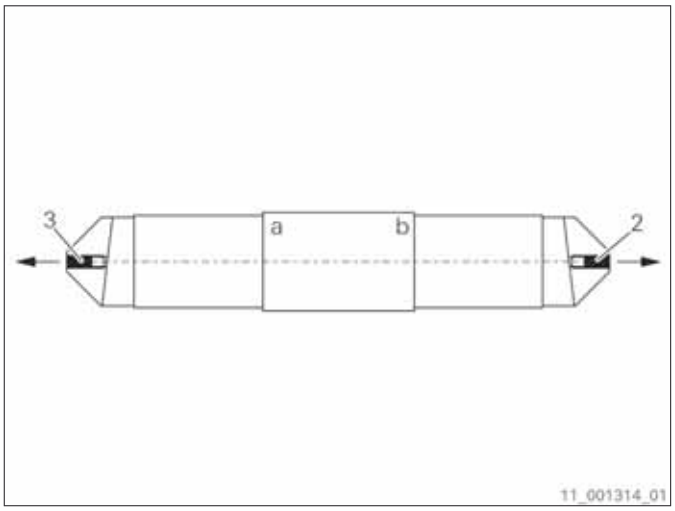

Fig. 180

3. Screw the emergency actuation tool back into the corresponding receiver on the control unit.

4. Move the drive lever into the neutral shift position.

5. Switch on the main drive's electric transmission actuation:
   - Switch on the transmission actuation.
   - Connect the solenoid valve plugs.

6. Switch on the power take-in's electric transmission actuation:
   - Switch on the transmission actuation.
   - Connect the electric actuation unit plugs.

7. Check the actuation of all shift positions on the drive lever.

6.2.3 Electric actuation unit of the main drive of ZF 3300 NR (enginewise rotation) family

6.2.3.1 Elements of the electric actuation unit

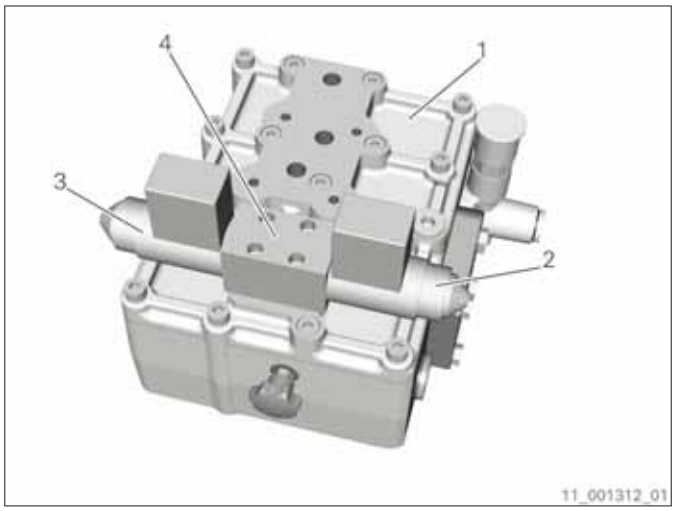

Fig. 181

1 Control unit
2 Solenoid valve (b) for the neutral shift position
3 Solenoid valve (a) for the enginewise rotation shift position
4 Pilot valve for the enginewise rotation and neutral shift positions

The solenoid valve (3) facing the output is responsible for an output rotation direction that is the same as the direction of drive rotation.

The solenoid valve (2) opposite of the output is responsible for the neutral shift position.

⚠ DANGER

Risk of injury due to rotating parts.
Death or serious injury probable.
⇨ Install propshaft brake or propshaft lock.

The transmission clutch is open in the neutral shift position. The propshaft, however, continues to turn. If a standing propshaft is necessary, provide a propshaft brake or another type of propshaft lock.

NOTICE

Property damage due to rotating power take-in's input shaft possible.
⇨ Install shaft brake.

When open, the power take-in's hydraulic multidisk clutch has a drag torque caused by the oil flow. Thus, the power take-in's input shaft might rotate when the multidisk clutch is open. To avoid damaging the electric motor and the power electronics during operation with the main drive, provide a shaft brake for the power take-in's input shaft.

⚠ WARNING

Risk of accident due to a non-functioning control element.
Death or serious injury possible.
⇨ Adapt driving method when on open waters.
⇨ Do not drive in tight and heavily-frequented waters.
⇨ Allow the ship to be towed.

In case of power failure, the current shift position remains in place.

6.2.3.2 Mechanical emergency actuation

In the event of malfunctions in the actuation unit, the transmission can be mechanically actuated by hand with the aid of a headless screw. In doing so, the control piston is axially moved.

⚠ WARNING

Risk of accident due to insufficient access to the emergency actuation tool.
Death or serious injury possible.
⇨ Ensure free access.

⚠ WARNING

Risk of accident due to insufficient clearance around the mechanical emergency actuation.
Death or serious injury possible.
⇨ Ensure clearance of at least 20 cm.

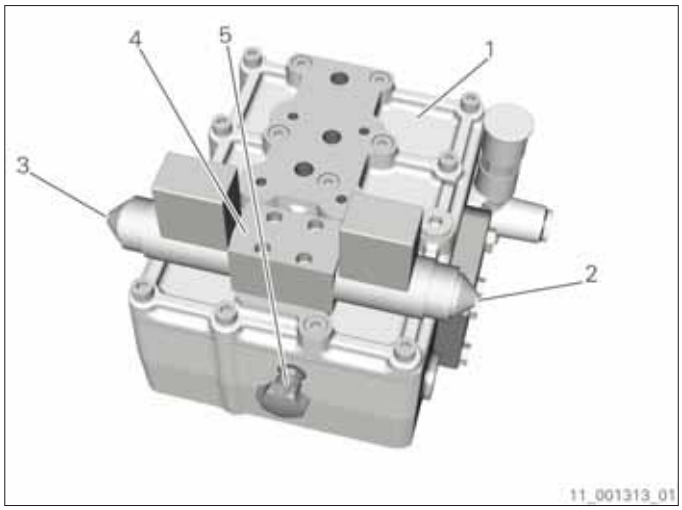

Fig. 182

1 Control unit
2 Headless screw of solenoid valve (b)
3 Headless screw of solenoid valve (a)
4 Pilot valve for the enginewise rotation and neutral shift positions
5 Hexagon socket wrench for the mechanical emergency actuation

The mechanical emergency actuation of the solenoid valves (2, 3) is manually activated using a headless screw. The headless screw is positioned on the solenoid valve's front. A hexagon socket wrench (5) with a

width across flats of 3 mm, which can be used to actuate the headless screw, is attached to the control unit.

There are two positions for the headless screw that are noticeable upon reaching a stop. An intermediate position is not permissible.

The two positions are defined as follows

- The headless screw has been unscrewed and protrudes approx. 0.2-0.3 mm from the plane surface.
- The headless screw has been screwed in to approx. 6.0-6.2 mm below the plane surface.

6.2.3.2.1 Neutral shift position

The headless screw (3) of the solenoid valve (a) has been unscrewed and protrudes approx. 0.2-0.3 mm from the plane surface.

The headless screw (2) of the solenoid valve (b) has been screwed in to a distance A of approx. 6.0-6.2 mm below the plane surface.

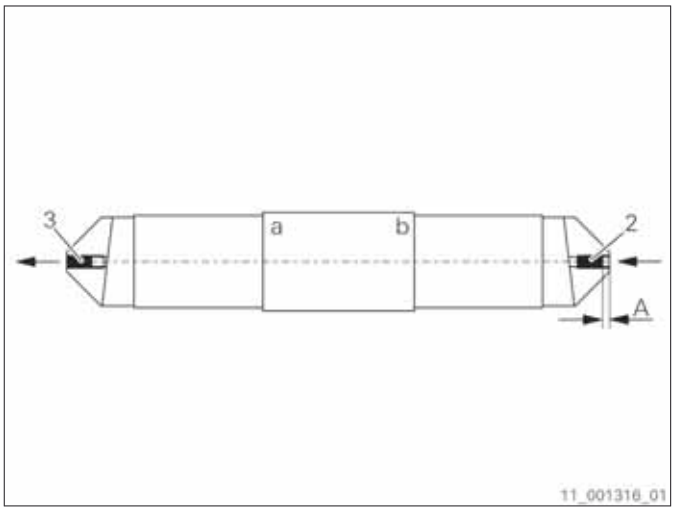

Fig. 183

6.2.3.2.2 Enginewise rotation shift position

The headless screw (3) of the solenoid valve (a) has been screwed in to a distance A of approx. 6.0-6.2 mm below the plane surface.

The headless screw (2) of the solenoid valve (b) has been unscrewed and protrudes approx. 0.2-0.3 mm from the plane surface.

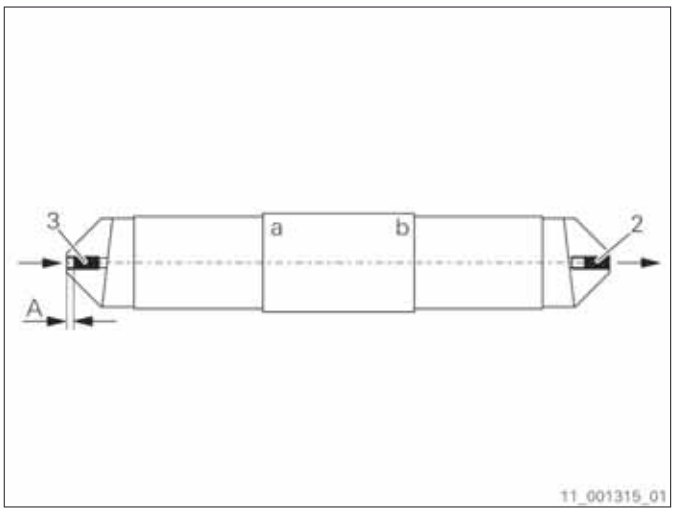

Fig. 184

6.2.3.3 Operation with mechanical emergency actuation

⚠ WARNING

Risk of accident due to a non-functioning control element.
Death or serious injury possible.
⇨ Adapt driving method when on open waters.
⇨ Do not drive in tight and heavily-frequented waters.
⇨ Allow the ship to be towed.

The clutch set by the mechanical emergency actuation is always closed while the engine is running. The transmission that is mechanically actuated as an emergency cannot be shifted into the neutral shift position or, in the event of reverse transmissions, reversed using the drive lever.

6.2.3.3.1 Switching on the mechanical emergency actuation

ⓘ Prior to commencing travel, ensure that the emergency actuation tool is available on the control unit.

⚠ CAUTION

Risk of burn injuries due to contact with hot surfaces.
Slight or moderate injury possible.
⇨ Wear protective gloves.

1. Switch off the main drive's electric transmission actuation:
   - Switch off the transmission actuation.
   - Remove the plugs from the solenoid valves.

2. Switch off the power take-in's electric transmission actuation:
   - Switch off the transmission actuation.
   - Remove the electric actuation unit plugs.

3. Press pushbutton (1) of power take-in's actuation unit for 1-2 s.

   → The power take-in clutch is open.

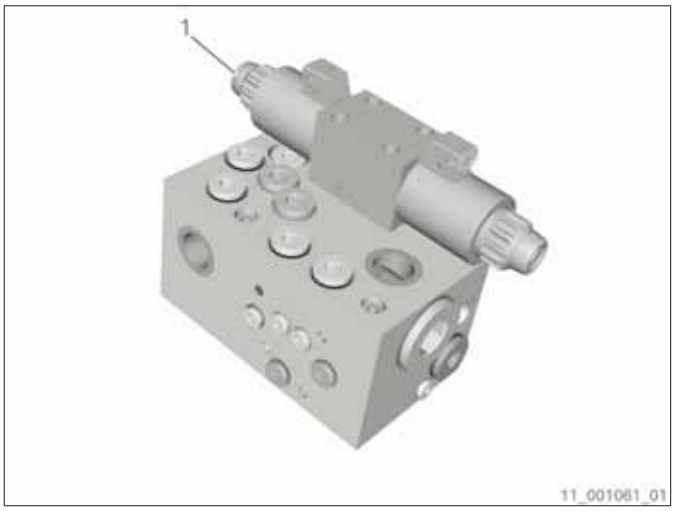

Fig. 185

4. Set the engine speed adjustment to idling speed.

5. **⚠ WARNING**

   Risk of accident due to incorrect direction of motion.
   Death or serious injury possible.
   ⇨ Ensure correct direction of motion.

   Screw in the headless screw (3) of the solenoid valve (a) to approx. 6.0-6.2 mm as far as it will go using the emergency actuation tool.

6. Check correct direction of motion.

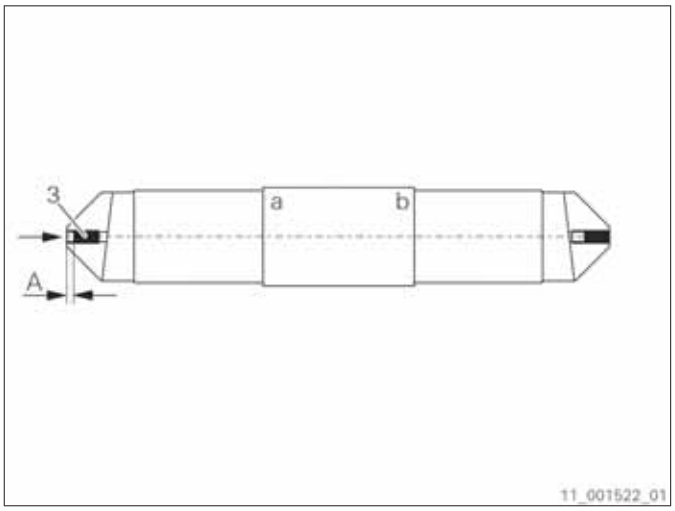

Fig. 186

7. Screw the emergency actuation tool back into the corresponding receiver on the control unit.

6.2.3.3.2 Switching off the mechanical emergency actuation

⚠ CAUTION

Risk of burn injuries due to contact with hot surfaces.
Slight or moderate injury possible.
⇨ Wear protective gloves.

1. Set the engine speed adjustment to idling speed.

2. Unscrew the headless screws (2, 3) of both solenoid valves (a) and (b) as far as they will go using the emergency actuation tool.

   → The headless screws (2, 3) have been unscrewed and protrude approx. 0.2-0.3 mm from the plane surface.

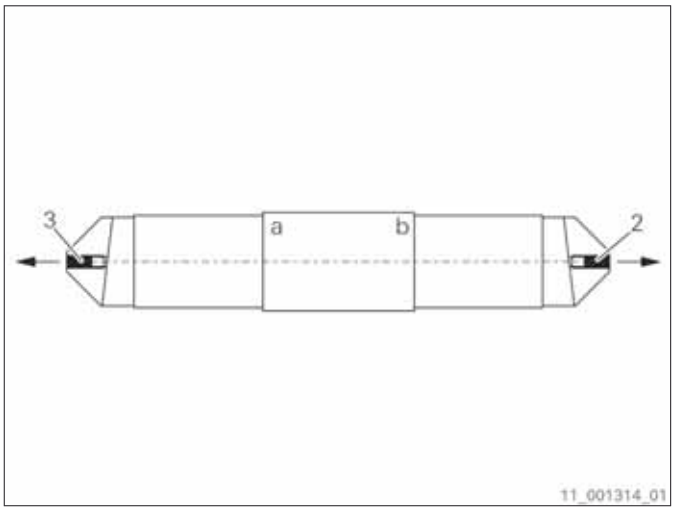

Fig. 187

3. Screw the emergency actuation tool back into the corresponding receiver on the control unit.

4. Move the drive lever into the neutral shift position.

5. Switch on the main drive's electric transmission actuation:
   - Switch on the transmission actuation.
   - Connect the solenoid valve plugs.

6. Switch on the power take-in's electric transmission actuation:
   - Switch on the transmission actuation.
   - Connect the electric actuation unit plugs.

7. Check the actuation of all shift positions on the drive lever.

6.2.4 Electric actuation unit of the power take-in

6.2.4.1 Elements of the electric actuation unit

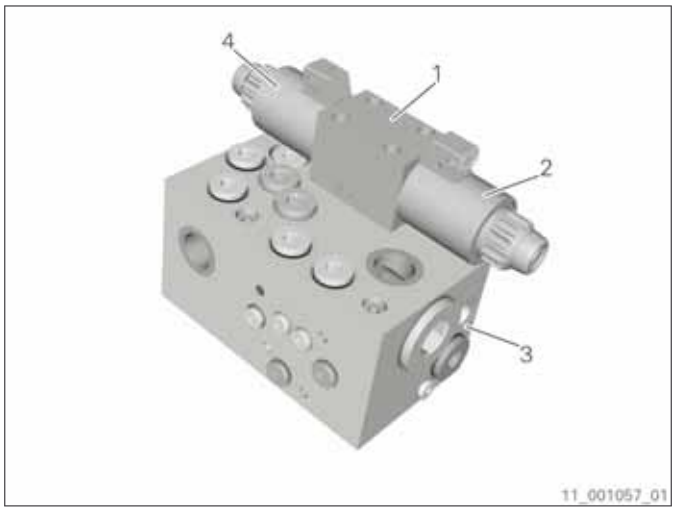

Fig. 188

1 Pilot valve
2 Solenoid for clutch closed shift position
3 Valve block
4 Solenoid for clutch open shift position

⚠ DANGER

Risk of injury due to rotating parts.
Death or serious injury probable.
⇨ Install propshaft brake or propshaft lock.

The transmission clutch is open in the clutch open shift position. The propshaft, however, continues to turn. If a stationary propshaft is necessary, provide a propshaft brake or another type of propshaft lock.

In case of power failure, the current shift position remains in place.

6.2.4.2 Mechanical emergency actuation

In the event of malfunctions in the actuation unit, the transmission can be mechanically actuated by hand with the aid of a pushbutton. In doing so, the control piston is axially moved.

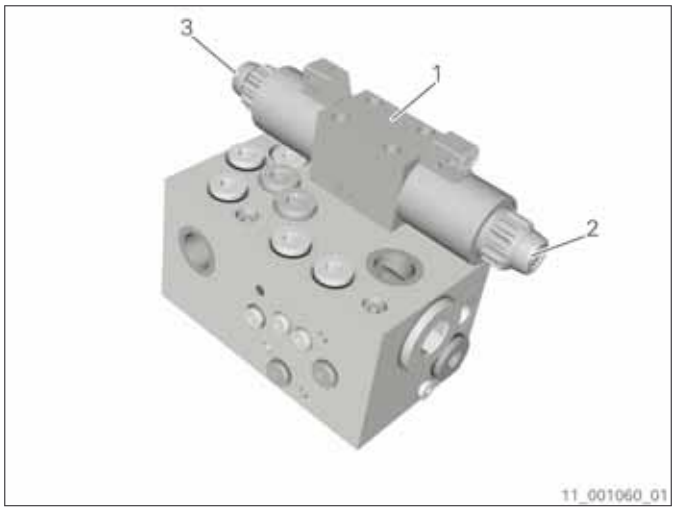

Fig. 189

1 Pilot valve
2 Pushbutton for mechanical emergency actuation of solenoid for clutch closed shift position
3 Pushbutton for mechanical emergency actuation of solenoid for clutch open shift position

6.2.4.3 Operation with mechanical emergency actuation

⚠ WARNING

Risk of accident due to a non-functioning control element.
Death or serious injury possible.
⇨ Adapt driving method when on open waters.
⇨ Do not drive in tight and heavily-frequented waters.
⇨ Allow the ship to be towed.

When the secondary oil pump is running and the solenoid plugs have been removed, the power take-in's clutch set by the mechanical emergency actuation is always closed. The power take-in actuated by the mechanical emergency actuation cannot be opened or closed using the control elements.

6.2.4.3.1 Switching on the mechanical emergency actuation

Requirements:
- Electric transmission actuation and mechanical emergency actuation of the main drive are in neutral shift position.
- The power take-in is not blocked by a brake.

⚠ CAUTION

Risk of burn injuries due to contact with hot surfaces.
Slight or moderate injury possible.
⇨ Wear protective gloves.

1. Switch off the power take-in's electric transmission actuation:
   - Switch off the transmission actuation.
   - Remove the electric actuation unit plugs.

2. Press pushbutton (1) of power take-in's actuation unit for 1-2 s.

   → The power take-in clutch is open.

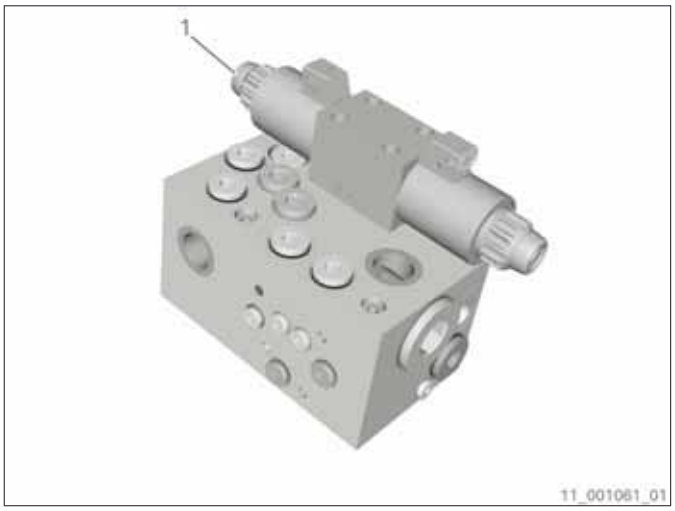

Fig. 190

3. Select driving with power take-in operating mode.

4. Set power take-in's electric motor to zero and de-energize.

5. Switch on power take-in's secondary oil pump.

6. Press pushbutton (2) of power take-in's actuation unit for 1-2 s.

   → Power take-in clutch is closed.

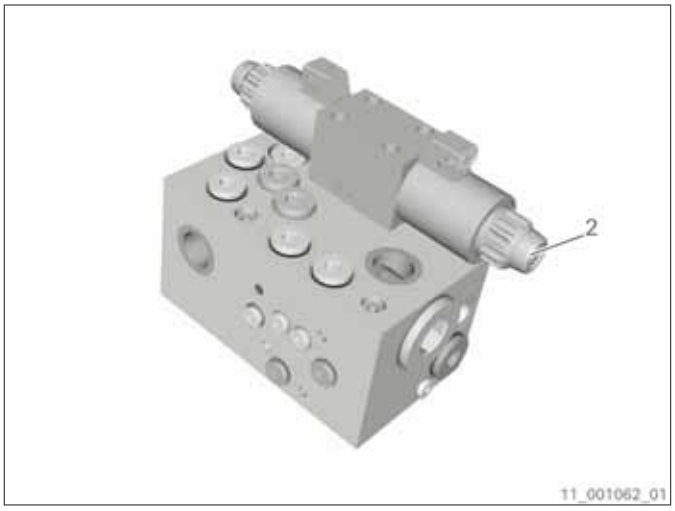

Fig. 191

7. Start power take-in's electric motor with desired direction of rotation and bring to desired operating speed.

8. Check correct direction of motion.

6.2.4.3.2 Switching off the mechanical emergency actuation

⚠ CAUTION

Risk of burn injuries due to contact with hot surfaces.
Slight or moderate injury possible.
⇨ Wear protective gloves.

1. Press pushbutton (1) of power take-in's actuation unit for 1-2 s.

   → The power take-in clutch is open.

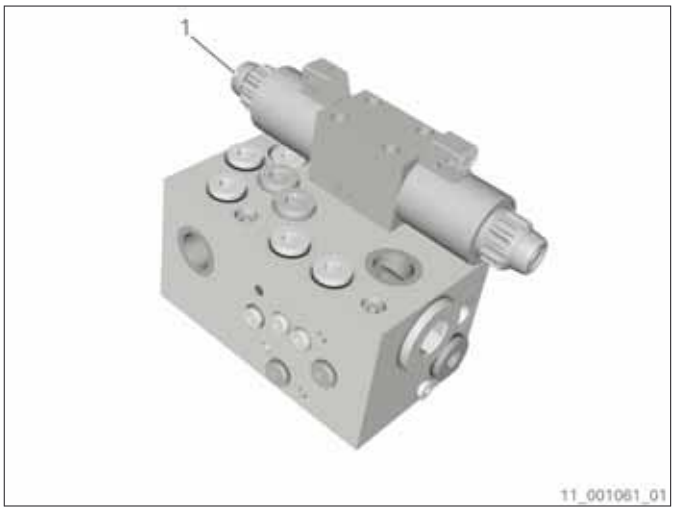

Fig. 192

2. Set power take-in's electric motor to zero.

3. Switch on power take-in's electric transmission actuation:
   - Switch on the transmission actuation.
   - Insert the electric actuation plugs.

4. Check actuation of all shift positions at the power take-in's control elements.

6.3 Operating elements of the shaft brake

The electric transmission actuation and the electric shaft brake actuation are included in the standard scope of supply.

Design the operating elements of transmission versions with a shaft brake in such a manner that impermissible operating states are avoided. An operating state selected using an operating element is only valid if all conditions for a safe operation are fulfilled.

ⓘ The operating elements are not part of the ZF scope of supply.

The following operating states are possible:

- Closing or opening the shaft brake when driving with the main drive
- Closing or opening the shaft brake when engine is not running

The transmission features sensors and actuators, but no programmable controller. Blocking operating states has to occur on a superordinated actuation unit.

The superordinated actuation unit is not part of the ZF scope of supply.

With the electric transmission actuation, the control valve is axially moved in the control unit by means of oil pressure via an electric actuation unit installed on the control unit.

To ensure that the control can be implemented with the electric transmission actuation, take the mechanical emergency actuation out of operation.

Prior to commencing travel, ensure that the main drive's mechanical emergency actuation of the transmission actuation is not active.

With the shaft brake's electric actuation, the control valve is axially moved in the valve block by means of oil pressure via an electric actuation unit installed on the valve block.

Transmission	Number of solenoid valves in the main drive	Number of solenoid valves of the shaft brake	Function keep shift position in the event of power failure is available	Section
ZF 3300 family without NR	2 • Counter-rotation • Enginewise rotation	1 • Clutch closed	Main drive: no Shaft brake: no	*(refer to section Electric actuation unit of the main drive of ZF 3300 family without NR, page 251)* *(refer to section Electric actuation unit of the shaft brake, page 269)*
ZF 3300 NR (counter-rotation) family	2 • Counter-rotation • Neutral	1 • Clutch closed	Main drive: yes Shaft brake: no	*(refer to section Electric actuation unit of the main drive of ZF 3300 NR (counter-rotation) family, page 259)* *(refer to section Electric actuation unit of the shaft brake, page 269)*
ZF 3300 NR (enginewise rotation) family	2 • Enginewise rotation • Neutral	1 • Clutch closed	Main drive: yes Shaft brake: no	*(refer to section Electric actuation unit of the main drive of ZF 3300 NR (enginewise rotation) family, page 264)* *(refer to section Electric actuation unit of the shaft brake, page 269)*

Tab. 28 Variants of the electric transmission actuation with shaft brake

6.3.1 Electric actuation unit of the main drive of ZF 3300 family without NR

6.3.1.1 Elements of the electric actuation unit

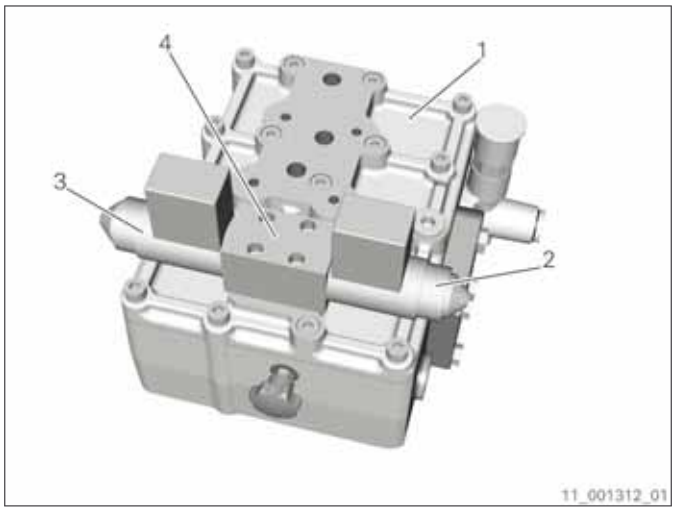

Fig. 193

1 Control unit
2 Solenoid valve (b) for the counter-rotation shift position
3 Solenoid valve (a) for the enginewise rotation shift position
4 Pilot valve for the counter-rotation and enginewise rotation shift positions

The solenoid valve (3) facing the output is responsible for an output rotation direction that is the same as the direction of drive rotation.

The solenoid valve (2) opposite of the output is responsible for an output rotation direction that is opposite to the direction of drive rotation.

⚠ DANGER

Risk of injury due to rotating parts.
Death or serious injury probable.
⇨ Install propshaft brake or propshaft lock.

The transmission clutch is open in the neutral shift position. The propeller shaft, however, continues to turn. If a standing propeller shaft is necessary, provide a propeller shaft brake or another type of propeller shaft lock.

⚠ WARNING

Risk of accident due to a non-functioning control element.
Death or serious injury possible.
⇨ Adapt driving method when on open waters.
⇨ Do not drive in tight and heavily-frequented waters.
⇨ Allow the ship to be towed.

In the event of power failure, the transmission switches into the neutral shift position. This may result in the ship being unmaneuverable.

6.3.1.2 Mechanical emergency actuation

In the event of malfunctions in the actuation unit, the transmission can be mechanically actuated by hand with the aid of a headless screw. In doing so, the control piston is axially moved.

⚠ WARNING

Risk of accident due to insufficient access to the emergency actuation tool.
Death or serious injury possible.
⇨ Ensure free access.

⚠ WARNING

Risk of accident due to insufficient clearance around the mechanical emergency actuation.
Death or serious injury possible.
⇨ Ensure clearance of at least 20 cm.

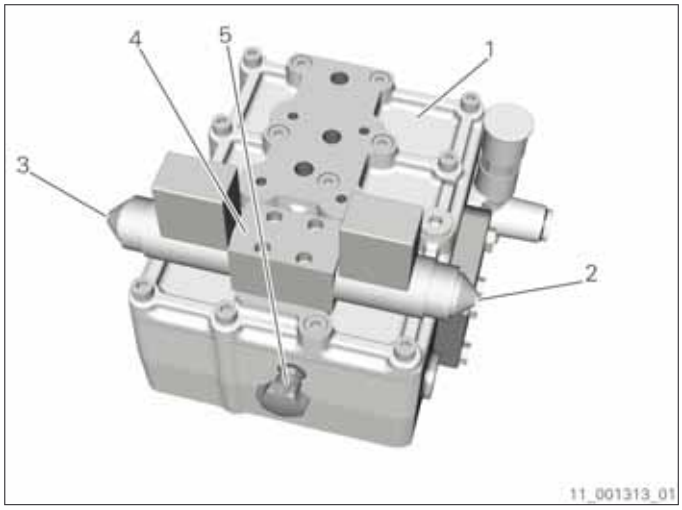

Fig. 194

1 Control unit
2 Headless screw of solenoid valve (b)
3 Headless screw of solenoid valve (a)
4 Pilot valve for the counter-rotation and enginewise rotation shift positions
5 Hexagon socket wrench for the mechanical emergency actuation

The mechanical emergency actuation of the solenoid valves (2, 3) is manually activated using a headless screw. The headless screw is positioned on the solenoid valve's front. A hexagon socket wrench (5) with a width across flats of 3 mm, which can be used to actuate the headless screw, is attached to the control unit.

There are two positions for the headless screw that are noticeable upon reaching a stop. An intermediate position is not permissible.

The two positions are defined as follows

- The headless screw has been unscrewed and protrudes approx. 0.2-0.3 mm from the plane surface.
- The headless screw has been screwed in to approx. 6.0-6.2 mm below the plane surface.

6.3.1.2.1 Neutral shift position

The headless screw (3) of the solenoid valve (a) has been unscrewed and protrudes approx. 0.2-0.3 mm from the plane surface.

The headless screw (2) of the solenoid valve (b) has been unscrewed and protrudes approx. 0.2-0.3 mm from the plane surface.

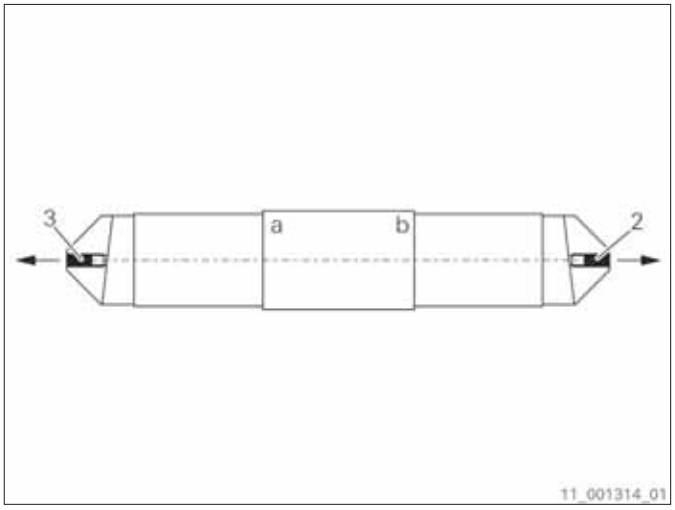

Fig. 195

6.3.1.2.2 Counter-rotation shift position

The headless screw (3) of the solenoid valve (a) has been unscrewed and protrudes approx. 0.2-0.3 mm from the plane surface.

The headless screw (2) of the solenoid valve (b) has been screwed in to a distance A of approx. 6.0-6.2 mm below the plane surface.

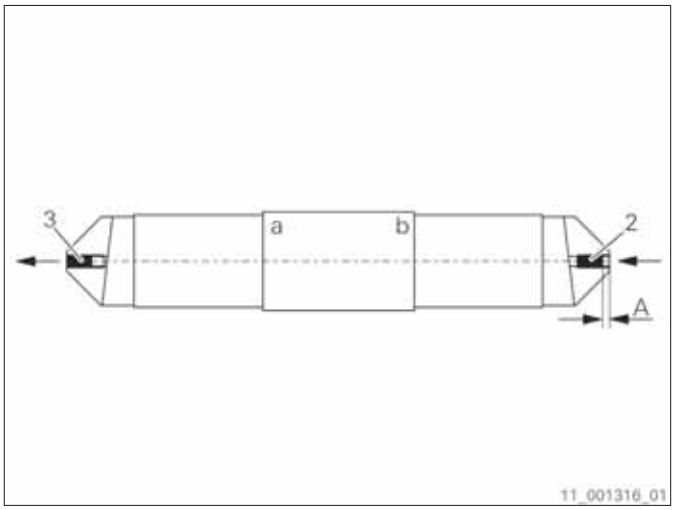

Fig. 196

6.3.1.2.3 Enginewise rotation shift position

The headless screw (3) of the solenoid valve (a) has been screwed in to a distance A of approx. 6.0-6.2 mm below the plane surface.

The headless screw (2) of the solenoid valve (b) has been unscrewed and protrudes approx. 0.2-0.3 mm from the plane surface.

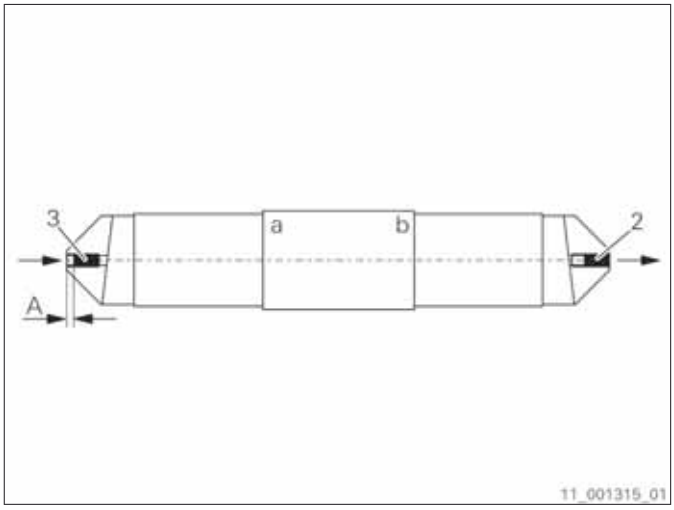

Fig. 197

6.3.1.3 Operation with mechanical emergency actuation

⚠ WARNING

Risk of accident due to a non-functioning control element.
Death or serious injury possible.

⇨ Adapt driving method when on open waters.
⇨ Do not drive in tight and heavily-frequented waters.
⇨ Allow the ship to be towed.

The clutch set by the mechanical emergency actuation is always closed while the engine is running. The transmission that is mechanically actuated as an emergency cannot be shifted into the neutral shift position or, in the event of reverse transmissions, reversed using the drive lever.

6.3.1.3.1 Switching on the mechanical emergency actuation

ⓘ Prior to commencing travel, ensure that the emergency actuation tool is available on the control unit.

⚠ CAUTION

Risk of burn injuries due to contact with hot surfaces.
Slight or moderate injury possible.

⇨ Wear protective gloves.

1. Switch off the main drive's electric transmission actuation:
   - Switch off the transmission actuation.
   - Remove the plugs from the solenoid valves.

2. Switch off the electric shaft brake transmission actuation:
   - Switch off the shaft brake actuation.
   - Remove the electric actuation unit plug.

3. Set the engine speed adjustment to idling speed.

4. **⚠ WARNING**

   Risk of accident due to incorrect direction of motion.
   Death or serious injury possible.
   ⇨ Ensure correct direction of motion.

   Screw in headless screw (2) or (3) of the solenoid valve that corresponds to the desired shift position to approx. 6.0-6.2 mm as far as it will go using the emergency actuation tool.

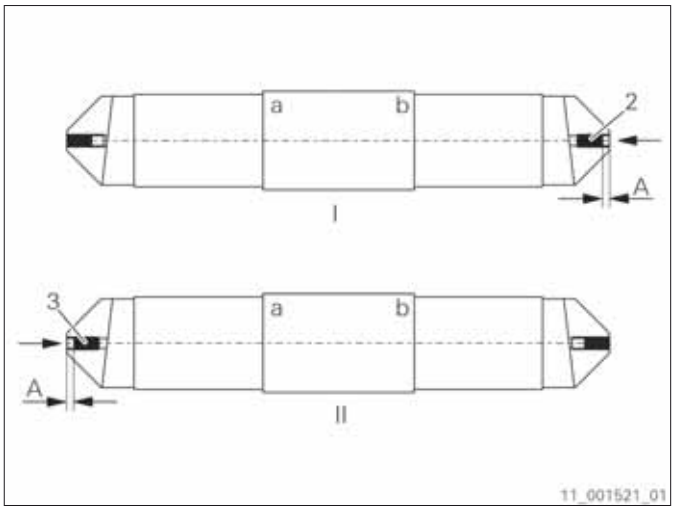

Fig. 198

I Counter-rotation shift position
II Enginewise rotation shift position

5. Check correct direction of motion.

6. Screw the emergency actuation tool back into the corresponding receiver on the control unit.

6.3.1.3.2 Switching from counter-rotation shift position to enginewise rotation shift position

This switchover process is only possible on reverse transmissions.

⚠ CAUTION

Risk of burn injuries due to contact with hot surfaces.
Slight or moderate injury possible.
⇨ Wear protective gloves.

1. Set the engine speed adjustment to idling speed and wait until the ship speed has dropped to such an extent that the engine is not switched off during the switchover process.

2. Unscrew the headless screws (2, 3) of both solenoid valves (a) and (b) as far as they will go using the emergency actuation tool.

   → The headless screws (2, 3) have been unscrewed and protrude approx. 0.2-0.3 mm from the plane surface.

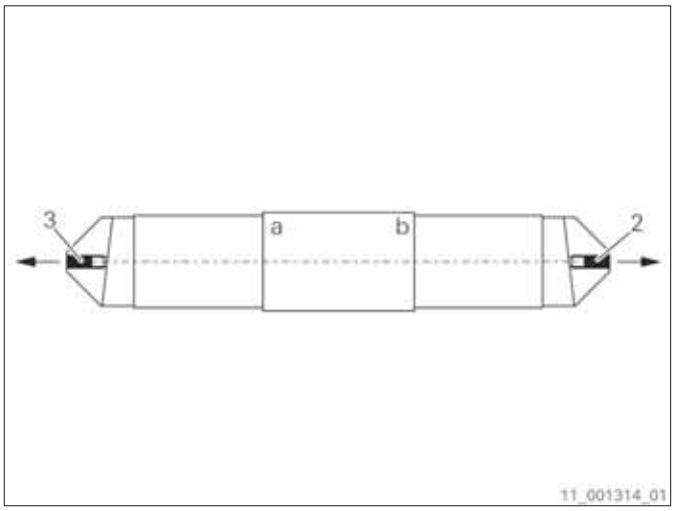

Fig. 199

3. Screw in the headless screw (3) of the solenoid valve (a) to approx. 6.0-6.2 mm as far as it will go using the emergency actuation tool.

4. Check correct direction of motion.

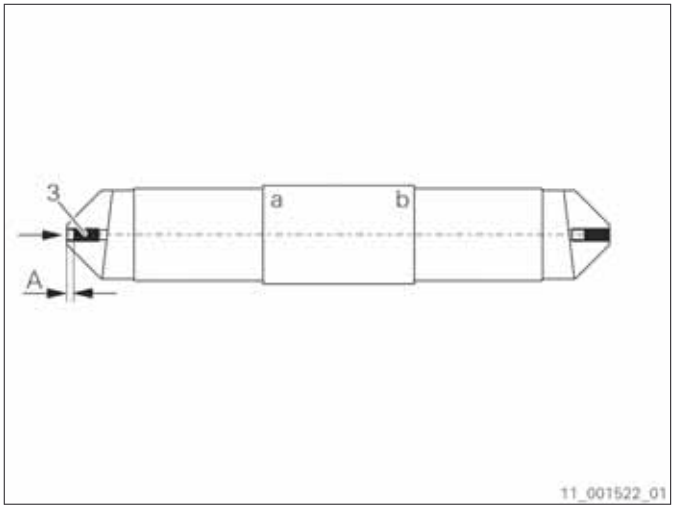

Fig. 200

5. Screw the emergency actuation tool back into the corresponding receiver on the control unit.

6.3.1.3.3 Switching from enginewise rotation shift position to counter-rotation shift position

This switchover process is only possible on reverse transmissions.

⚠ CAUTION

Risk of burn injuries due to contact with hot surfaces.
Slight or moderate injury possible.
⇨ Wear protective gloves.

1. Set the engine speed adjustment to idling speed and wait until the ship speed has dropped to such an extent that the engine is not switched off during the switchover process.

2. Unscrew the headless screws (2, 3) of both solenoid valves (a) and (b) as far as they will go using the emergency actuation tool.

   → The headless screws (2, 3) have been unscrewed and protrude approx. 0.2-0.3 mm from the plane surface.

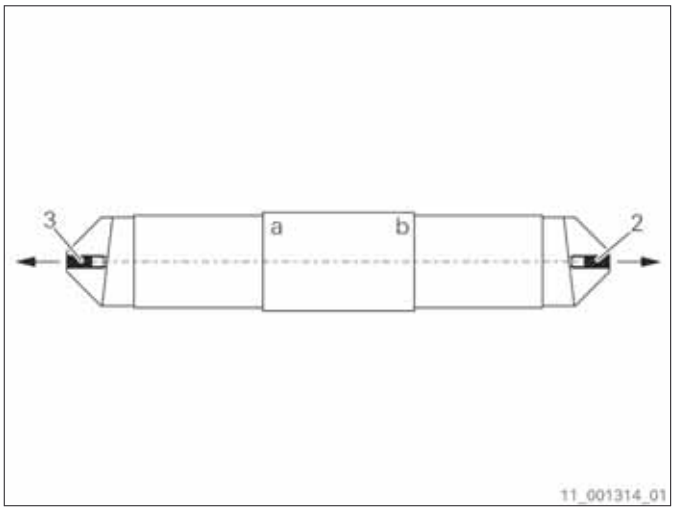

Fig. 201

3. Screw in the headless screw (2) of the solenoid valve (b) to approx. 6.0-6.2 mm as far as it will go using the emergency actuation tool.

4. Check correct direction of motion.

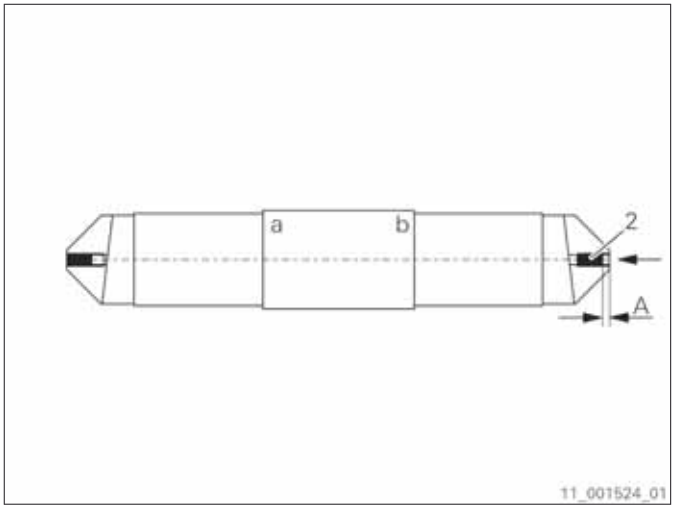

Fig. 202

5. Screw the emergency actuation tool back into the corresponding receiver on the control unit.

6.3.1.3.4 Switching off the mechanical emergency actuation

⚠ CAUTION

Risk of burn injuries due to contact with hot surfaces.
Slight or moderate injury possible.
⇨ Wear protective gloves.

1. Set the engine speed adjustment to idling speed.

2. Unscrew the headless screws (2, 3) of both solenoid valves (a) and (b) as far as they will go using the emergency actuation tool.

   → The headless screws (2, 3) have been unscrewed and protrude approx. 0.2-0.3 mm from the plane surface.

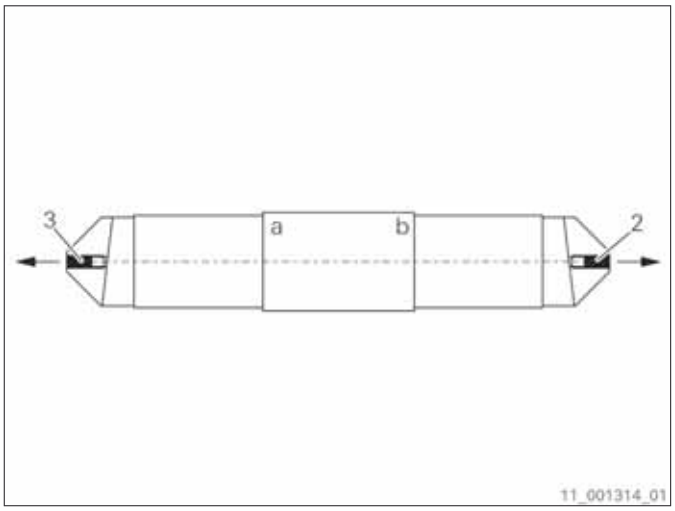

Fig. 203

3. Screw the emergency actuation tool back into the corresponding receiver on the control unit.

4. Move the drive lever into the neutral shift position.

5. Switch on the main drive's electric transmission actuation:
   - Switch on the transmission actuation.
   - Connect the solenoid valve plugs.

6. Switch on the electric actuation of the shaft brake:
   - Switch on the shaft brake actuation.
   - Connect the electric actuation unit plug.

7. Check the actuation of all shift positions on the drive lever.

6.3.2 Electric actuation unit of the main drive of ZF 3300 NR (counter-rotation) family

6.3.2.1 Elements of the electric actuation unit

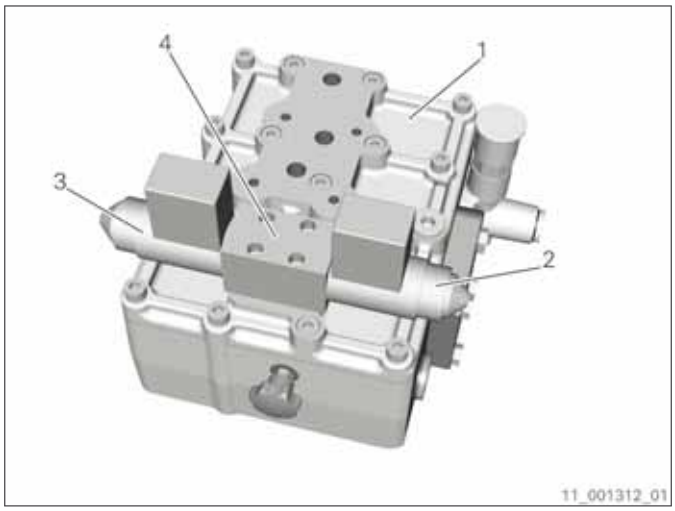

Fig. 204

1 Control unit
2 Solenoid valve (b) for the counter-rotation shift position
3 Solenoid valve (a) for the neutral shift position
4 Pilot valve for the counter-rotation and neutral shift positions

The solenoid valve (3) facing the output is responsible for the neutral shift position.

The solenoid valve (2) opposite of the output is responsible for an output rotation direction that is opposite to the direction of drive rotation.

⚠ DANGER

Risk of injury due to rotating parts.
Death or serious injury probable.
⇨ Install propshaft brake or propshaft lock.

The transmission clutch is open in the neutral shift position. The propeller shaft, however, continues to turn. If a standing propeller shaft is necessary, provide a propeller shaft brake or another type of propeller shaft lock.

⚠ WARNING

Risk of accident due to a non-functioning control element.
Death or serious injury possible.
⇨ Adapt driving method when on open waters.
⇨ Do not drive in tight and heavily-frequented waters.
⇨ Allow the ship to be towed.

In case of power failure, the current shift position of the transmission remains in place.

6.3.2.2 Mechanical emergency actuation

In the event of malfunctions in the actuation unit, the transmission can be mechanically actuated by hand with the aid of a headless screw. In doing so, the control piston is moved axially.

⚠ WARNING

Risk of accident due to insufficient access to the emergency actuation tool.
Death or serious injury possible.
⇨ Ensure free access.

⚠ WARNING

Risk of accident due to insufficient clearance around the mechanical emergency actuation.
Death or serious injury possible.
⇨ Ensure clearance of at least 20 cm.

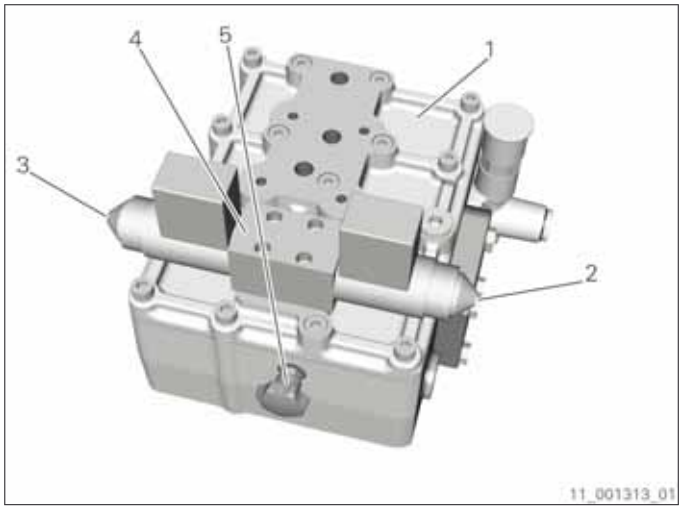

Fig. 205

1 Control unit
2 Headless screw of solenoid valve (b)
3 Headless screw of solenoid valve (a)
4 Pilot valve for the counter-rotation and neutral shift positions
5 Hexagon socket wrench for the mechanical emergency actuation

The mechanical emergency actuation of the solenoid valves (2, 3) is activated by hand using a headless screw. The headless screw is positioned on the solenoid valve's front. A hexagon socket wrench (5) with a width across flats of 3 mm, which can be used to actuate the headless screw, is attached to the control unit.

There are two positions for the headless screw that are noticeable upon reaching a stop. An intermediate position is not permissible.

The two positions are defined as follows

- The headless screw has been unscrewed and protrudes approx. 0.2-0.3 mm from the plane surface.
- The headless screw has been screwed in to approx. 6.0-6.2 mm below the plane surface.

6.3.2.2.1 Neutral shift position

The headless screw (3) of the solenoid valve (a) has been screwed in to a distance A of approx. 6.0-6.2 mm below the plane surface.

The headless screw (2) of the solenoid valve (b) has been unscrewed and protrudes approx. 0.2-0.3 mm from the plane surface.

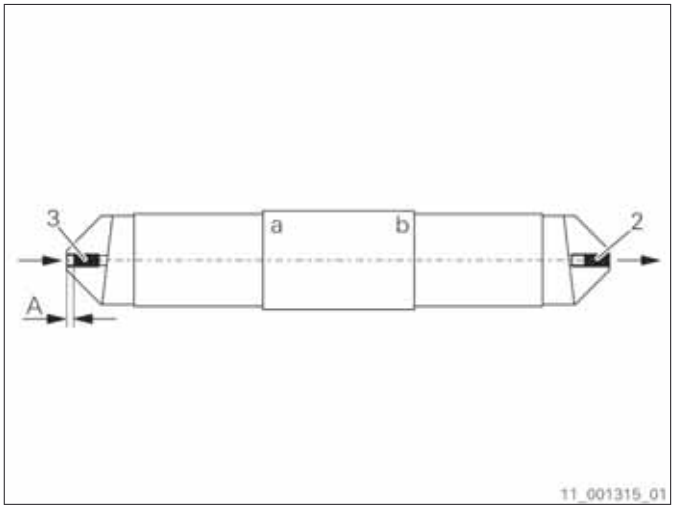

Fig. 206

6.3.2.2.2 Counter-rotation shift position

The headless screw (3) of the solenoid valve (a) has been unscrewed and protrudes approx. 0.2-0.3 mm from the plane surface.

The headless screw (2) of the solenoid valve (b) has been screwed in to a distance A of approx. 6.0-6.2 mm below the plane surface.

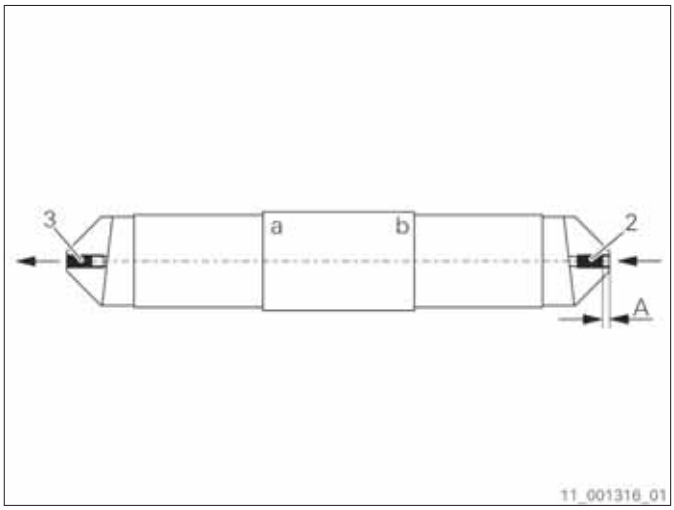

Fig. 207

6.3.2.3 Operation with mechanical emergency actuation

⚠ WARNING

Risk of accident due to a non-functioning control element.
Death or serious injury possible.

- ⇨ Adapt driving method when on open waters.
- ⇨ Do not drive in tight and heavily-frequented waters.
- ⇨ Allow the ship to be towed.

The clutch set by the mechanical emergency actuation is always closed while the engine is running. The transmission that is mechanically actuated as an emergency cannot be shifted into the neutral shift position or, in the event of reverse transmissions, reversed using the drive lever.

6.3.2.3.1 Switching on the mechanical emergency actuation

Prior to commencing travel, ensure that the emergency actuation tool is available on the control unit.

⚠ CAUTION

Risk of burn injuries due to contact with hot surfaces.
Slight or moderate injury possible.
⇨ Wear protective gloves.

1. Switch off the main drive's electric transmission actuation:
   - Switch off the transmission actuation.
   - Remove the plugs from the solenoid valves.

2. Switch off the electric actuation of the shaft brake:
   - Switch off the shaft brake actuation.
   - Remove the electric actuation unit plug.

3. Set the engine speed adjustment to idling speed.

4. **⚠ WARNING**

   Risk of accident due to incorrect direction of motion.
   Death or serious injury possible.
   ⇨ Ensure correct direction of motion.

   Screw in the headless screw (2) of the solenoid valve (b) to approx. 6.0-6.2 mm as far as it will go using the emergency actuation tool.

5. Check correct direction of motion.

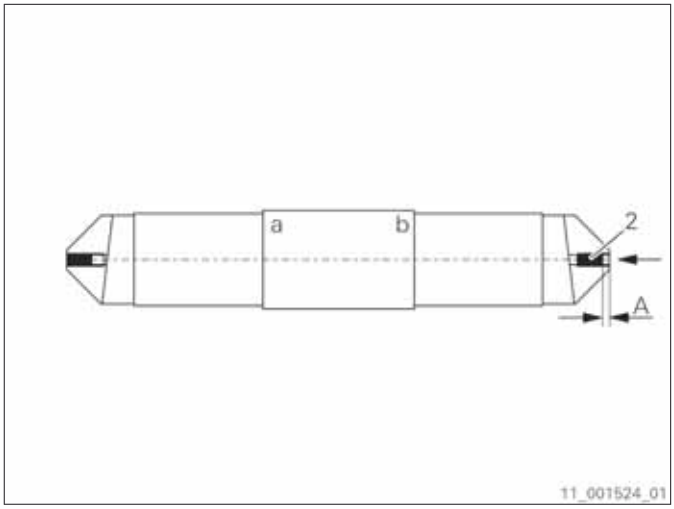

Fig. 208

6. Screw the emergency actuation tool back into the corresponding receiver on the control unit.

6.3.2.3.2 Switching off the mechanical emergency actuation

⚠ CAUTION

Risk of burn injuries due to contact with hot surfaces.
Slight or moderate injury possible.
⇨ Wear protective gloves.

1. Set the engine speed adjustment to idling speed.

2. Unscrew the headless screws (2, 3) of both solenoid valves (a) and (b) as far as they will go using the emergency actuation tool.

   → The headless screws (2, 3) have been unscrewed and protrude approx. 0.2-0.3 mm from the plane surface.

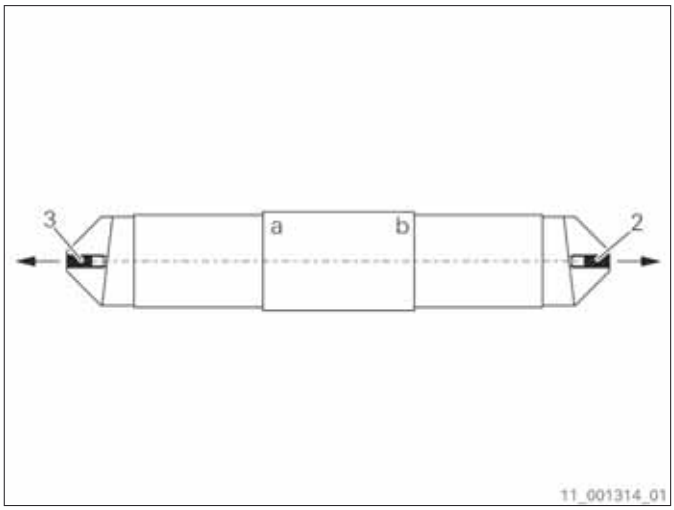

Fig. 209

3. Screw the emergency actuation tool back into the corresponding receiver on the control unit.

4. Move the drive lever into the neutral shift position.

5. Switch on the main drive's electric transmission actuation:
   - Switch on the transmission actuation.
   - Connect the solenoid valve plugs.

6. Switch on the electric actuation of the shaft brake:
   - Switch on the shaft brake actuation.
   - Connect the electric actuation unit plug.

7. Check the actuation of all shift positions on the drive lever.

6.3.3 Electric actuation unit of the main drive of ZF 3300 NR (enginewise rotation) family

6.3.3.1 Elements of the electric actuation unit

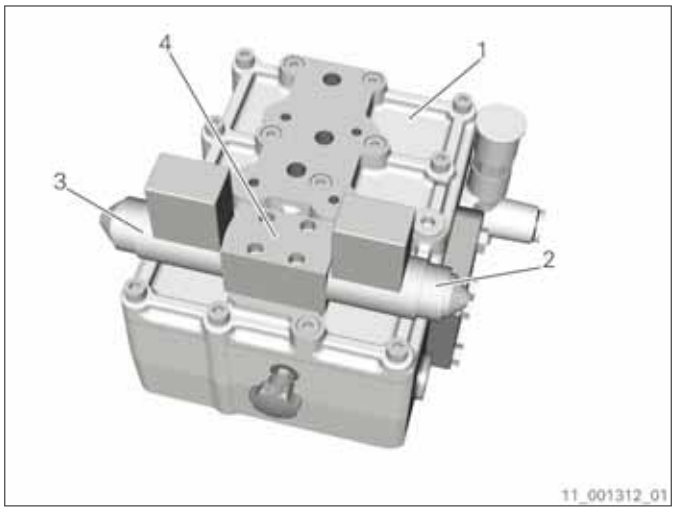

Fig. 210

1 Control unit
2 Solenoid valve (b) for the neutral shift position
3 Solenoid valve (a) for the enginewise rotation shift position
4 Pilot valve for the enginewise rotation and neutral shift positions

The solenoid valve (3) facing the output is responsible for an output rotation direction that is the same as the direction of drive rotation.

The solenoid valve (2) opposite of the output is responsible for the neutral shift position.

⚠ DANGER

Risk of injury due to rotating parts.
Death or serious injury probable.
⇨ Install propshaft brake or propshaft lock.

The transmission clutch is open in the neutral shift position. The propeller shaft, however, continues to turn. If a standing propeller shaft is necessary, provide a propeller shaft brake or another type of propeller shaft lock.

⚠ WARNING

Risk of accident due to a non-functioning control element.
Death or serious injury possible.
⇨ Adapt driving method when on open waters.
⇨ Do not drive in tight and heavily-frequented waters.
⇨ Allow the ship to be towed.

In case of power failure, the current shift position of the transmission remains in place.

6.3.3.2 Mechanical emergency actuation

In the event of malfunctions in the actuation unit, the transmission can be mechanically actuated by hand with the aid of a headless screw. In doing so, the control piston is axially moved.

⚠ WARNING

Risk of accident due to insufficient access to the emergency actuation tool.
Death or serious injury possible.
⇨ Ensure free access.

⚠ WARNING

Risk of accident due to insufficient clearance around the mechanical emergency actuation.
Death or serious injury possible.
⇨ Ensure clearance of at least 20 cm.

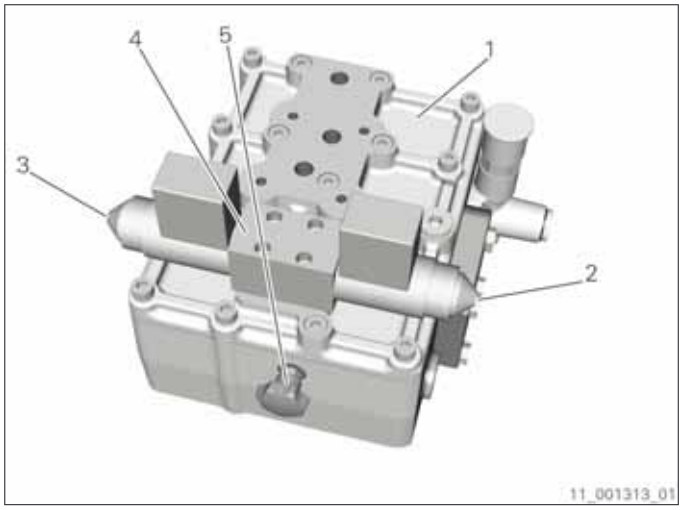

Fig. 211

1 Control unit
2 Headless screw of solenoid valve (b)
3 Headless screw of solenoid valve (a)
4 Pilot valve for the enginewise rotation and neutral shift positions
5 Hexagon socket wrench for the mechanical emergency actuation

The mechanical emergency actuation of the solenoid valves (2, 3) is manually activated using a headless screw. The headless screw is positioned on the solenoid valve's front. A hexagon socket wrench (5) with a width across flats of 3 mm, which can be used to actuate the headless screw, is attached to the control unit.

There are two positions for the headless screw that are noticeable upon reaching a stop. An intermediate position is not permissible.

The two positions are defined as follows

- The headless screw has been unscrewed and protrudes approx. 0.2-0.3 mm from the plane surface.
- The headless screw has been screwed in to approx. 6.0-6.2 mm below the plane surface.

6.3.3.2.1 Neutral shift position

The headless screw (3) of the solenoid valve (a) has been unscrewed and protrudes approx. 0.2-0.3 mm from the plane surface.

The headless screw (2) of the solenoid valve (b) has been screwed in to a distance A of approx. 6.0-6.2 mm below the plane surface.

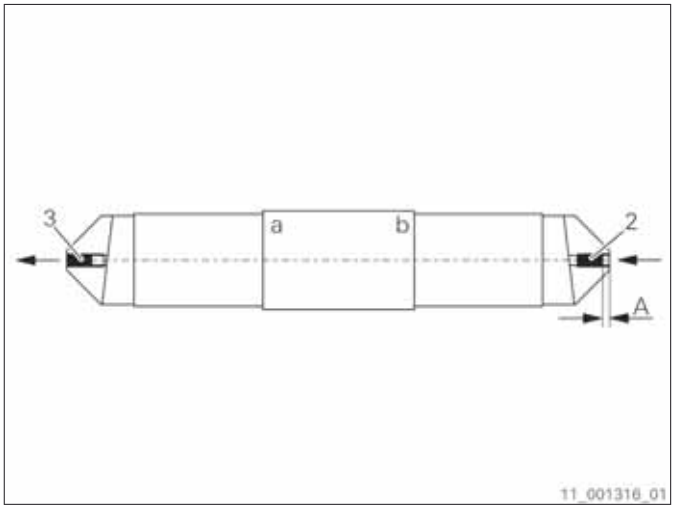

Fig. 212

6.3.3.2.2 Enginewise rotation shift position

The headless screw (3) of the solenoid valve (a) has been screwed in to a distance A of approx. 6.0-6.2 mm below the plane surface.

The headless screw (2) of the solenoid valve (b) has been unscrewed and protrudes approx. 0.2-0.3 mm from the plane surface.

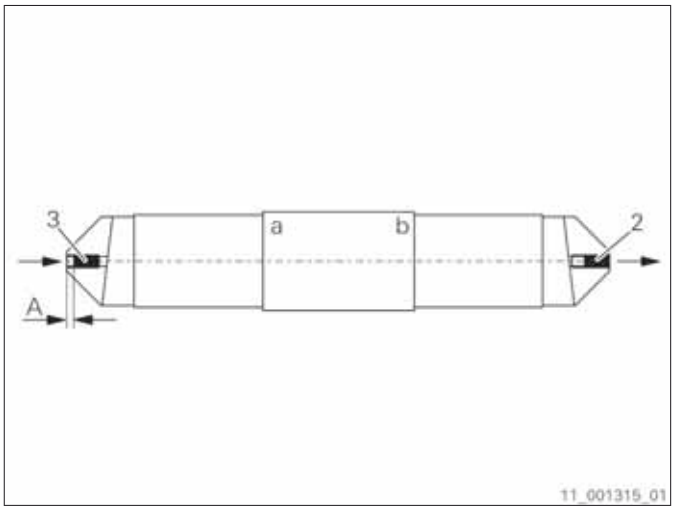

Fig. 213

6.3.3.3 Operation with mechanical emergency actuation

⚠ WARNING

Risk of accident due to a non-functioning control element.
Death or serious injury possible.

- ⇨ Adapt driving method when on open waters.
- ⇨ Do not drive in tight and heavily-frequented waters.
- ⇨ Allow the ship to be towed.

The clutch set by the mechanical emergency actuation is always closed while the engine is running. The transmission that is mechanically actuated as an emergency cannot be shifted into the neutral shift position or, in the event of reverse transmissions, reversed using the drive lever.

6.3.3.3.1 Switching on the mechanical emergency actuation

Prior to commencing travel, ensure that the emergency actuation tool is available on the control unit.

⚠ CAUTION

Risk of burn injuries due to contact with hot surfaces.
Slight or moderate injury possible.
⇨ Wear protective gloves.

1. Switch off the main drive's electric transmission actuation:
   - Switch off the transmission actuation.
   - Remove the plugs from the solenoid valves.

2. Switch off the electric actuation of the shaft brake:
   - Switch off the shaft brake actuation.
   - Remove the electric actuation unit plug.

3. Set the engine speed adjustment to idling speed.

4. **⚠ WARNING**

   Risk of accident due to incorrect direction of motion.
   Death or serious injury possible.
   ⇨ Ensure correct direction of motion.

   Screw in the headless screw (3) of the solenoid valve (a) to approx. 6.0-6.2 mm as far as it will go using the emergency actuation tool.

5. Check correct direction of motion.

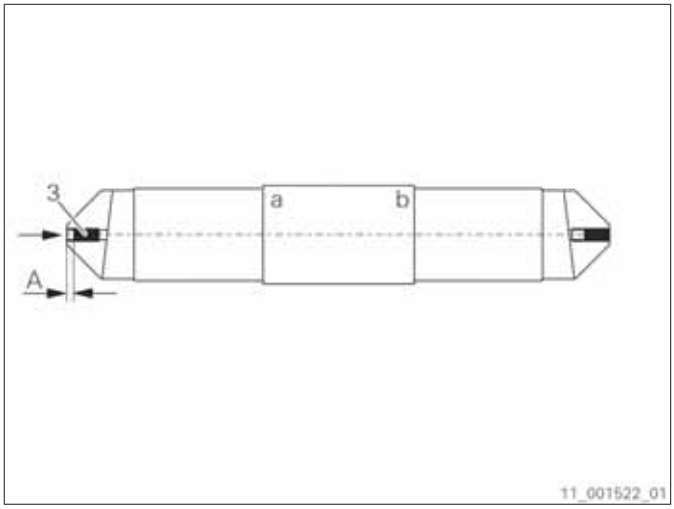

Fig. 214

6. Screw the emergency actuation tool back into the corresponding receiver on the control unit.

6.3.3.3.2 Switching off the mechanical emergency actuation

⚠ CAUTION

Risk of burn injuries due to contact with hot surfaces.
Slight or moderate injury possible.
⇨ Wear protective gloves.

1. Set the engine speed adjustment to idling speed.

2. Unscrew the headless screws (2, 3) of both solenoid valves (a) and (b) as far as they will go using the emergency actuation tool.

   → The headless screws (2, 3) have been unscrewed and protrude approx. 0.2-0.3 mm from the plane surface.

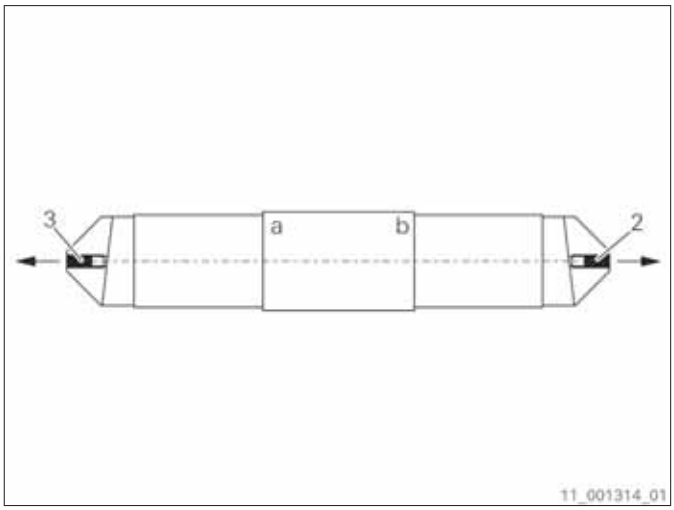

Fig. 215

3. Screw the emergency actuation tool back into the corresponding receiver on the control unit.

4. Move the drive lever into the neutral shift position.

5. Switch on the main drive's electric transmission actuation:
   - Switch on the transmission actuation.
   - Connect the solenoid valve plugs.

6. Switch on the electric actuation of the shaft brake:
   - Switch on the shaft brake actuation.
   - Connect the electric actuation unit plug.

7. Check the actuation of all shift positions on the drive lever.

6.3.4 Electric actuation unit of the shaft brake

6.3.4.1 Elements of the electric actuation unit

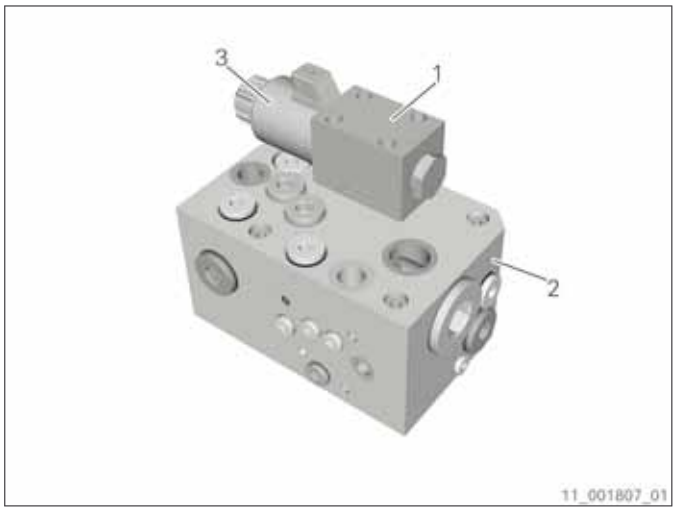

1 Pilot valve
2 Valve block
3 Solenoid for clutch closed shift position

Fig. 216

In case of power failure, the shaft brake opens.

6.4 Shifting process

During operation, the transmission does not require any further monitoring except for the display equipment as listed below:

- Display equipment for oil temperature
- Display equipment for oil pressures

Based on ZF Friedrichshafen AG's experience, the shift sequences described in the following result in efficient shifting characteristics. ZF Friedrichshafen AG recommends observing the suggested shift sequences.

The shifting movement from the neutral shift position into the forward or reverse shift position and vice verse must take place quickly. Stopping in undefined areas between the shift positions is not permissible.

6.4.1 Shifting process when driving with the main drive

6.4.1.1 Switching from neutral shift position into forward or reverse shift position

1. Set the engine speed adjustment to idling speed.

2. Switch on the desired direction of motion and stay in this position for approx. 1-2 s.

3. Increase engine speed to the desired operating speed.

6.4.1.2 Switching from forward shift position into reverse shift position

This switchover process is only possible on reverse transmissions.

1. Set the engine speed adjustment to idling speed and wait until the ship speed has dropped to such an extent that the engine is not switched off during the switchover process.
2. Maintain the shift position in order to use the braking effect on the propeller at idling speed.
3. Move drive lever into neutral shift position and stay in this position for approx. 0.5 s.
4. Move drive lever further into reverse shift position and stay in this position for approx. 1-2 s.
5. Increase engine speed to the desired operating speed.

6.4.1.3 Switching from reverse shift position into forward shift position

This switchover process is only possible on reverse transmissions.

1. Set the engine speed adjustment to idling speed and wait until the ship speed has dropped to such an extent that the engine is not switched off during the switchover process.
2. Maintain the shift position in order to use the braking effect on the propeller at idling speed.
3. Move drive lever into neutral shift position and stay in this position for approx. 0.5 s.
4. Move drive lever further into forward shift position and stay in this position for approx. 1-2 s.
5. Increase engine speed to the desired operating speed.

6.4.1.4 Crash stop maneuver

In the event of an emergency situation , it is even possible to switch from the forward shift position to the reverse shift position at a higher engine speed amounting to 20% above idle speed; however, this may not be any higher than max. 720 rpm.

ZF Friedrichshafen AG recommends using the engine brake effect before switching to the reverse shift position. Increase the engine speed to the desired operating speed only approx. 1-2 s after switching to the reverse shift position. With crash stop maneuvers, note that in many cases and depending on the ship type amongst other things, no or only a minor shortening of the stopping distance is achieved compared to the forward shift position into reverse shift position shifting sequence as described above.

The crash stop maneuvers place an extreme load on the entire drive system. The reverse clutch of the reverse transmission is exposed to extreme load.

If the crash stop maneuvers are performed during the initial testing of the ship, schedule an interval of at least half an hour between the crash stop maneuvers. As a result, the clutch components that are subjected to extreme thermal load during the crash stop maneuver can cool back down to normal temperature.

ZF Friedrichshafen AG recommends not performing more than between one and five crash stop maneuvers for test purposes.

6.4.2 Shifting process when driving with the power take-in

The following shifting processes are only described for shifting processes when using an electric motor.

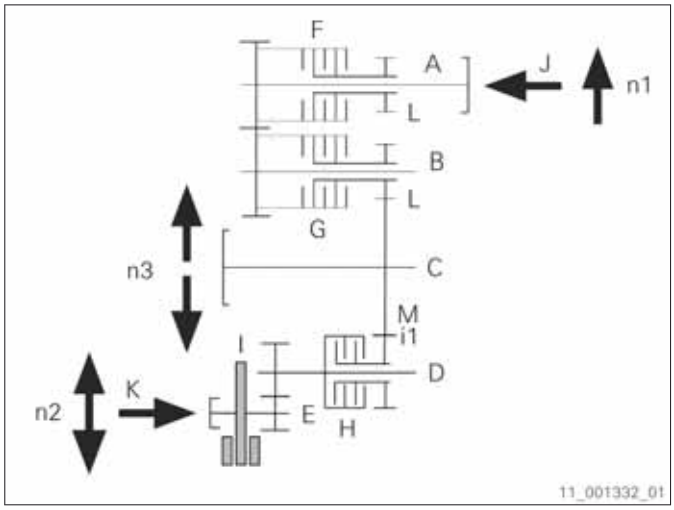

A Input shaft
B Intermediate shaft
C Output shaft
D Power take-in's clutch shaft
E Power take-in shaft
F Clutch for counter-rotation output rotation direction
G Clutch for enginewise rotation output rotation direction
H Clutch for power take-in
I Power take-in brake (optional)
J main drive
K Power take-in
L Pinions, both pinions are meshing
M Output gear
i1 Main drive ratio
n1 Main drive speed
n2 Power take-in speed
n3 Output speed

Fig. 217

6.4.2.1 Setting off from standstill in driving with main drive operating mode

Requirements:

- Electric transmission actuation and mechanical emergency actuation of the main drive are in neutral shift position.
- Electric transmission actuation and mechanical emergency actuation of the power take-in are in clutch open shift position.

1. Switch on main drive's diesel engine and let it warm up.
2. Bring main drive to idle speed after warm-up.
3. Switch on the desired direction of motion and stay in this position for approx. 2 s.
4. Increase engine speed to the desired operating speed.
5. Drive with the main drive *(refer to section Shifting process when driving with the main drive, page 269)*.

6.4.2.2 Switching from driving with main drive operating mode to standstill

1. Bring main drive to engine speed desired for disengaging the clutch.

2. Move drive lever into neutral shift position.

6.4.2.3 Setting off from standstill in driving with power take-in operating mode

Requirements:
- Electric transmission actuation and mechanical emergency actuation of the main drive are in neutral shift position.
- Electric transmission actuation and mechanical emergency actuation of the power take-in are in clutch open shift position.

1. Switch on power take-in's oil pump and wait until the power take-in clutch oil pressure has been reached.

2. Switch on power take-in's cooling water pump.

3. Open power take-in brake and wait until brake has been opened.

4. Switch on electric motor of power take-in.

5. The speed differential is the difference between the speed on the primary side and on the secondary side of the clutch.

   Bring the electric motor to a speed differential at the power take-in clutch of maximally 50 rpm.

   Only set higher speed differential if this higher speed differential has been approved by ZF Friedrichshafen AG.

6. Close the power take-in clutch and wait until the clutch has been closed.

7. Bring electric motor to desired operating speed. In doing so, do not exceed the input torque permissible for the operating mode.

6.4.2.4 Switching from driving with power take-in operating mode to standstill

1. Bring electric motor to the speed desired for disengaging the clutch.

2. Open power take-in clutch and wait until clutch has been opened.

3. Only perform this work step if the power take-in brake should be closed.

   Bring electric motor to a speed of maximally 50 rpm.

4. Switch off electric motor and wait until the electric motor has been switched off.

5. Only perform this work step if the power take-in brake should be closed.

   Close the power take-in brake and wait until the brake has been closed.

6. Switch off power take-in's cooling water pump.

7. Switch off power take-in's oil pump.

6.4.2.5 Switching from driving with main drive operating mode to driving with power take-in operating mode

1. Bring engine speed of main drive and output speed to a speed permissible for the driving with power take-in operating mode.

2. Open main drive clutch and wait until clutch has been opened.

3. Switch on power take-in's oil pump and wait until the power take-in clutch oil pressure has been reached.

4. Switch on power take-in's cooling water pump.

5. Open power take-in brake and wait until brake has been opened.

6. Switch on electric motor of power take-in.

7. The speed differential is the difference between the speed on the primary side and on the secondary side of the clutch.

   Bring the electric motor to a speed differential at the power take-in clutch of maximally 50 rpm.

   Only set higher speed differential if this higher speed differential has been approved by ZF Friedrichshafen AG.

8. Close the power take-in clutch and wait until the clutch has been closed.

9. Bring electric motor to desired operating speed. In doing so, do not exceed the input torque permissible for the operating mode.

6.4.2.6 Switching from driving with power take-in operating mode to driving with main drive operating mode

1. Switch on main drive's diesel engine and let it warm up.

2. Bring main drive to idle speed after warm-up.

3. Open power take-in clutch and wait until clutch has been opened.

4. Switch off power take-in's cooling water pump.

5. Switch off power take-in's oil pump.

6. Only perform this work step if the power take-in brake should be closed.

   Bring electric motor to a speed of maximally 50 rpm.

7. Switch off electric motor and wait until the electric motor has been switched off.

8. Only perform this work step if the power take-in brake should be closed.

   Close the power take-in brake and wait until the brake has been closed.

9. Set main drive speed (n1) as follows:
   - Case 1
     If output speed (n3) • main transmission ratio (i1) ≤ idle speed
     Main drive speed (n1) = idle speed, tolerance: ±150 rpm
   - Case 2
     If output speed (n3) • main transmission ratio (i1) > idle speed
     Main drive speed (n1) = output speed (n3) • main transmission ratio (i1), tolerance: ±150 rpm

10. Close main drive clutch of already available direction of travel and wait 2 s.

11. Increase main drive engine speed to the desired operating speed.

12. Drive with the main drive *(refer to section Shifting process when driving with the main drive, page 269)*.

6.4.2.7 Switching from driving with main drive operating mode to boost operating mode

1. Bring main drive engine speed to a speed permissible for boost operating mode.

2. Switch on power take-in's oil pump and wait until the power take-in clutch oil pressure has been reached.

3. Open power take-in brake and wait until brake has been opened.

4. Switch on electric motor of power take-in.

5. The speed differential is the difference between the speed on the primary side and on the secondary side of the clutch.

   Bring the electric motor to a speed differential at the power take-in clutch of maximally 50 rpm.

Only set higher speed differential if this higher speed differential has been approved by ZF Friedrichshafen AG.

6. Close the power take-in clutch and wait until the clutch has been closed.

7. Bring electric motor to desired operating speed. In doing so, do not exceed the input torque permissible for the operating mode.

8. Increase main drive engine speed to the desired operating speed. In doing so, do not exceed the speed range permissible for boost mode.

6.4.2.8 Switching from boost operating mode to driving with main drive operating mode

1. Bring main drive engine speed to a speed permissible for driving with the main drive operating mode.

2. Switch electric motor to a state in which it transmits no power.

3. Open power take-in clutch and wait until clutch has been opened.

4. Switch off power take-in's oil pump.

5. Only perform this work step if the power take-in brake should be closed.

   Bring electric motor to a speed of maximally 50 rpm.

6. Switch off electric motor and wait until the electric motor has been switched off.

7. Only perform this work step if the power take-in brake should be closed.

   Close power take-in brake and wait until the brake has been closed.

8. Increase main drive engine speed to the desired operating speed.

9. Drive with the main drive *(refer to section Shifting process when driving with the main drive, page 269)*.

6.4.2.9 Switching from driving with power take-in operating mode to boost operating mode

1. Switch on main drive's diesel engine and let it warm up.

2. Bring main drive to idle speed after warm-up.

3. Switch off power take-in's cooling water pump.

4. Bring the power take-in speed and output speed to a speed permissible for boost operating mode.

5. Set main drive speed (n1) as follows:
   - Case1
     If output speed (n3) • main transmission ratio (i1) ≤ idle speed
     Main drive speed (n1) = idle speed, tolerance: ±150 rpm
   - Case2
     If output speed (n3) • main transmission ratio (i1) > idle speed
     Main drive speed (n1) = output speed (n3) • main transmission ratio (i1), tolerance: ±150 rpm

6. Close main drive clutch of already available direction of travel and wait 2 s.

7. Bring electric motor to desired operating speed. In doing so, do not exceed the input torque permissible for the operating mode.

8. Increase main drive engine speed to the desired operating speed. In doing so, do not exceed the speed range permissible for boost mode.

6.4.2.10 Switching from boost operating mode to driving with power take-in operating mode

1. Bring engine speed of main drive and output speed to a speed permissible for the driving with power take-in operating mode.

2. Open main drive clutch and wait until clutch has been opened.

3. Bring main drive engine speed to idle speed.

4. Switch on power take-in's cooling water pump.

5. Bring electric motor to desired operating speed. In doing so, do not exceed the input torque permissible for the operating mode.

6.4.2.11 Switching from driving with main drive operating mode to generator operating mode

1. Bring main drive engine speed to a speed permissible for generator operating mode.

2. Switch on power take-in's oil pump and wait until the power take-in clutch oil pressure has been reached.

3. Open power take-in brake and wait until brake has been opened.

4. Switch on electric motor of power take-in.

5. The speed differential is the difference between the speed on the primary side and on the secondary side of the clutch.

   Bring the electric motor to a speed differential at the power take-in clutch of maximally 50 rpm.

Only set higher speed differential if this higher speed differential has been approved by ZF Friedrichshafen AG.

6. Close the power take-in clutch and wait until the clutch has been closed.

7. Switch the electric motor from engine operating mode to generator operating mode.

6.4.2.12 Switching from generator operating mode to driving with main drive operating mode

1. Switch on the ship's generating sets and wait until generating sets are ready for operation.

2. Switch off generator operating mode of the electric motor and wait until generator operating mode has been switched off.

3. Open power take-in clutch and wait until clutch has been opened.

4. Only perform this work step if the power take-in brake should be closed.

   Bring electric motor to a speed of maximally 50 rpm.

5. Switch off electric motor and wait until the electric motor has been switched off.

6. Only perform this work step if the power take-in brake should be closed.

   Close power take-in brake and wait until the brake has been closed.

7. Switch off power take-in's oil pump.

6.4.2.13 Switching from generator operating mode to boost operating mode

1. Switch on generating sets and wait until generating sets are ready for operation.

2. Switch off generator operating mode of the electric motor and wait until generator operating mode has been switched off.

3. Open power take-in clutch and wait until clutch has been opened.

4. Only perform this work step if the power take-in brake should be closed.

   Bring electric motor to a speed of maximally 50 rpm.

5. Switch off electric motor and wait until the electric motor has been switched off.

6. Only perform this work step if the power take-in brake should be closed.

   Close power take-in brake and wait until the brake has been closed.

7. Switch off power take-in's oil pump.

8. Bring main drive engine speed to a speed permissible for boost operating mode.

9. Switch on power take-in's oil pump and wait until the power take-in clutch oil pressure has been reached.

10. Open power take-in brake and wait until brake has been opened.

11. Switch on electric motor of power take-in.

12. The speed differential is the difference between the speed on the primary side and on the secondary side of the clutch.

    Bring the electric motor to a speed differential at the power take-in clutch of maximally 50 rpm.

    Only set higher speed differential if this higher speed differential has been approved by ZF Friedrichshafen AG.

13. Close the power take-in clutch and wait until the clutch has been closed.

14. Bring electric motor to desired operating speed. In doing so, do not exceed the input torque permissible for the operating mode.

15. Increase main drive engine speed to the desired operating speed. In doing so, do not exceed the speed range permissible for boost mode.

6.4.2.14 Switching from boost operating mode to generator operating mode

1. Bring main drive engine speed to a speed permissible for driving with the main drive operating mode.

2. Switch electric motor to a state in which it transmits no power.

3. Open power take-in clutch and wait until clutch has been opened.

4. Switch off power take-in's oil pump.

5. Only perform this work step if the power take-in brake should be closed.

   Bring electric motor to a speed of maximally 50 rpm.

6. Switch off electric motor and wait until the electric motor has been switched off.

7. Only perform this work step if the power take-in brake should be closed.

   Close power take-in brake and wait until the brake has been closed.

8. Increase main drive engine speed to the desired operating speed.

9. Drive with the main drive *(refer to section Shifting process when driving with the main drive, page 269)*.

10. Bring main drive engine speed to a speed permissible for generator operating mode.

11. Switch on power take-in's oil pump and wait until the power take-in clutch oil pressure has been reached.

12. Open power take-in brake and wait until brake has been opened.

13. Switch on electric motor of power take-in.

14. The speed differential is the difference between the speed on the primary side and on the secondary side of the clutch.

    Bring the electric motor to a speed differential at the power take-in clutch of maximally 50 rpm.

    Only set higher speed differential if this higher speed differential has been approved by ZF Friedrichshafen AG.

15. Close the power take-in clutch and wait until the clutch has been closed.

16. Switch the electric motor from engine operating mode to generator operating mode.

6.4.2.15 Switching from driving with power take-in operating mode to generator without main drive operating mode

1. Bring electric motor to the speed desired for disengaging the clutch.

2. Open power take-in clutch and wait until clutch has been opened.

3. Only perform this work step if the power take-in brake should be closed.

   Bring electric motor to a speed of maximally 50 rpm.

4. Switch off electric motor and wait until the electric motor has been switched off.

5. Only perform this work step if the power take-in brake should be closed.

   Close power take-in brake and wait until the brake has been closed.

6. Switch off power take-in's cooling water pump.

7. Switch off power take-in's oil pump.

8. Switch on power take-in's oil pump and wait until the power take-in clutch oil pressure has been reached.

9. Switch on power take-in's cooling water pump.

10. Switch on electric motor of power take-in.

11. Only perform this work step if the power take-in brake is closed.

    Open power take-in brake and wait until brake has been opened.

12. The speed differential is the difference between the speed on the primary side and on the secondary side of the clutch.

    Bring the electric motor to a speed differential at the power take-in clutch of maximally 50 rpm.

    Only set higher speed differential if this higher speed differential has been approved by ZF Friedrichshafen AG.

13. Close the power take-in clutch and wait until the clutch has been closed.

14. Switch the electric motor from engine operating mode to generator operating mode.

6.4.2.16 Switching from generator without main drive operating mode to driving with power take-in operating mode

1. Switch on generating sets and wait until generating sets are ready for operation.

2. Switch off generator operating mode of the electric motor and wait until generator operating mode has been switched off.

3. Open power take-in clutch and wait until clutch has been opened.

4. Only perform this work step if the power take-in brake should be closed.

   Bring electric motor to a speed of maximally 50 rpm.

5. Switch off electric motor and wait until the electric motor has been switched off.

6. Only perform this work step if the power take-in brake should be closed.

   Close power take-in brake and wait until the brake has been closed.

7. Switch off power take-in's oil pump.

8. Switch off power take-in's cooling water pump.

9. Switch on power take-in's oil pump and wait until the power take-in clutch oil pressure has been reached.

10. Switch on power take-in's cooling water pump.

11. Open power take-in brake and wait until brake has been opened.

12. Switch on electric motor of power take-in.

13. The speed differential is the difference between the speed on the primary side and on the secondary side of the clutch.

    Bring the electric motor to a speed differential at the power take-in clutch of maximally 50 rpm.

    Only set higher speed differential if this higher speed differential has been approved by ZF Friedrichshafen AG.

14. Close the power take-in clutch and wait until the clutch has been closed.

15. Bring electric motor to desired operating speed. In doing so, do not exceed the input torque permissible for the operating mode.

6.4.3 Shift process when shaft brake is activated

6.4.3.1 Activating the shaft brake during standstill

Requirements:
- Electric transmission actuation and mechanical emergency actuation of the main drive are in neutral shift position.
- Electric actuation of the shaft brake is in the clutch open shift position.
- Engine is switched off.

1. Switch on the shaft brake's oil pump and wait until the system oil pressure of the shaft brake is reached.

2. Activate the shaft brake and wait until it is closed.

6.4.3.2 Activating the shaft brake while driving in operating mode "Driving with main drive"

Requirements:
- Electric transmission actuation and mechanical emergency actuation of the main drive are in neutral shift position.
- Electric actuation of the shaft brake is in the clutch open shift position.

- Observe permissible limit values provided in the project-specific monitoring plan and installation drawing.

1. Activate the shaft brake and wait until it is closed.

6.4.3.3 Crash stop maneuver

When using the shaft brake to facilitate crash stop maneuvers, observe a waiting time of at least 15 minutes between two braking actions.

6.4.4 Shift process when shaft brake is deactivated

6.4.4.1 Deactivating the shaft brake during standstill

Requirements:
- Electric transmission actuation and mechanical emergency actuation of the main drive are in neutral shift position.
- Electric actuation of the shaft brake is in the clutch closed shift position.
- Engine is switched off.

1. Deactivate the shaft brake and wait until it is opened.

2. Switch off oil pump of shaft brake.

3. Switch on main drive's diesel engine and let it warm up.

4. Bring main drive to idle speed after warm-up.

5. Switch on the desired direction of motion and stay in this position for approx. 1-2 s.

6. Increase engine speed to the desired operating speed.

7. Drive with the main drive *(refer to section Shifting process when driving with the main drive, page 269)*.

6.4.4.2 Deactivating the shaft brake while driving in operating mode "Driving with main drive"

Requirements:
- Electric transmission actuation and mechanical emergency actuation of the main drive are in neutral shift position.
- Electric actuation of the shaft brake is in the clutch closed shift position.

1. Deactivate the shaft brake and wait until it is opened.

2. Set the engine speed adjustment to idling speed.

3. Switch on the desired direction of motion and stay in this position for approx. 1-2 s.

4. Increase engine speed to the desired operating speed.

5. Drive with the main drive *(refer to section Shifting process when driving with the main drive, page 269)*.

6.5 Trailing operation

Operation with a stationary engine and a propeller driven by the current is described as trailing operation . Occasional or regular trailing operation is possible according to the transmission design.

The transmission actuation must be in the neutral shift position during trailing operation with a stationary engine and a rotating propshaft.

6.5.1 Occasional trailing operation

When dealing with the transmission basic design without a trailing pump, an occasional trailing operation of less than five hours is permissible.

Monitor the oil temperature at the measuring point (11) located in the oil sump *(refer to section Transmission monitoring, page 91)*. The maximum oil sump temperature may not exceed 75°C. Reduce the ship speed if the oil sump temperature exceeds this limit value. Alternatively, the engine can be briefly put into operation until the oil temperature has dropped below the maximum permissible value as a result of the cooling water circulation. In doing so, the transmission must be in the forward or neutral shift position.

In emergency situations, the trailing operation without a trailing pump is permissible for up to 25 hours.

6.5.2 Regular trailing operation

Regular trailing operation or trailing operation that lasts more than five hours without interruption is only permissible with a trailing pump.

With a stationary engine and a rotating output shaft, the trailing pump assumes the transmission lubricating oil supply. As a result, a temporally unrestricted operation with a stationary engine and a rotating propeller is possible.

Monitor the oil temperature at the measuring point (11) located in the oil sump *(refer to section Transmission monitoring, page 91)*. The maximum oil sump temperature may not exceed 95°C. The oil sump temperature corresponds to the multidisk temperature. In the event of an excessively high oil sump temperature, reduce either the ship speed or feed the cooling water through the transmission oil cooler.

The cooling water volume can either be taken from a special valve belonging to the engine systems in operation or can be conveyed through a separately driven water pump. A cooling water volume that

corresponds to a maximum of approx. 25% of the water volume during normal operation can be assumed during the design phase.

In the event of an oil sump temperature above 90°C, the transmission must remain in the neutral shift position following engine start until the oil sump temperature drops below 90°C. Normal operation is permissible afterwards.

6.6 Operation with the emergency control (Come home screws)

If, despite the mechanical emergency actuation, no transmission of power takes place, there is a malfunction in the transmission. In such cases, the clutch disks belonging to the shift clutch might be mechanically pushed together with the clamping screws installed in the transmission.

Three clamping screws are available respectively for the multidisk clutches and are accessible from the outside via the transmission output side.

Accessing the input shaft's clamping screws is not possible for the V version.

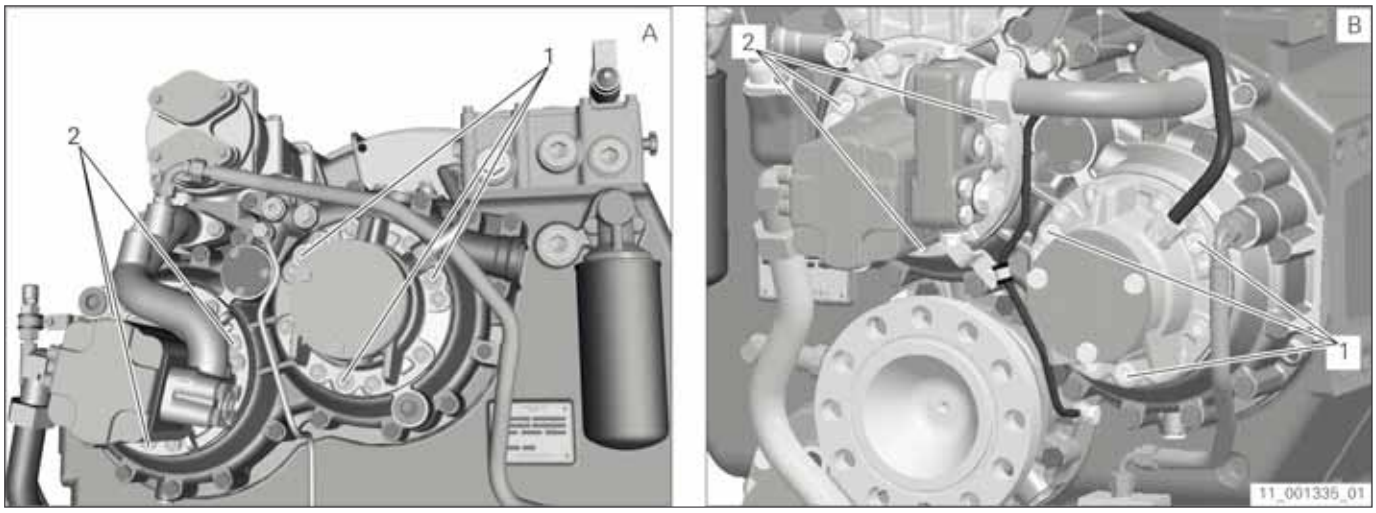

Fig. 218

A ZF 3000 family, ZF 3300 family, ZF 3700 family
1 Position of clamping screws belonging to the counter-rotation emergency control

B ZF 3000 D family
2 Position of clamping screws belonging to the enginewise rotation emergency control

Operation with the emergency control is permissible if:

- The oil pressure at the measuring point (2) is at least >4.0 bar when the engine runs at idle speed and the transmission is at operating temperature. In this case, operation with 50% of the maximum engine speed is permissible.
- There is no oil pressure at measuring point (2) and a sufficient oil quantity is available in the transmission. In this case, operation with a maximum of 10% above the engine idle speed is permissible.

  The oil quantity is sufficient if the oil level lies between the top and bottom measuring mark of the oil dipstick.

Only one shift clutch may be connected to each drive at the same time as both output directions of rotation are otherwise force-fit and the transmission is jammed.

The clutch set by the emergency control is always closed while the engine is running. The transmission that is engaged as an emergency cannot be shifted into the neutral shift position or, in the event of reverse transmissions, reversed using the drive lever.

6.6.1 Activating the emergency control

Requirements:

- Engine is switched off.
- The pilot valve actuation has been taken out of operation. With the electric transmission actuation, the pilot valve is deactivated by removing the plugs. With the mechanical transmission actuation, the pilot valve is deactivated by unhitching the pull-push cable.
- The mechanical emergency actuation is in the neutral shift position.

1. Secure the engine so that it cannot be started during the activation of the emergency control.

2. Remove the screw plugs from the cover of the clutch that is to be engaged *(refer to fig. 218, page 284)*

3. Insert the WAF 10 hexagon socket wrench *(refer to section Tools for the emergency control of the transmission, page 306)* into one of the three openings as far as it will go. Turn the engine or the input shaft until the clamping screw touches the hexagon socket wrench.

   The engine or input shaft can be turned in any direction. After a rotation of maximum 120°, the clamping screw must touch the hexagon socket wrench.

4. Pull out the hexagon socket wrench approx. 30 mm from the opening. Continue turning the engine or input shaft by approx. 1°.

5. Insert the hexagon socket wrench into the clamping screw.

6. **NOTICE**

   Property damage caused by incomplete torque transmission possible.

   ⇨ Screw in the clamping screws equally.

   ⇨ Do not tilt the clutch piston.

   Screw in the clamping screw through multiple rotations in a clockwise direction with the WAF 10 hexagon socket wrench as far as it will go.

   Repeat this work step at the two other clamping screws.

7. In a second round, tighten all three clamping screws with a WAF 10 hexagon socket wrench. Tightening torque: 35 Nm

8. Screw in the screw plugs into the openings and tighten.

Tightening torque: 30 Nm

9. Start the engine and check the conditions for operation with the emergency control *(refer to section Operation with the emergency control (Come home screws), page 284)*.

10. Drive to the nearest service center under the permissible conditions.

6.6.2 Deactivating the emergency control

Requirements:
- Engine is switched off.
- The pilot valve actuation has been taken out of operation. With the electric transmission actuation, the pilot valve is deactivated by removing the plugs. With the mechanical transmission actuation, the pilot valve is deactivated by unhitching the pull-push cable.
- The mechanical emergency actuation is in the neutral shift position.

1. Secure the engine so that it cannot be started during the deactivation of the emergency control.

2. Remove the screw plugs from the cover of the clutch that is to be engaged *(refer to fig. 218, page 284)*

3. Insert the WAF 10 hexagon socket wrench *(refer to section Tools for the emergency control of the transmission, page 306)* into one of the three openings as far as it will go. Turn the engine or the input shaft until the clamping screw touches the hexagon socket wrench.

   The engine or input shaft can be turned in any direction. After a rotation of maximum 120°, the clamping screw must touch the hexagon socket wrench.

4. Pull out the hexagon socket wrench approx. 30 mm from the opening. Continue turning the engine or input shaft by approx. 1°.

5. Insert the hexagon socket wrench into the clamping screw.

6. **NOTICE**

   Property damage caused by incomplete torque interruption possible.
   ⇨ Unscrew the clamping screws equally.
   ⇨ Do not tilt the clutch piston.

   Unscrew the clamping screw through multiple rotations in a counterclockwise direction with the WAF 10 hexagon socket wrench as far as it will go.

   Repeat this work step at the two other clamping screws.

7. In a second round, tighten all three clamping screws with a WAF 10 hexagon socket wrench. Tightening torque: 20 Nm

8. Screw in the screw plugs into the openings and tighten.

Tightening torque: 30 Nm

9. Only perform this work step for the electric transmission actuation.

Connect the pilot valve actuation plugs.

10. Only perform this work step for the mechanical transmission actuation.

Attach the pull-push cable.

6.7 Operating the filter during operation

With this transmission family, a change-over filter with a filter cartridge and a protective filter is used with transmissions approved by a classification society. This change-over filter can be switched from the filter cartridge to the protective filter during operation. The filter cartridge can be replaced during operation if necessary.

It is only permissible to operate the protective filter while the filter cartridge is being replaced.

Depending on the position of the change lever, either the filter cartridge or the protective filter is in operation *(refer to tab. 29, page 288)*.

Position of the change lever	filter cartridge	Protective filter
	In operation	Out of operation
	Out of operation	In operation

Tab. 29 Position of the change lever

6.7.1 Switching the filter to the protective filter

Requirements:

- Alarm for filter contamination is active.

1. Turn change lever (1) by 90° from position (A) to position (B) very slowly.

   → Filter cartridge is out of operation
   → Protective filter is in operation

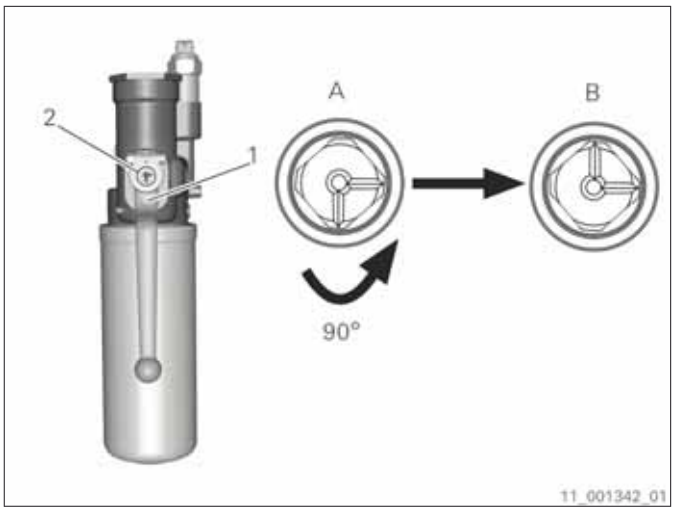

Fig. 219

A Filter cartridge in operation
B Protective filter in operation
1 switching lever
2 Change lever position indicator

6.7.2 Replacing the filter cartridge

Requirements:

- Filter cartridge is excessively contaminated.
- Oil temperature amounts to max. 40-50°C.
- New filter cartridge has been pre-filled with clean oil. In doing so, only use lubricant from the currently valid ZF List of Lubricants.

⚠ DANGER

Risk of crushing due to rotating parts.
Death or serious injury probable.

⇨ Install protection devices.
⇨ Wear tight-fitting clothing.
⇨ Wear a hair net.

⚠ Observe additional information *(refer to section General safety instructions, page 13)*.

Removing the filter cartridge

1. Slowly turn change lever (1) by 90° from position (A) to position (B).

   → Filter cartridge is out of operation
   → Protective filter is in operation

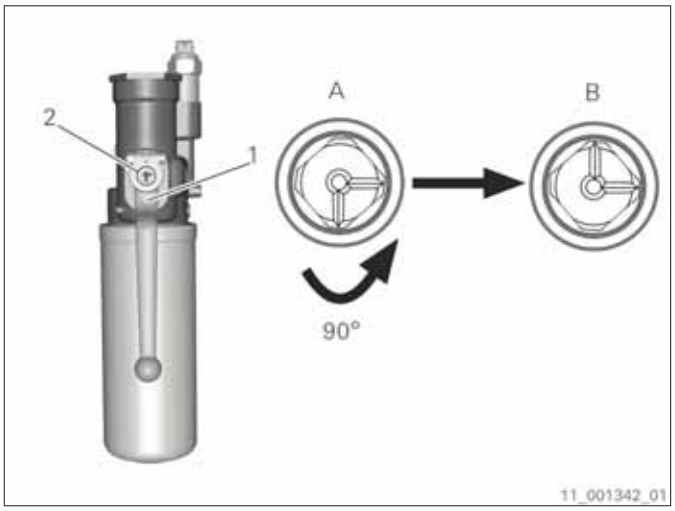

Fig. 220

A Filter cartridge in operation
B Protective filter in operation
1 switching lever
2 Change lever position indicator

2. Carefully loosen vent screw (3) by turning two rotations as the filter is under pressure.

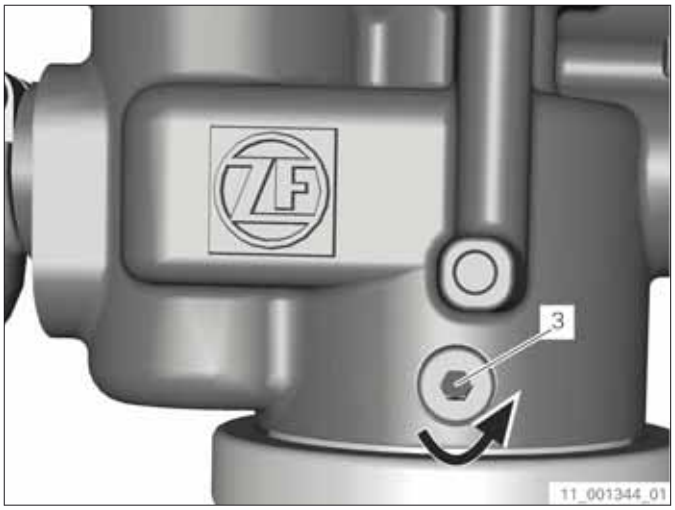

Fig. 221

3.

⚠ CAUTION

Risk of burns due to contact with hot oil.
Slight or moderate injury possible.

⇨ Wear protective goggles.
⇨ Wear protective gloves.

Remove filter cartridge (4) and collect oil in a suitably large container.

Do not reuse oil.

Fig. 222

Installing the filter cartridge

4. Apply a little bit of oil to the O-ring (5) of the new filter cartridge (4).

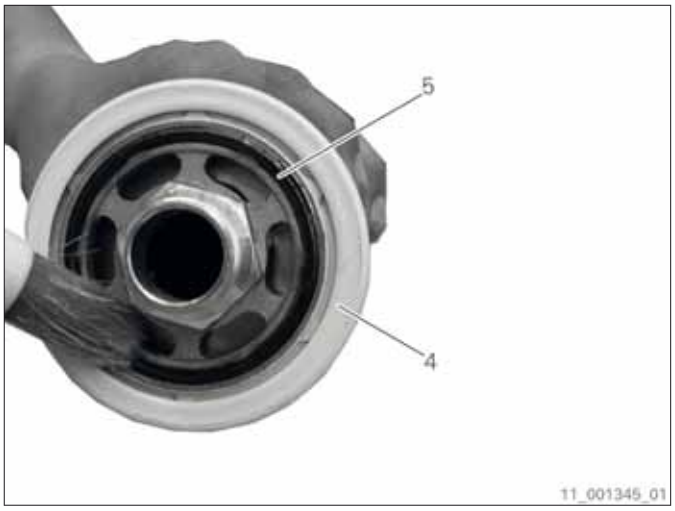

Fig. 223

5. Before installing the new filter cartridge (4), check whether the designation corresponds with the removed filter cartridge.

6. Screw the filter cartridge (4) to the filter head (6) until they are in contact with each other.

7. Tighten filter cartridge (4) by hand.

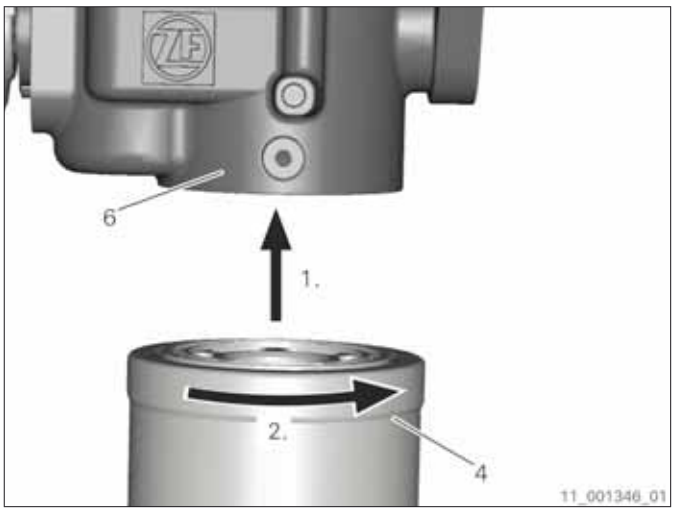

Fig. 224

8. Slowly turn change lever (1) by 90° from position (B) to position (A).

   → Filter cartridge is in operation
   → Protective filter is out of operation

9. Wait until medium emerges from the vent bore without bubbles.

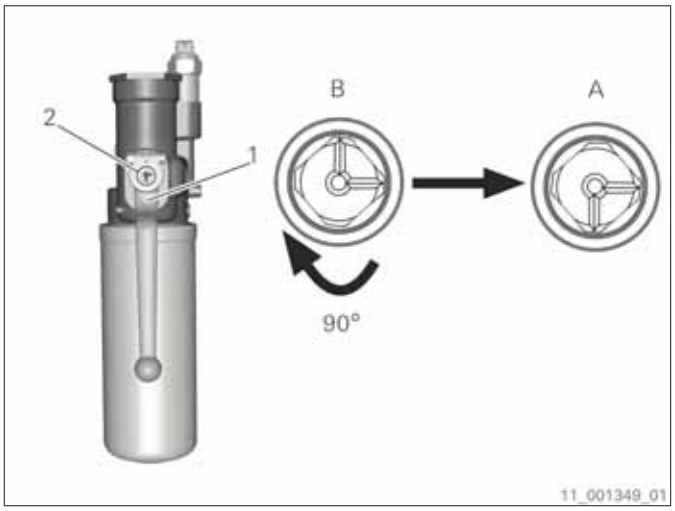

Fig. 225

A Filter cartridge in operation
B Protective filter in operation
1 switching lever
2 Change lever position indicator

10. Tighten vent screw (3).
    Tightening torque: 10 Nm

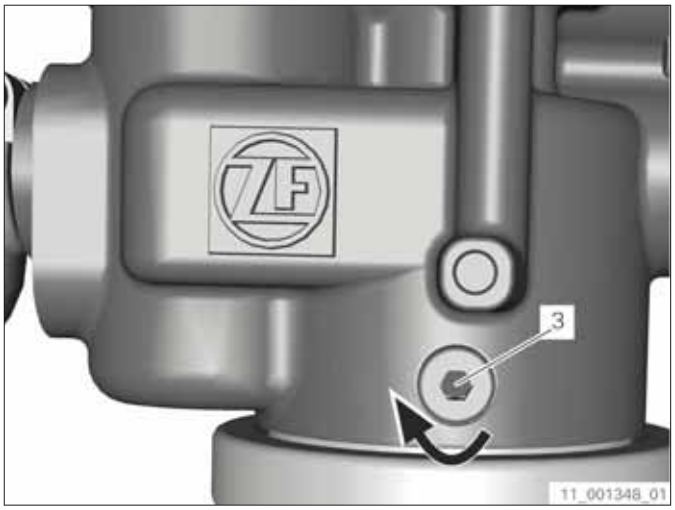

Fig. 226

11. Check the filter for leaks.

7 Transport and Storage

7.1 Transport

When transporting the ZF product, observe the following:

- Only use permitted crane with sufficient load-bearing capacity.
- Only use permitted means of transport and lifting tools with sufficient load-bearing capacity.
- Only attach the ZF product to the designated transport lugs or suspension brackets specified in the transmission installation drawing.
- Other components belonging to the ZF product such as the transmission oil cooler, oil pump, tubings, consoles, sensors, input shaft or output shaft may not be used to accommodate lifting devices.
- When lifting and setting the product down, do not remain beneath the ZF product and keep away from the danger zone.
- Note the center of gravity of the ZF product. Only transport the ZF product in the installation position. The maximum permissible diagonal pull is ten degrees.
- The lifting rope or lifting chain must remain at a minimum distance of 20 mm to the components of the ZF product.
- The lifting tool must be able to at least assume the transmission weight specified on the type plate *(refer to section Transmission designation, page 184)*.
- Lift the ZF product without shocks.
- Secure the ZF product against tilting during transport.
- Secure the ZF product against slipping and tilting when traveling on inclines and ramps.
- Only set the ZF product down on a level, solid platform without any shocks or jolts.
- Note the condition and the load-bearing capacity of the floor or the storage area.
- Never set the ZF product down on the oil pan unless explicitly authorized by ZF Friedrichshafen AG.
- Only put down ZF product in the area of the supporting surface of the foundation screw connection as illustrated in the transmission views and the transmission installation drawing.
- Only store the ZF product in dry and heated rooms.
- Only store the ZF product in its intended installation position.

7.2 Storage

7.2.1 Preservation with ex works delivery

The volume production transmissions as supplied by ZF Friedrichshafen AG are equipped with corrosion protection according to preservation stage I or II *(refer to tab. 30, page 294)*.

The preservation measures for long-term storage must be defined in the transmission order.

Preservation stage	Storage period	Corrosion protection	Packaging type	Implementation/Storage conditions
I	Maximally 12 months until initial operation	Internal preservation: • Anticorrosion oilFuchs Renolin MR 40Z External preservation: • Blank parts with corrosion protection agent Avilub Metacorin, ZF part number: 0671.090.448 • Housing: finished coating or wash priming (on water basis)	• Transmission delivered in wooden box, not watertight. This type of packaging is only adequate for indoor storage. • Customer-specific	After having received the goods: • Remove packaging. • Check external preservation. • Repair or replace damaged protective film with specified corrosion protection agent. • Store in a closed room with few temperature fluctuations and low relative humidity. • Protect against dirt and moisture in the period between installation in the ship and initial operation.
II	Maximally 60 months until installation	Internal preservation: • Anticorrosion oilFuchs Renolin MR 40Z External preservation: • Blank parts with corrosion protection agent Avilub Metacorin, ZF part number: 0671.090.448 • Housing: finished coating or wash priming (on water basis)	• Packaged according to the desiccant method by a specialized company corresponding to TL 8100-001, packaging stage A. • A moisture indicator that can be read from the outside is attached to the packaging (indicates OK / NOK).	After having received the goods: • Do not open packaging. • Check packaging for damage. • Read the moisture indicator. • Store in a closed room with few temperature fluctuations and low relative humidity. • Read moisture indicator before using the transmission and before the maximum storage period has expired. If the moisture indicator shows NOK, contact the local ZF service branch before the transmission is used. • Protect against dirt and moisture in the period between installation in the ship and initial operation.

Tab. 30 Preservation with ex works delivery

7.2.2 Preservation of marine transmissions during storage at the customer

After expiration of the corrosion protection, the corrosion protection has to be extended, in case of preservation stage I with preservation stage III and in case of preservation stage II with preservation stage IV *(refer to tab. 31, page 295)*.

This also applies if the transmission is stored at ZF representations or ZF vendors.

The preservation measures as described below may only be implemented by staff authorized by ZF, otherwise the warranty claim shall become void.

Preservation stage	Storage period	Corrosion protection	Packaging type	Implementation/Storage conditions
III	Extension of preservation stage I *(refer to tab. 30, page 294)* by another 12 months. This type of extension can be repeated twice at maximum. If stored for more than 36 months, perform measures of preservation stage II *(refer to tab. 30, page 294)*.	Internal preservation: • Corrosion protection oil according to MIL-PRF-21260E NATO code C-640 or C-642 or TL 9150-0037 according to BAAINBw External preservation: • Blank parts with corrosion protection agent corresponding to MIL-C-16173D Typ 4, K 19 or TL 8030-015, Typ 4 according to BAAINBw • Housing: finished coating or wash priming (on water basis)	• Transmission delivered in wooden box, not watertight. This type of packaging is only adequate for indoor storage.	• Fill the transmission with the specified corrosion protection oil to the upper measuring mark of the oil dipstick. • Immediately after having filled the corrosion protection oil, perform preservation run for at least 5 min at an engine speed of 500 rpm in enginewise rotation and counter-rotation shift position each. • Check external preservation. • Repair or replace damaged protective film with specified corrosion protection agent. • Store in a closed room with few temperature fluctuations and low relative humidity. • Protect against dirt and moisture in the period between installation in the ship and initial operation. • Observe Shelf Life Extension.
IV	More than 60 months up to 96 months	Internal preservation: • Preservation run without load with corrosion protection oil according to MIL-PRF-21260E NATO code C-640 or C-642 or TL 9150-0037 according to BAAINBw • Completely drain corrosion protection oil. External preservation: • Blank parts with corrosion protection agent corresponding to MIL-C-16173D Typ 4, K 19 or TL 8030-015, Typ 4 according to BAAINBw	New packaging according to preservation stage II *(refer to tab. 30, page 294)*	• Visually inspect transmission and replace aged parts. • Store in a closed room with few temperature fluctuations and low relative humidity. • Read moisture indicator before using the transmission and before the maximum storage period has expired. If the moisture indicator shows NOK, contact the local ZF service branch before the transmission is used. • Protect against dirt and moisture in the period between installation in the ship and initial operation. • Observe Warranty Reinstatement Policy.

Tab. 31 Measures at the customer to extend the ex works corrosion protection before installation in the ship

8 Decommissioning

8.1 Work prior to decommissioning or prior to an extended downtime

8.1.1 Closed cooling water circuit

In the event of a closed cooling water circuit, the transmission oil cooler can remain in a filled state.

8.1.2 Open cooling water circuit

In the event of a brief downtime of the unit of less than two weeks, the transmission oil cooler can remain in a filled state.

In the event of an extended decommissioning of the unit, drain the transmission oil cooler on the water end.

The draining is only required if the transmission oil cooler is not automatically drained when the cooling water pump is stationary.

Cooling system	Downtime period	Actions
Open cooling water circuit using seawater	> two weeks	Drain the transmission oil cooler on the water end. Also rinse the transmission oil cooler with clean fresh water. If possible, dry the tube bundle from the inside with compressed air.

Tab. 32 Downtime period and actions for draining the transmission oil cooler

8.2 Corrosion protection and preservation

The corrosion protection measures required in the event of extended breaks in operation for a transmission installed in the ship depend on:

- Temperature fluctuations
- Atmospheric humidity
- Air salt content in the machine room

The recommended actions and time information therefore only represent rough reference values.

NOTICE

Property damage due to uncontrolled movement of the ship during preservation run possible.

⇨ Ensure sufficient free space around the ship.

⇨ Moor ship.

⇨ Mechanically separate output from transmission.

Preservation stage	Downtime period	Corrosion protection	Implementation/Storage conditions
V	Up to maximally 12 months	No special corrosion protection required. The transmission oil may remain in the transmission.	• Start the engine every 10 to 20 days and, for lubrication purposes, allow the transmission to run for at least 5 min at engine idle speed or at a slightly increased engine speed. In doing so, the transmission can be in neutral, enginewise rotation or counter-rotation shift position. • Prior to recommissioning, check the oil for condensate. This test must take place immediately after switching off the engine. The oil may not be opaque. • Adhere to oil change intervals *(refer to Section Maintenance work 141: Changing the oil)* in the corresponding operating instructions.
VI	12 months to maximally 36 months	Internal preservation: • Corrosion protection oil according to MIL-PRF-21260E NATO code C-640 or C-642 or TL 9150-0037 according to BAAINBw External preservation: • Blank parts with corrosion protection agent corresponding to MIL-C-16173D Typ 4, K 19 or TL 8030-015, Typ 4 according to BAAINBw • Housing: finished coating or wash priming (on water basis)	• Fill the transmission with the specified corrosion protection oil to the upper measuring mark of the oil dipstick. • Immediately after having filled the corrosion protection oil and every 12 months, start the engine and let transmission run for at least 5 min at engine idle speed or at slightly increased engine speed in enginewise rotation and counter-rotation shift position each. • Check external preservation. • Repair or replace damaged protective film with specified corrosion protection agent. • Protect against dirt and moisture. • Prior to recommissioning, completely drain the corrosion protection oil and fill the transmission with the specified oil grade and oil quantity *(refer to Section Maintenance work 141: Changing the oil)* in the corresponding operating instructions.

Tab. 33 Measures at customer before and after a downtime

Preservation stage	Downtime period	Corrosion protection	Implementation/Storage conditions
VII	36 months to maximally 60 months	Internal preservation: • Corrosion protection oil according to MIL-PRF-21260E NATO code C-640 or C-642 or TL 9150-0037 according to BAAINBw External preservation: • Blank parts with corrosion protection agent corresponding to MIL-C-16173D Typ 4, K 19 or TL 8030-015, Typ 4 according to BAAINBw • Housing: finished coating or wash priming (on water basis)	• Visually inspect transmission and replace aged parts. • Check external preservation. • Repair or replace damaged protective film with specified corrosion protection agent. • Protect against dirt and moisture. • Fill the transmission with the specified corrosion protection oil to the upper measuring mark of the oil dipstick. • Immediately after having filled the corrosion protection oil and every 12 months, start the engine and let transmission run for at least 5 min at engine idle speed or at slightly increased engine speed in enginewise rotation and counter-rotation shift position each. Do not perform the following four steps in case of labyrinth seals and chamber seals. • Completely fill the transmission with the specified corrosion protection oil. • Close opening of oil dipstick. • Remove breather. • Seal all openings. • Prior to recommissioning, completely drain the corrosion protection oil and fill the transmission with the specified oil grade and oil quantity *(refer to Section Maintenance work 141: Changing the oil)* in the corresponding operating instructions.

Tab. 34 Measures at customer before and after a downtime (continued)

9 Maintenance

9.1 Operating range

The transmission family belongs to the following application groups. The maximum ratio between the engine power and the engine speed is specified on the type plate. The transmission can be operated up to this ratio.

9.1.1 Application group P

Characteristics of application group P:

- Engine data for the transmission classification: Maximum power for intermittent operation
- Operating mode: intermittent operation with very strongly differing engine speeds
- Annual operating hours: up to about 500 h
- Preferred hull form: planing hull
- Typical field of application: private recreational boats, private pleasure craft

9.1.2 Application group L

Characteristics of application group L:

- Engine data for the transmission classification: maximum power for intermittent operation
- Operating mode: intermittent operation with strongly differing engine speeds
- Annual operating hours: up to approx. 2,500 h
- Preferred hull form: planing hull, semi-planing hull
- Typical field of application: marine boats, governmental vessels and similar ships, private charter boats

9.1.3 Application group M

Characteristics of application group M:

- Engine data for the transmission classification: maximum power for intermittent operation
- Operating mode: intermittent operation with differing engine speeds
- Annual operating hours: up to approx. 4,000 h
- Preferred hull form: semi-planing hull, displacement hull
- Typical field of application: marine boats, governmental vessels and similar ships, charter boats

9.1.4 Application group C

Characteristics of application group C:

- Engine data for the transmission classification: maximum continuous power
- Operating mode: continuous operation with maximum engine output
- Annual operating hours: unlimited
- Preferred hull type: displacement hull
- Typical field of application: workboats

9.2 Maintenance schedule

9.2.1 Maintenance schedule concept

The maintenance intervals are reference values. Particular operating conditions and technical requirements may make it necessary to add maintenance work or to change the maintenance intervals.

In addition, it may make sense to adjust the operating hours specified in the maintenance schedule to the corresponding maintenance schedule of the engine, provided the specified operating hours are not significantly exceeded as a result. This applies in particular to maintenance levels A4 and A5.

The maintenance work number specified in the maintenance work marks the respective maintenance position. The maintenance work number serves as a reference for the required scope of tools and parts.

The maintenance position is marked on the transmission view in the respective maintenance work.

The maintenance positions in dashed circles mark the maintenance work which must be carried out together with the maintenance positions in solid black circles.

Maintenance level	Application groups	Operating hours	Limit value
A1	All	Every day of operation	3 months
A2	All	Every 500 h	6 months
A3.1	All	---	Annually
A3	All	Every 2,000 h	2 years
A4	C and M	---	5 years
	L and P	---	8 years
A5	All	Inquiry of major overhaul interval at ZF service or ZF plant customer service as of 10,000 h	With every major overhaul of the engine

Tab. 35 Periodic maintenance work

Maintenance level	Operating hours	Limit value
Z1	50-100 h	12 months

Tab. 36 Additional nonrecurring maintenance work for a transmission repaired or overhauled outside the plant

Maintenance level	Operating hours	Limit value
Z2	---	2 months

Tab. 37 Additional nonrecurring maintenance work for a new transmission

9.2.1.1 Major overhaul

Detailed information on major overhaul intervals can only be given based on individual ship application conditions considering load profiles and usage profiles. For further information, contact the regional competence centers of the ZF service network. ZF Friedrichshafen AG recommends to coordinate the major overhaul intervals after approx. 10,000 operating hours with ZF service.

As limit value for the major overhaul intervals, ZF Friedrichshafen AG recommends to plan the major overhaul of the transmission in line with the planned major overhaul of the engine.

The joint major overhaul of engine and transmission reduces costs for:

- Access to the transmission
- Removal and reinstallation of the transmission if the major overhaul is done at a workshop.

During ship operation, the transmission is subject to wear. In addition, temporary decommissioning impacts the transmission's reliability. Thus, replace wear parts during major overhaul even before the wear limits are exceeded. Progressive wear impacts the transmission's reliability. A major overhaul increases the transmission's reliability up to the level of a new transmission. A major overhaul fulfills or extends the transmission's planned product life cycle. The major overhaul interval depends upon the corresponding application groups *(refer to section Operating range, page 299)*.

9.3 Maintenance work schedule

Maintenance level								Maintenance work		Necessary tools
periodic						nonrecurring				
A5	A4	A3.1	A3	A2	A1	Z1	Z2			
x	x		x	x	x			101	Checking the oil level	---
x	x		x	x	x			103	Conducting visual inspections	---
x	x		x	x				121	Cleaning the transmission exterior	---
x	x		x	x		x		122	Retightening all screw connections accessible from the outside	W1
x	x		x	x		x		123	Checking the mechanical actuation shift settings	---
x	x		x	x				124	Greasing the moving external parts of the mechanical actuation	---
x	x		x			x		141	Changing oil	W1
x	x		x			x		142	Replacing filter cartridge and cleaning power take-in filter	W1
x	x		x	x				161	Conducting visual inspection at torsionally flexible coupling	---
x	x							162	Conducting visual inspection at flexible transmission mounting and flexible engine mounting	---
x	x							163	Conducting visual inspection at clutch disks	W1
x	x							164	Conducting visual inspection at running gearing	W1
x	x							165	Checking oil pumps	W1
x	x							166	Checking control unit and valve block of power take-in and shaft brake	W1
x	x							167	Checking electric and mechanical actuation unit	W1
x	x							168	Recalibrating the display device	---
x	x	x					x	169	Visually inspecting and cleaning transmission oil cooler	W1
x	x							172	Checking the injector tube valve	W1
x	x							173	Checking the shaft sealing ring of the input shaft	---
x	x							174	Checking the shaft sealing ring of the output shaft	---
x	x		x	x				181	Visually inspecting and cleaning power take-in brake	W1
x	x							182	Visually inspecting and cleaning additional equipment	W1
x								200*	Major transmission overhaul	W2

Tab. 38 Maintenance work schedule

* For procedure, refer to repair instructions
W1 For tool kit, refer to operating instructions
W2 For tool kit, refer to repair instructions

9.4 Spare parts orders and ZF service branches

9.4.1 Spare parts orders

Only use original ZF spare parts to replace components or assemblies during maintenance work and repairs. For spare parts orders and spare parts inquiries, provide the following information from the type plate:

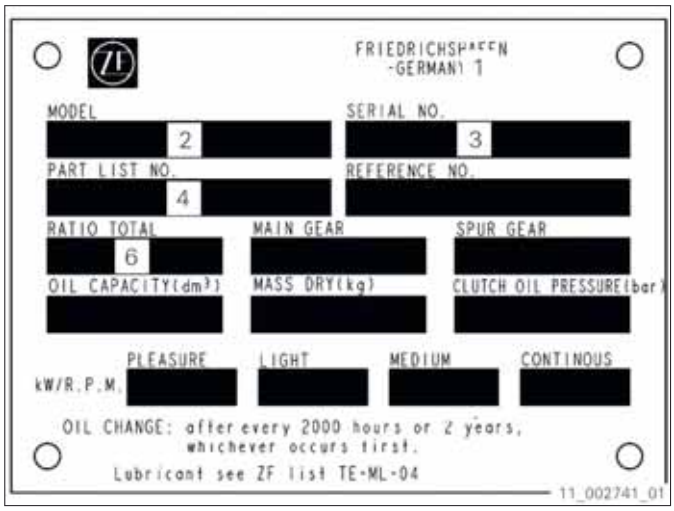

Field 2 MODEL
Field 3 SERIAL NO.
Field 4 PART LIST NO.
Field 6 RATIO TOTAL

Fig. 227

The information in fields 2 through 4 and 6 on the type plate is always necessary for the following inquiries:

- Inquiry about the transmission
- Troubleshooting inquiry
- Maintenance inquiry
- Inquiry regarding extra equipment order

For classified spare parts also specify the desired type of test.

Also specify these points when you place orders with transmission parts list information and when you place orders for exchange units.

The parts required, according to the maintenance level, to perform the periodic maintenance work can be ordered as a maintenance set. The parts necessary for a major overhaul of a transmission or assembly are also offered as repair sets and spare parts sets.

9.4.2 ZF service branches

If a failure at the transmission cannot be eliminated, contact the next ZF service branch *(refer to Chapter Troubleshooting, page 425)*. Detailed information about the transmission is also available there.

You can find the ZF service branches responsible for your region at www.zf.com in the upper navigation bar in the Products & Services pull-down menu.

If needed, a list of the ZF service branches with the latest contact information can also be requested at ZF Friedrichshafen AG in Friedrichshafen.

9.5 Notes on maintenance

9.5.1 General notes

The specification of the operating supplies as well as the list of manufacturers are listed in the ZF List of Lubricants TE-ML 04. This list is available at every service branch of ZF Friedrichshafen AG. The ZF List of Lubricants TE-ML 04 can be downloaded as a PDF document from the Internet free of charge at www.zf.com.

The following lists contain the auxiliary materials recommended by ZF Friedrichshafen AG; these include cleaning agents, lubricants, and sealing compounds. The associated regulations for the operating supplies can be obtained from the respective manufacturers. When work is performed on the transmission, only use auxiliary materials and operating supplies which correspond to the ZF specification and have been released by the respective manufacturer.

Observe the use instructions of the respective manufacturer.

For the maintenance of all components that are not listed in the maintenance schedule, manufacturer specifications apply.

Perform a functional test after maintenance work.

ZF Friedrichshafen AG recommends keeping a maintenance log containing the following information:

- Person responsible for and person performing the maintenance work
- Maintenance level
- Time of the maintenance work listing both the execution date and the number of operating hours

9.5.2 Lubricating grease

The specified lubricating greases and lubricating oils are listed in the ZF List of Lubricants TE-ML 04.

9.5.3 Recommended auxiliary materials and operating supplies

Manufacturer	Designation	Use	Instructions for use	Source of supply
Loctite	Loctite 574 Temperature-resistant: -55°C to +150°C	Sealing surfaces of housing and cover	• Clean parts. • Apply enough product to fill gap. • Join parts. • Allow product to harden.	Henkel AG & Co. KGaA, Gutenbergstr. 3, 85748 Garching, Germany Phone: +49 89 9268 0 Fax +49 89 910 1978
	Loctite 243 Temperature-resistant: -55°C to +180°C Loctite 262 Temperature-resistant: -55°C to +150°C	Threadlockers	• Clean parts. • Apply enough product to fill gap. • Join parts. • Allow product to harden.	Henkel AG & Co. KGaA, Gutenbergstr. 3, 85748 Garching, Germany Phone: +49 89 9268 0 Fax +49 89 910-1978

Tab. 39 Sealing compound

Manufacturer	Designation	Use	Instructions for use	Source of supply
Dykem Red	Dykem Red DX-296/8 oz Made in Germany	Depiction of tooth flank contact patterns for transmissions with acceptance specification of classifications societies	---	Firma Helling GmbH, Spökerdamm 2, 24536 Heidgraben (near Hamburg), Germany Phone: +49 4122 922 0 Fax +49 4122 922-201

Tab. 40 Varnishes and paints

9.6 Tool kit

9.6.1 Tool kit W1 for maintenance

The tool kit W1 is composed of commercially available tools.

9.6.1.1 General hand tools

General hand tools	Sizes
Open-end wrenches up to width across flats	63 mm
Straight box wrenches up to width across flats	46 mm
Offset box wrenches up to width across flats	46 mm
Set of sockets for wrenches	4-13 mm
Set of sockets for wrenches	11-32 mm
Set of sockets for wrenches	22-50 mm
Set of sockets for wrenches for Allen screws	5-22 mm
Pliers (straight) for securing rings (internal ring)	I 1-4 (no.)
Pliers (straight) for securing rings (external ring)	A 1-4 (no.)
Screwdriver	to 13 mm
Hammers (metal and plastic), drift punch	---

Tab. 41 General hand tools

9.6.1.2 Measuring and testing equipment

Measuring and testing equipment	Sizes
Torque wrench	10-350 Nm
Sliding caliper, depth gage	Measurement ranges up to 300 mm
Feeler gage	Measurement range 0.05-1.0 mm

Tab. 42 Measuring and testing equipment

9.6.1.3 Tools for the emergency control of the transmission

Hexagon socket wrench, length 120 mm, width across flats WAF 10, ZF part number: 1X56.190.808

9.6.1.4 Tools for cleaning the transmission oil cooler

Nylon brush, ZF part number: 0501.327.433

9.7 Maintenance work 101: Check oil level

	ZF 3000 family		
Maintenance work	Maintenance level	Carry out together with the maintenance work	Time in minutes
101	A1	---	15
Tools	---		
Parts	---		
Material	Lint-free cloth		
Test equipment	---		
Location:	Date:		Page 1 of 2

Tab. 43 Maintenance work 101

Fig. 228

9.7.1 Checking the oil level

Requirements:

- Refill oil only when the engine is not running.

Keep in mind that with an initial fill or after a repair or cleaning of the oil filter, part of the oil remains in the transmission oil cooler and in the oil lines and does not flow back into the transmission housing. Therefore check the oil level again after a short startup.

1. After switching off the engine, wait 10 min. until the oil level has settled in the transmission.

2. **⚠ CAUTION**

   Risk of burn injuries due to contact with hot surfaces.
   Slight or moderate injury possible.
   ⇨ Wear protective gloves.

   Pull out the oil dipstick (1) and read off the oil level.

   The correct oil level lies between the top and bottom measuring mark of the oil dipstick.

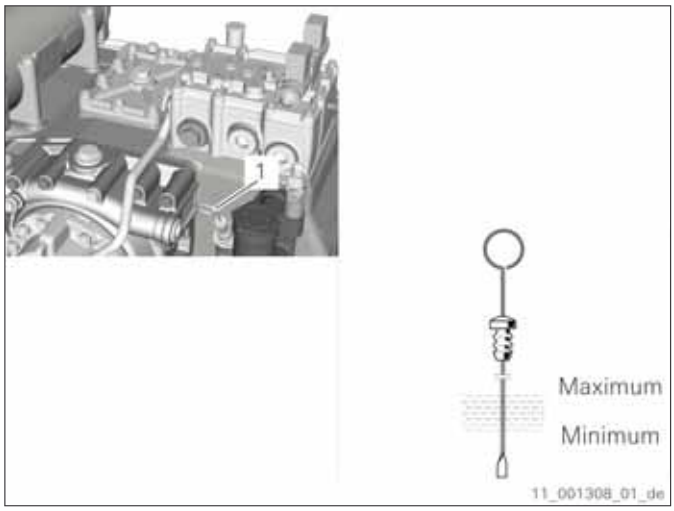

Fig. 229

3. Use filtered oil.

   NOTICE

   The use of a non-approved lubricant can lead to property damage.
   ⇨ Only use lubricant from the currently valid ZF List of Lubricants.

   If necessary, unscrew filler plug (2) and top up oil.

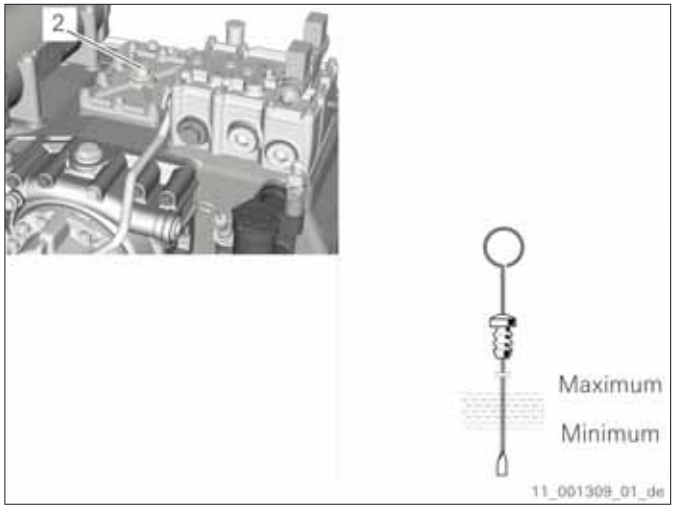

Fig. 230

4. Fit and screw in filler plug (2) with new sealing ring.

5. Tighten filler plug (2).
   Tightening torque: 115 Nm

9.8 Maintenance work 103: Conduct visual inspection

	ZF 3000 family		
Maintenance work	Maintenance level	Carry out together with the maintenance work	Time in minutes
103	A1	121	15
Tools	Lighting products		
Parts	---		
Material	---		
Test equipment	---		
Location:	Date:		Page 1 of 2

Tab. 44 Maintenance work 103

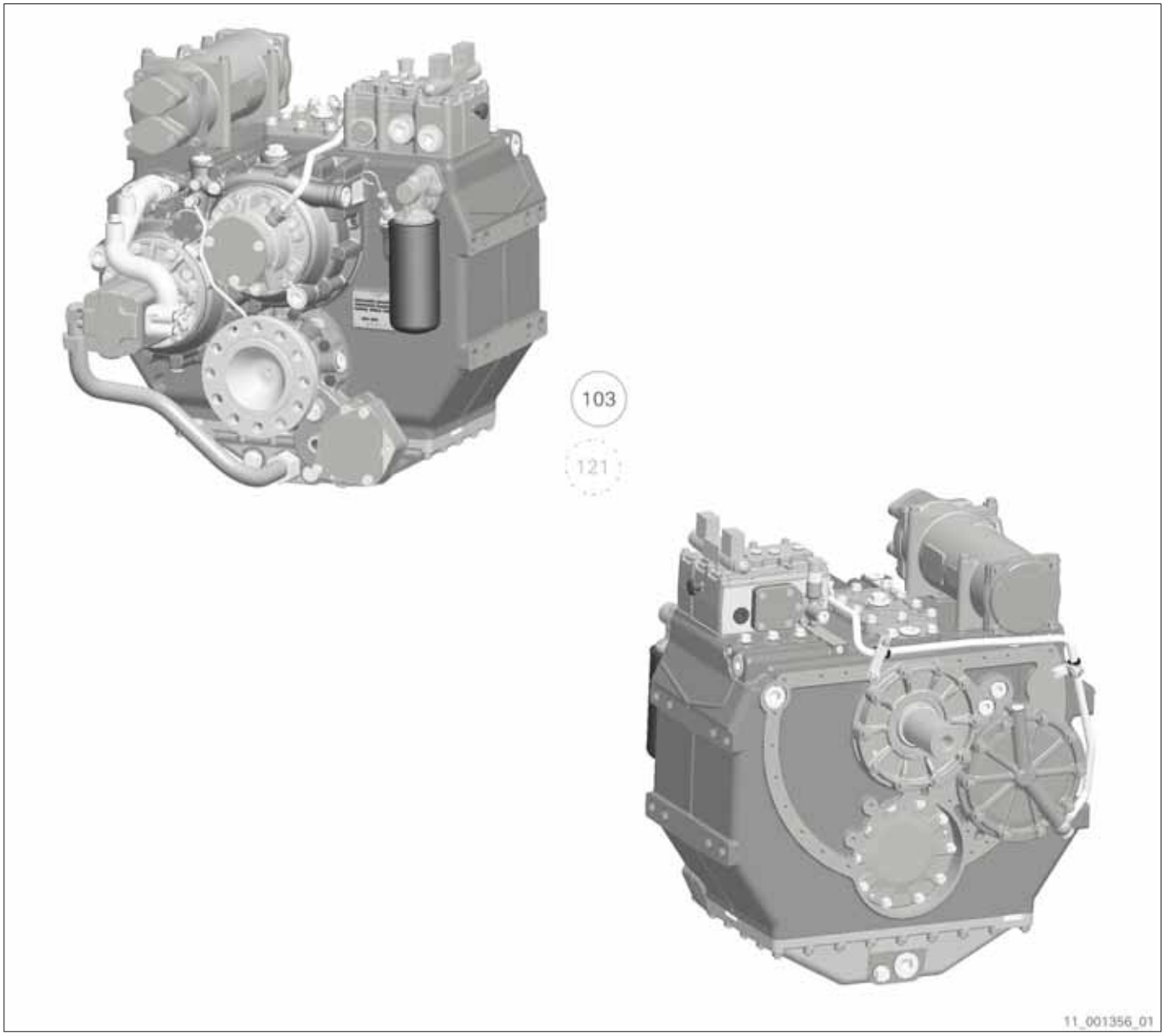

Fig. 231

9.8.1 Conducting visual inspection

If possible, carry out this maintenance work together with maintenance work 121.

DANGER

Risk of crushing due to rotating parts.
Death or serious injury probable.

⇨ Install protection devices.
⇨ Wear tight-fitting clothing.
⇨ Wear a hair net.

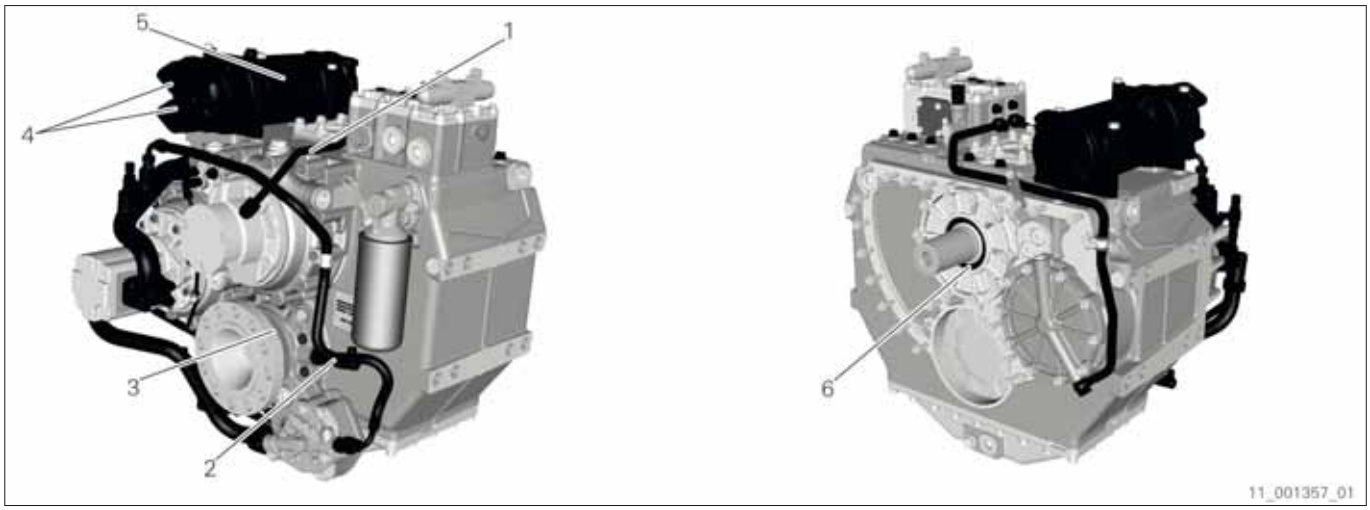

Fig. 232

1 Tubing connections
2 Connections of the monitoring devices
3 Output shaft exit point
4 Cooling water connection at the transmission oil cooler
5 Transmission oil cooler
6 Input shaft exit point

1. Check the following points on the transmission for leakages:
   - Tubing connections
   - Cooling water inlet
   - Transmission oil cooler
   - Output shaft exit point
   - Connections of the monitoring devices
   - Input shaft exit point

2. Check the oil level when the engine is not running *(refer to section Checking the oil level, page 308)*.

   When checking the oil level, also check whether water is leaking into the transmission oil or whether oil is leaking into the water.

9.9 Maintenance work 121: Clean transmission exterior

	ZF 3000 family		
Maintenance work	Maintenance level	Carry out together with the maintenance work	Time in minutes
121	A2	103	30
Tools	---		
Parts	---		
Material	Cleaning agent, lint-free cloth		
Test equipment	---		
Location:	Date:		Page 1 of 2

Tab. 45 Maintenance work 121

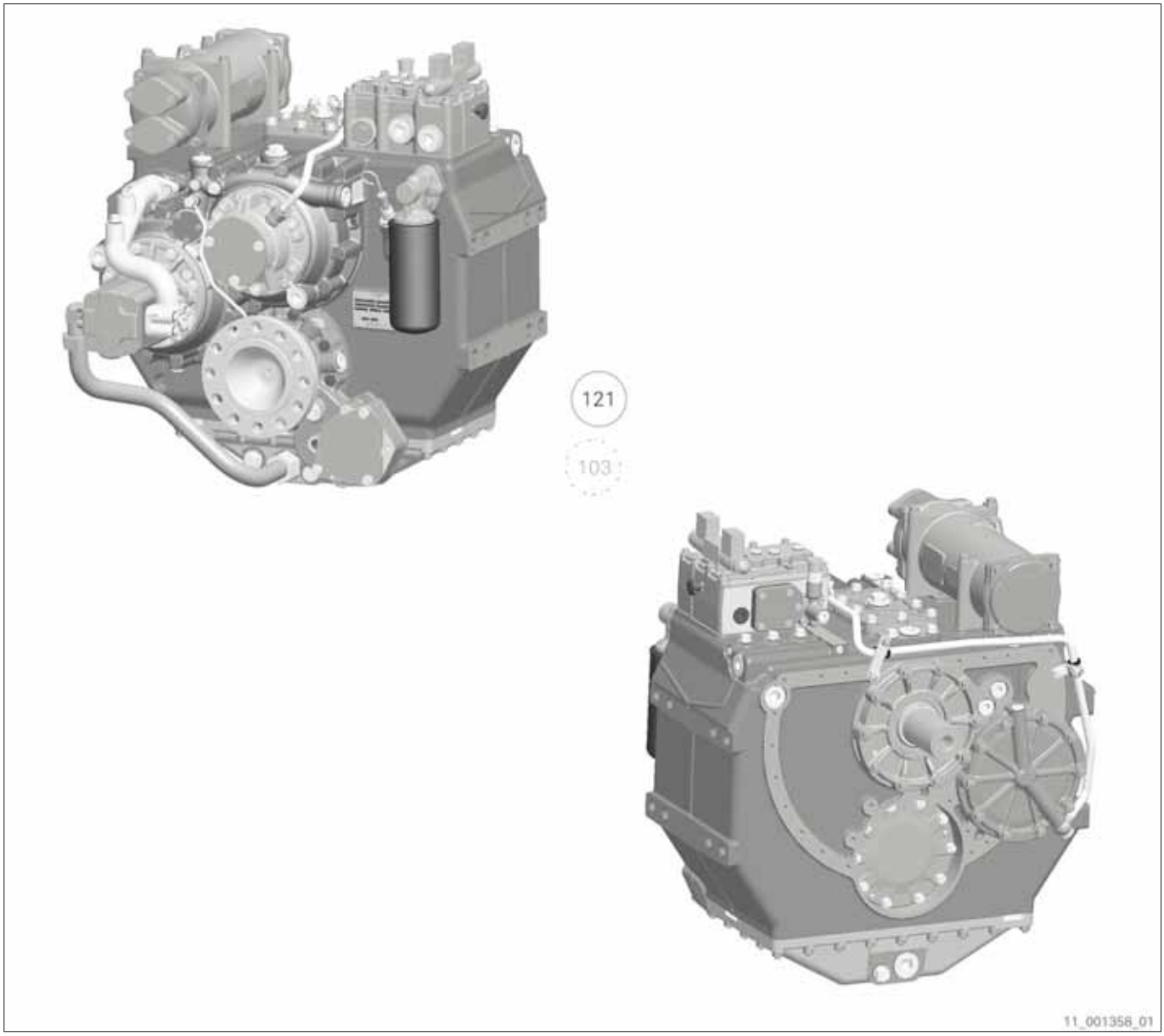

Fig. 233

9.9.1 Cleaning the transmission exterior

If possible, carry out this maintenance work together with maintenance work 103.

Only use cleaning agents which correspond to the accident prevention regulations valid at the location of use.

Clean transmission on input side

1. Keep following parts away from the cleaning agent:

   - Rubber parts
   - Hose lines
   - Shaft sealing rings

   NOTICE

   Property damage caused by contact with aggressive liquid possible.

   ⇨ Do not bring the part into contact with aggressive liquid.

   Clean transmission exterior with a cleaning agent so that the visual inspection can be performed.

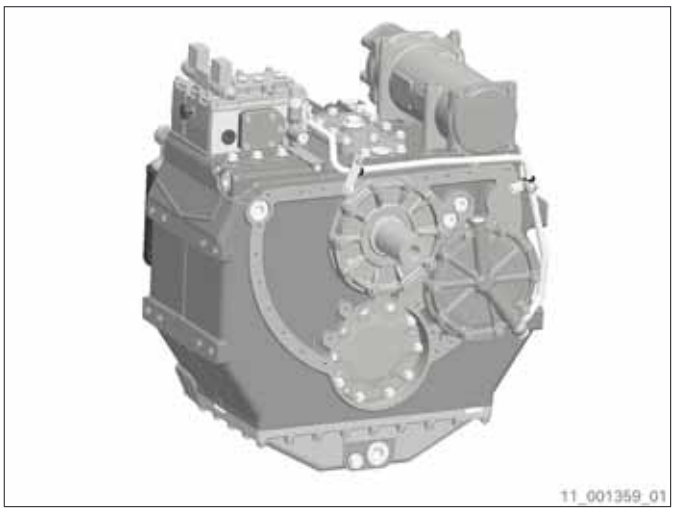

Fig. 234

Clean transmission on output side

2. Keep following parts away from the cleaning agent:

   - Rubber parts
   - Hose lines
   - Shaft sealing rings

   NOTICE

   Property damage caused by contact with aggressive liquid possible.

   ⇨ Do not bring the part into contact with aggressive liquid.

   Clean transmission exterior with a cleaning agent so that the visual inspection can be performed.

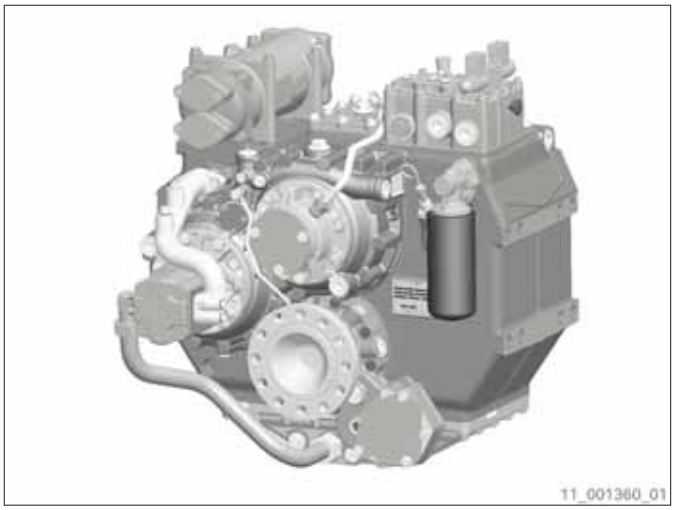

Fig. 235

9.10 Maintenance work 122: Retighten all screw connections accessible from the outside

	ZF 3000 family		
Maintenance work	Maintenance level	Carry out together with the maintenance work	Time in minutes
122	Z1, A2	---	60
Tools	Tool kit W1		
Parts	---		
Material	---		
Test equipment	---		
Location:	Date:		Page 1 of 2

Tab. 46 Maintenance work 122

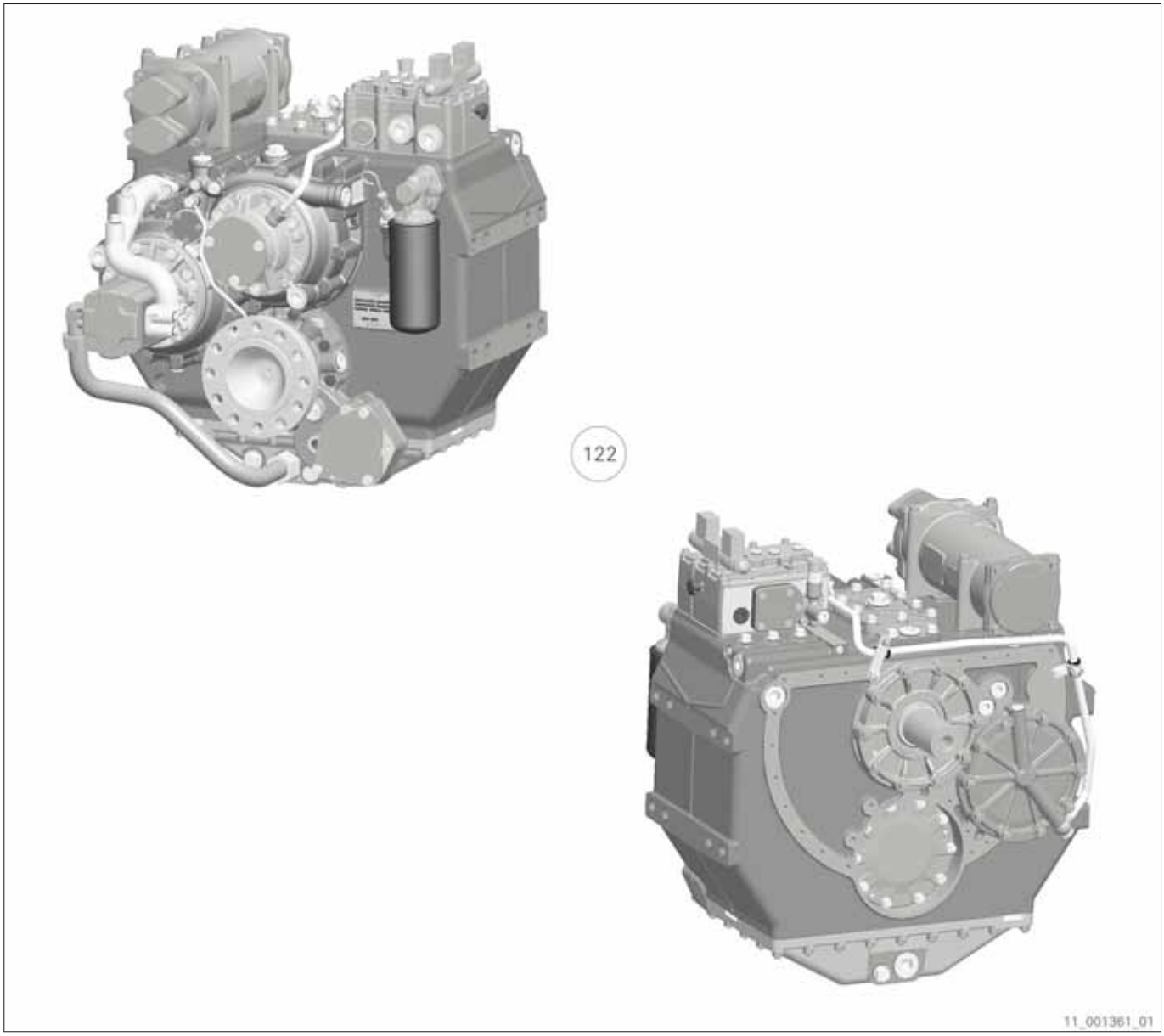

Fig. 236

9.10.1 Retightening all screw connections accessible from the outside

Retighten the screws with a torque wrench when the transmission is at a standstill and at approx. 20°C.

1. Retighten accessible screw connections with a torque wrench.
   Note the following screw connections:
   - Screw connection between torsionally flexible coupling and engine.
   - Screw connection between engine flywheel housing and transmission mounting bell.
   - Screw connection between clamping bracket and transmission.
   - Screw connection between clamping bracket and ship foundation.

2. Check the connections to and from the transmission oil cooler and retighten them as needed.

3. Check the connections of the monitoring devices and, if necessary, retighten them.

9.11 Maintenance work 123: Check mechanical actuation shift settings

	ZF 3000 family		
Maintenance work	Maintenance level	Carry out together with the maintenance work	Time in minutes
123	Z1, A2	---	15
Tools	---		
Parts	---		
Material	---		
Test equipment	---		
Location:	Date:		Page 1 of 5

Tab. 47 Maintenance work 123

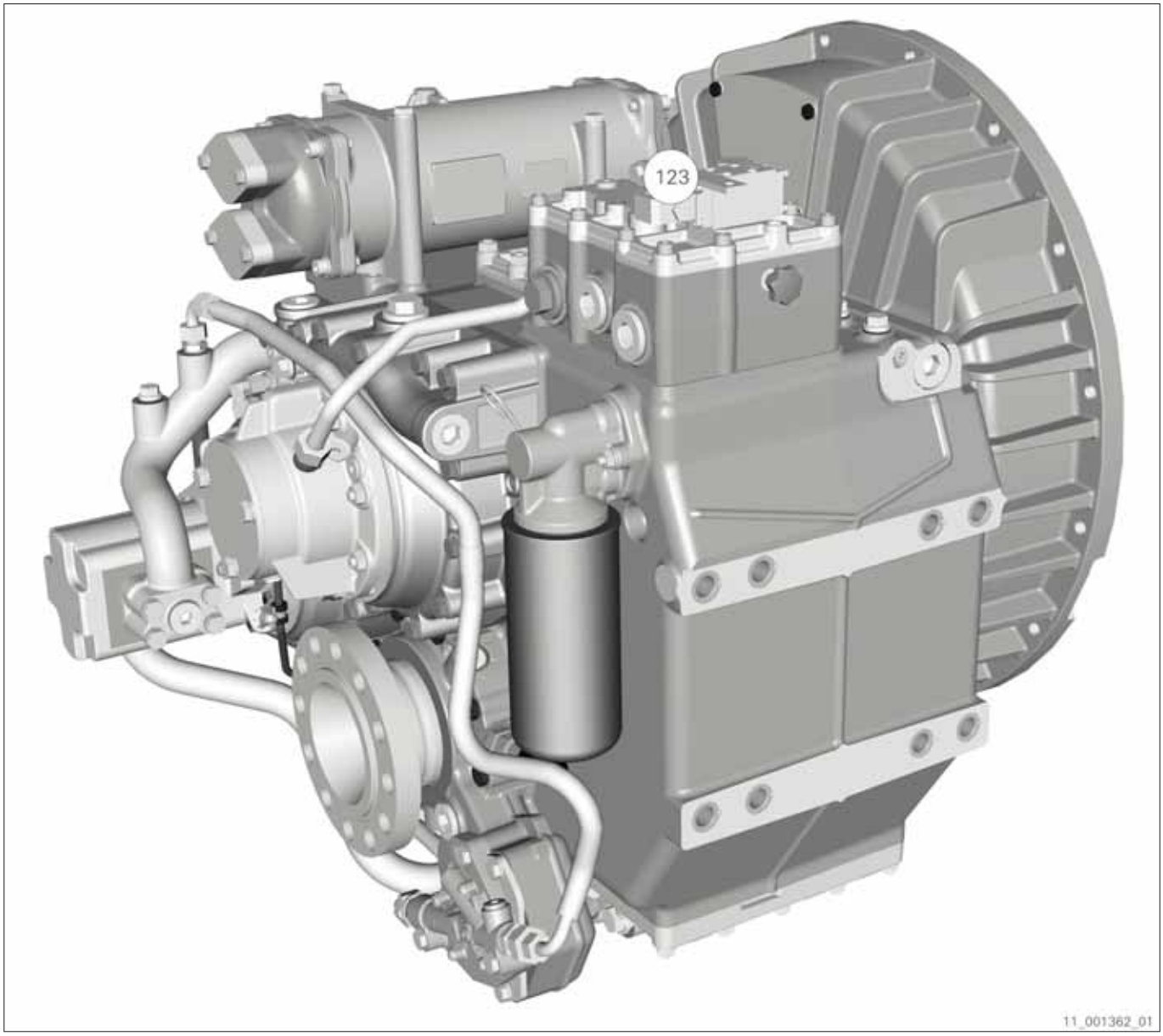

Fig. 237

9.11.1 Shift travel and shift angles of shift lever

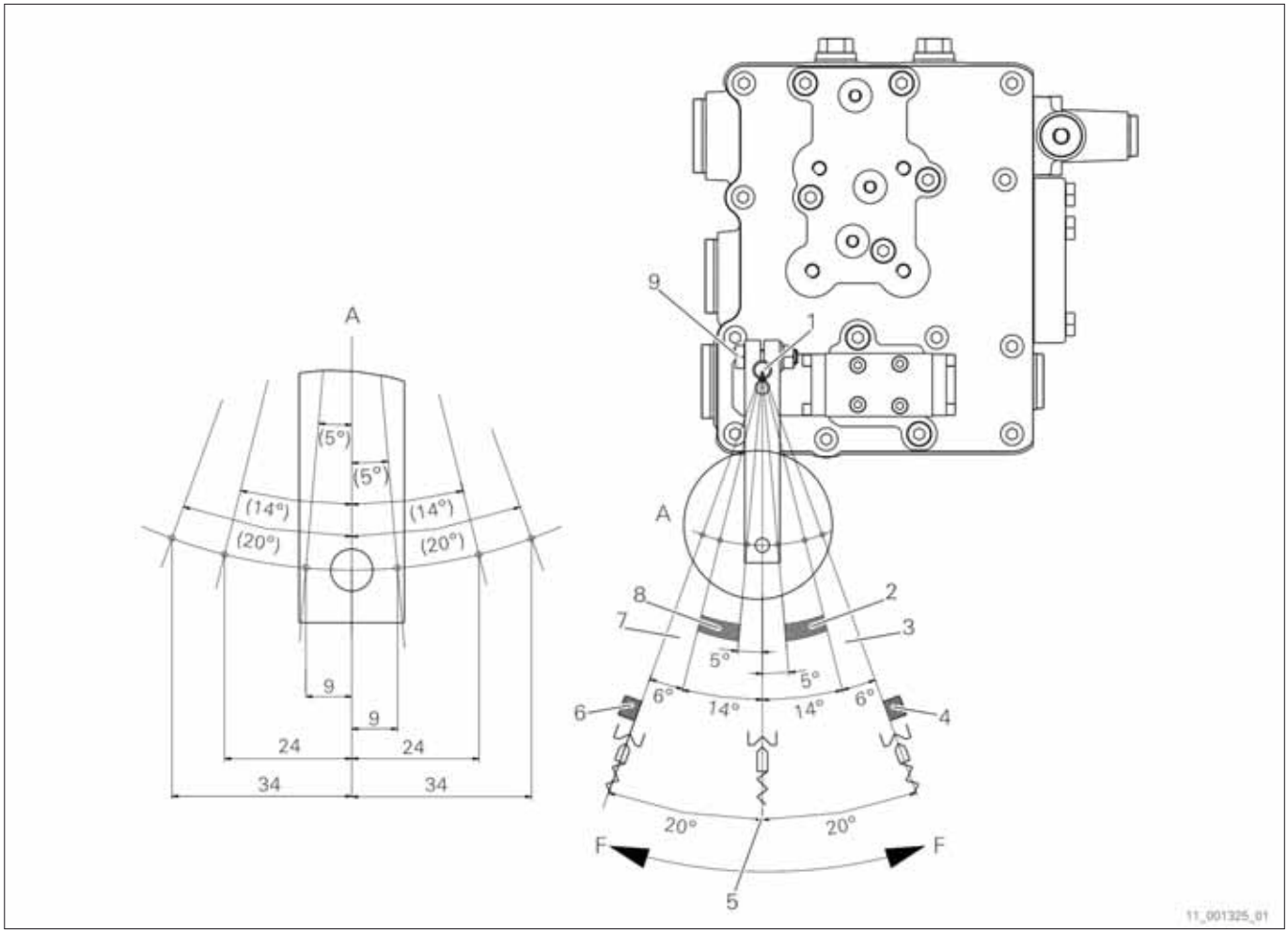

Fig. 238

A Shift travel and shift angles of shift lever
1 Rotation axis of shift lever
3 Detent position for the enginewise rotation shift position
5 Detent position for the neutral shift position
7 Detent position for the counter-rotation shift position
9 Setscrew

F Actuating force at a distance of 100 mm from the shift lever's rotation axis
F = 25 N, permissible force F_{max} = 75 N
2 Undefined shift position
Pass this range quickly.
4 Shift stop, not part of ZF scope of supply
6 Shift stop, not part of ZF scope of supply
8 Undefined shift position
Pass this range quickly.

9.11.2 Checking the mechanical actuation shift settings

Requirements:

- The engine starting mechanism is blocked.

The control unit's shift lever may not remain in the undefined shift range *(refer to section Shift travel and shift angles of shift lever, page 316)*. Reset shift on the power-transmitting linkage if necessary.

1. Unhitch the pull-push cable or the linkage of the mechanical remote actuation on the control unit's shift lever.

2. Bring control unit into the neutral shift position.

3. Move the control unit's shift lever (3) by hand into the neutral shift position and lock it into place.

   The bores on the control unit's shift lever and on the linkage or on the pull-push cable's fork head must be aligned.

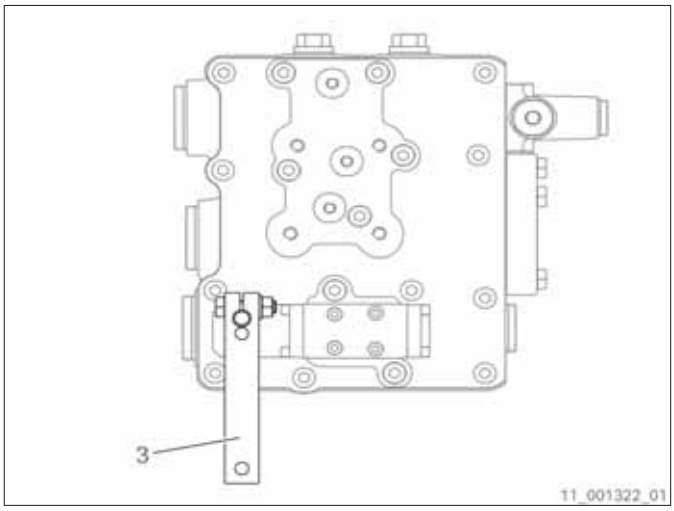

Fig. 239

4. If the shift lever (3) does not reach the neutral shift position, align the shift lever (3) *(refer to section Aligning the shift lever, page 319)*.

5. Bring control unit into the forward shift position.

6. Move the control unit's shift lever (3) by hand as far as it will go into the enginewise rotation or counter-rotation shift position, whichever corresponds to the forward direction of travel.

   The bores on the control unit's shift lever and on the linkage or on the pull-push cable's fork head must be aligned.

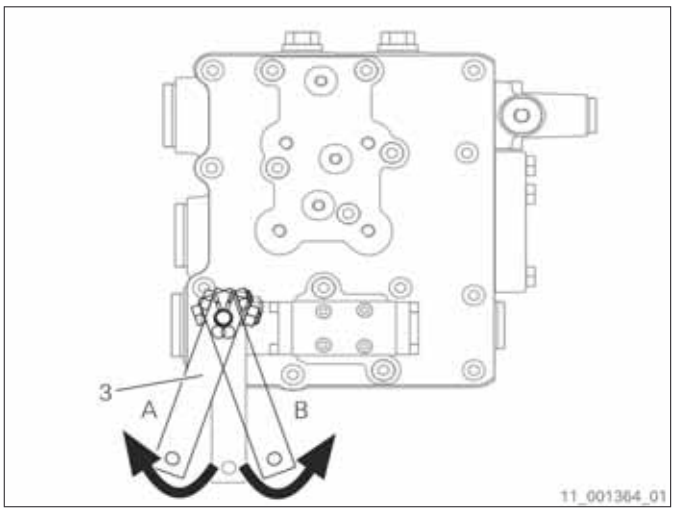

Fig. 240

A Counter-rotation shift position
B Enginewise rotation shift position

7. Bring control unit into the reverse shift position.

8. Move the control unit's shift lever (3) by hand as far as it will go into the enginewise rotation or counter-rotation shift position, whichever corresponds to the reverse direction of travel.

   The bores on the control unit's shift lever and on the linkage or on the pull-push cable's fork head must be aligned.

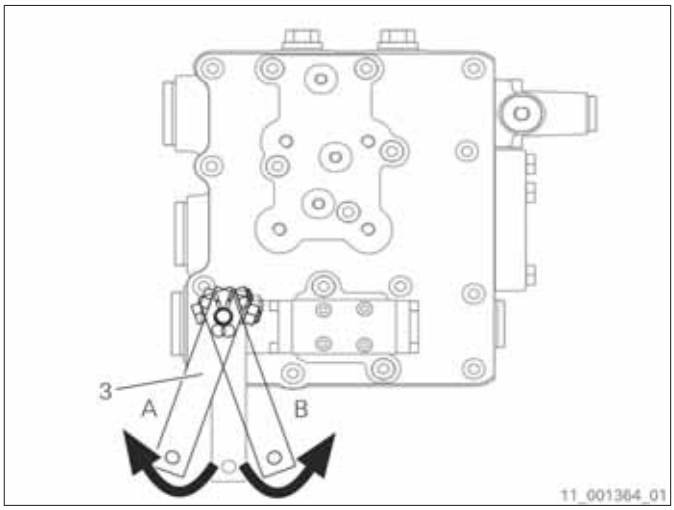

Fig. 241

A Counter-rotation shift position
B Enginewise rotation shift position

9. Hitch the pull-push cable or the linkage of the mechanical remote actuation to the control unit's shift lever.

9.11.3 Aligning the shift lever

Requirements:

- The engine starting mechanism is jammed.
- The pull-push cable or the linkage of the mechanical remote actuation on the control unit's shift lever have been unhitched.
- Control unit is in the neutral shift position.
- The shift lever does not reach the neutral shift position.

1. Loosen nut (2) on screw (1).

2. Align the shift lever (3) in the neutral shift position.

   The bores on the control unit's shift lever and on the linkage or on the pull-push cable's fork head must be aligned.

3. Tighten nut (2) on screw (1).
   Tightening torque: 23 Nm

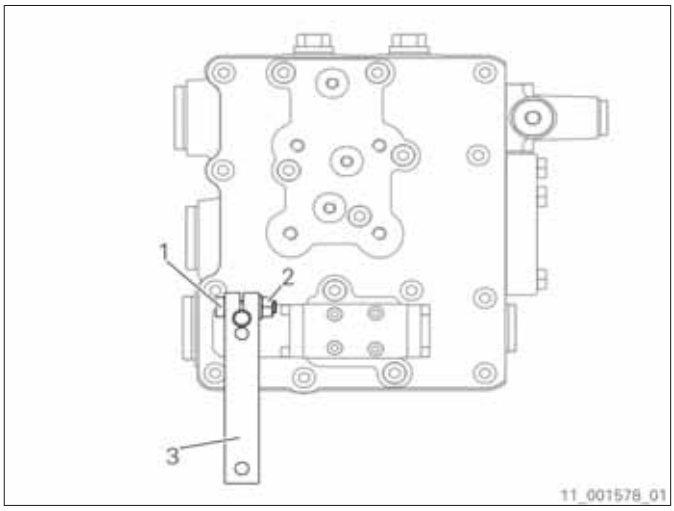

Fig. 242

9.12 Maintenance work 124: Grease moving external parts of the mechanical actuation

	ZF 3000 family		
Maintenance work	Maintenance level	Carry out together with the maintenance work	Time in minutes
124	A2	---	15
Tools	---		
Parts	---		
Material	---		
Test equipment	---		
Location:	Date:		Page 1 of 2

Tab. 48 Maintenance work 124

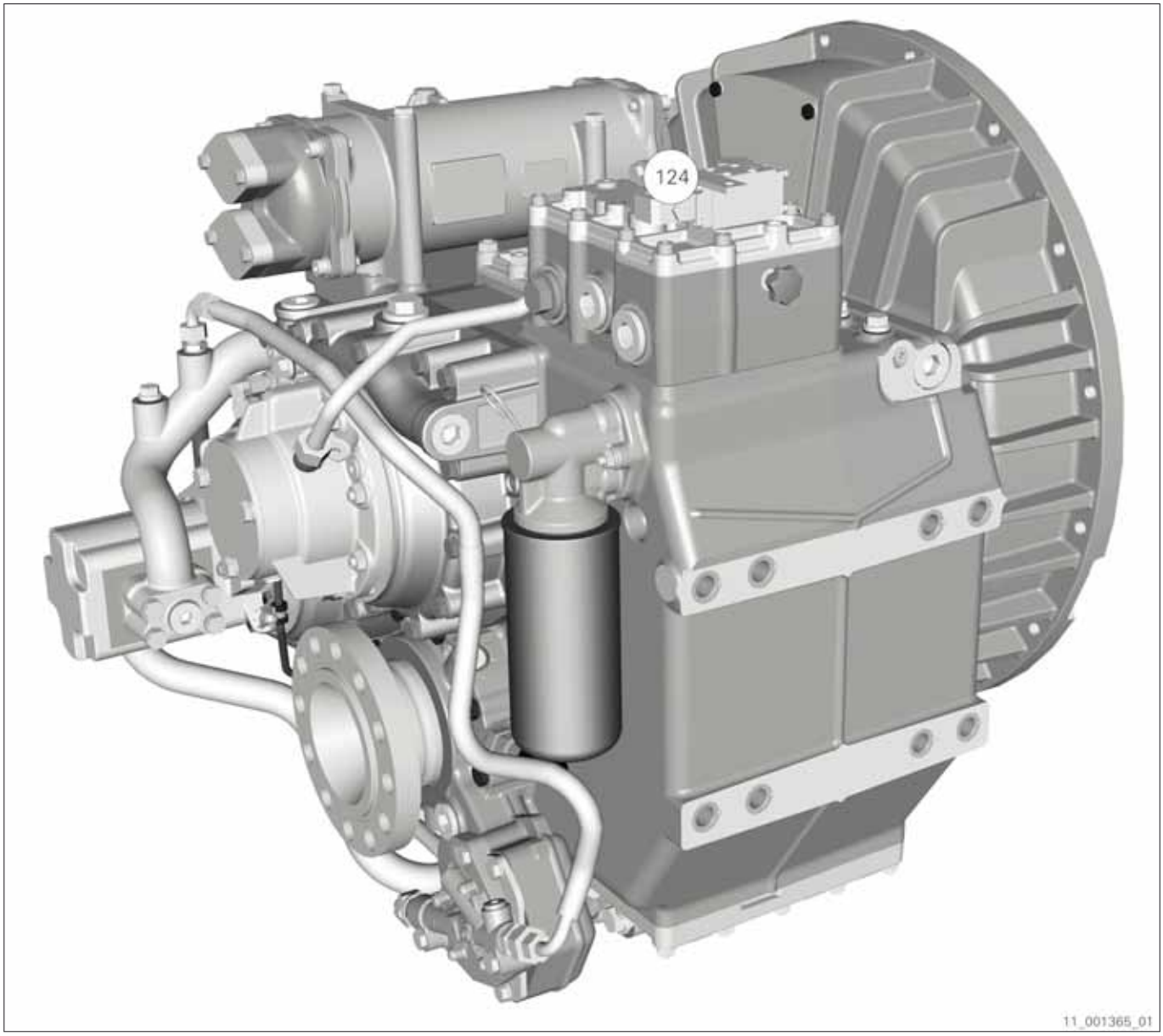

Fig. 243

9.12.1 Greasing the moving external parts of the mechanical actuation

Requirements:

- The engine starting mechanism is blocked.

1. Lubricate the following moving parts of the mechanical actuation unit with a lithium-saponified multi-purpose grease:
   - Fork head on shift lever
   - Linkage connections
   - Connection on control unit

9.13 Maintenance work 141: Change oil

	ZF 3000 family		
Maintenance work	Maintenance level	Carry out together with the maintenance work	Time in minutes
141	Z1, A3	142	60
Tools	Tool kit W1		
Parts	New seal/sealing rings		
Material	Oil pan, cleaning agent, lint-free cloth		
Test equipment	---		
Location:	Date:		Page 1 of 4

Tab. 49 Maintenance work 141

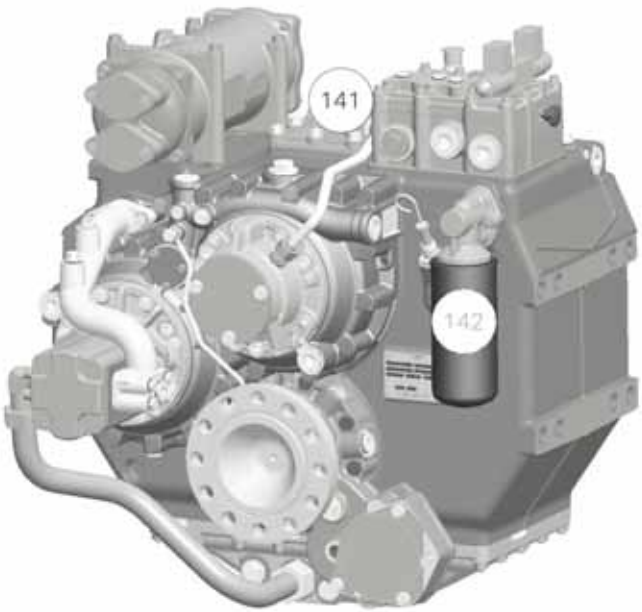

Fig. 244

9.13.1 Changing oil

Requirements:
- The engine starting mechanism is blocked.
- The oil temperature amounts to max. 40-50°C.

If possible, carry out this maintenance work together with maintenance work 142.

Observe additional information *(refer to section General safety instructions, page 13)*.

1. Pull out the oil dipstick.

2. **CAUTION**

   Risk of burns due to contact with hot oil.
   Slight or moderate injury possible.
   ⇨ Wear protective goggles.
   ⇨ Wear protective gloves.

   Unscrew drain plug (1) and drain the oil.

3. Suck off the oil if an oil suction device has been installed on the transmission.

4. Place new sealing ring on drain plug (1).

5. Screw in drain plug (1) and tighten.
   Tightening torque: 70 Nm

6. Close the suction device if an oil suction device was used.

7. Screw out filler plug (2).

8. Use filtered oil.

   NOTICE

   The use of a non-approved lubricant can lead to property damage.
   ⇨ Only use lubricant from the currently valid ZF List of Lubricants.

   Fill transmission with new oil.

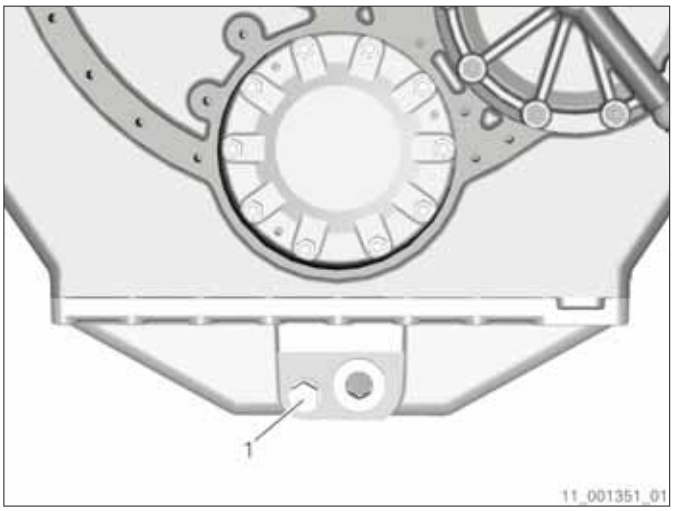

Fig. 245

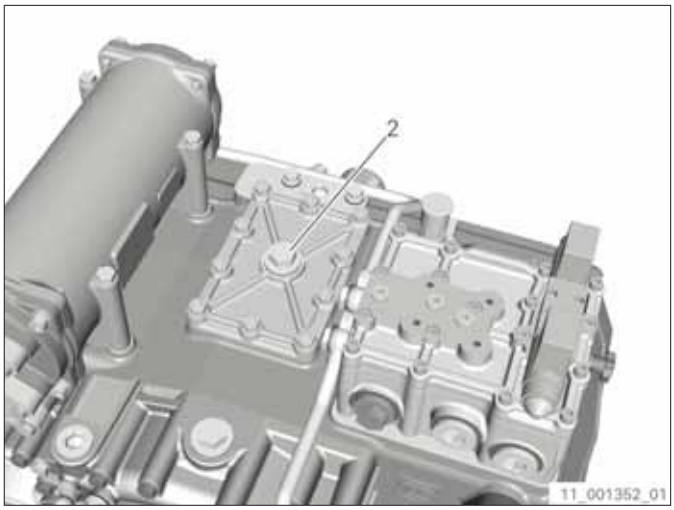

Fig. 246

- 28 dm^3 for transmission types ZF 3000 A, ZF 3050 A, ZF 3055 A, ZF 3060 A, ZF 3000 NRA, ZF 3050 NRA, ZF 3055 NRA, ZF 3060 NRA
- 31 dm^3 for transmission types ZF 3000, ZF 3050, ZF 3055, ZF 3060, ZF 3070, ZF 3000 NR, ZF 3050 NR, ZF 3055 NR, ZF 3060 NR, ZF 3070 NR, ZF 3070 A, ZF 3150 A, ZF 3160 A, ZF 3170 A, ZF 3070 NRA, ZF 3150 NRA, ZF 3160 NRA, ZF 3170 NRA, ZF 3000 V, ZF 3050 V, ZF 3000 NRV, ZF 3050 NRV, ZF 3055 V, ZF 3055 NRV, ZF 3060 V, ZF 3070 V, ZF 3060 NRV, ZF 3070 NRV, ZF 3050 D, ZF 3055 D, ZF 3060 D
- 31 dm^3 for transmission types ZF 3000 NC, ZF 3050 NC, ZF 3055 NC, ZF 3060 NC with counter-rotation direction
- 36 dm^3 for transmission types ZF 3310, ZF 3350, ZF 3355, ZF 3360, ZF 3370, ZF 3310 NR, ZF 3350 NRZF 3355 NR, ZF 3360 NR, ZF 3370 NR,
- 36 dm^3 for transmission types ZF 3310 NC, ZF 3350 NC, ZF 3355 NC, ZF 3360 NC with enginewise rotation direction
- 38 dm^3 for transmission types ZF 3311, ZF 3351, ZF 3356, ZF 3361, ZF W3310, ZF W3350, ZF W3355, ZF 3311 NR, ZF 3351 NR, ZF 3356 NR, ZF 3361 NR, ZF W3310 NR, ZF W3350 NR, ZF W3355 NR, ZF 3711, ZF 3751, ZF 3756, ZF 3761, ZF W3710, ZF W3750, ZF 3711 NR, ZF 3751 NR, ZF 3756 NR, ZF 3761 NR, ZF W3710 NR, ZF W3750 NR
- 38 dm^3 for transmission types ZF 3311 NC, ZF 3351 NC, ZF 3356 NC, ZF 3361 NC, ZF W3310 NC, ZF W3350 NC, ZF W3355 NC with counter-rotation direction
- 41 dm^3 for transmission types ZF W3755, ZF W3755 NR
- 38 dm^3 for transmission types ZF 3311, ZF 3351, ZF 3356, ZF 3361, ZF W3310, ZF W3350, ZF W3355, ZF 3311 NR, ZF 3351 NR, ZF 3356 NR, ZF 3361 NR,

ZF W3310 NR, ZF W3350 NR,
ZF W3355 NR with power take-in

- 38 dm^3 for transmission types ZF 3311, ZF 3351, ZF 3356, ZF 3361, ZF W3310, ZF W3350, ZF W3355, ZF 3311 NR, ZF 3351 NR, ZF 3356 NR, ZF 3361 NR, ZF W3310 NR, ZF W3350 NR, ZF W3355 NR with shaft brake

The oil quantity is specified on the type plate *(refer to section Transmission designation, page 184)*.

9. Fit and screw in filler plug (2) with new sealing ring.

10. Tighten filler plug (2).
Tightening torque: 115 Nm

11. Check oil level *(refer to section Checking the oil level, page 308)*.

The measurement with the oil dipstick (3) is decisive.

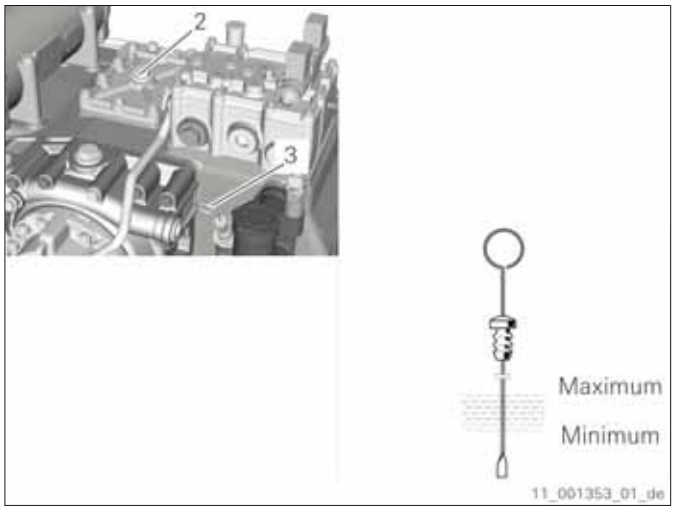

Fig. 247

9.14 Maintenance work 142: Replace filter cartridge and clean power take-in filter

	ZF 3000 family		
Maintenance work	Maintenance level	Carry out together with the maintenance work	Time in minutes
142	Z1, A3	141	60
Tools	Tool kit W1		
Parts	Filter cartridge, sealing rings		
Material	Oil pan, cleaning agent, lint-free cloth, lubricating oil		
Test equipment	---		
Location:	Date:		Page 1 of 11

Tab. 50 Maintenance work 142

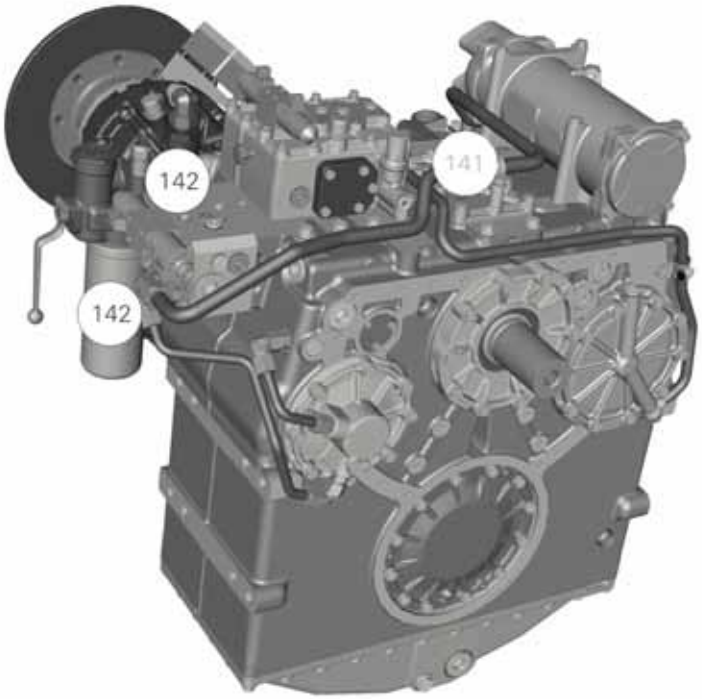

Fig. 248

9.14.1 Replacing the filter cartridge

Requirements:
- Engine is switched off.
- The engine starting mechanism is blocked.
- The oil temperature amounts to max. 40-50°C.

If possible, carry out this maintenance work together with maintenance work 141.

Observe additional information *(refer to section General safety instructions, page 13)*.

Removing the filter cartridge

1. After switching off the engine, wait 30 min. until the oil level has settled in the transmission.

2. Remove filter cartridge using an oil filter key and collect oil in a sufficiently large container.
   Do not reuse oil.

Installing the filter cartridge

3. Apply a thin coat of oil to the filter cartridge seal.

4. Before installing the new filter cartridge, check whether the designation corresponds with the removed filter cartridge.

5. Screw the filter cartridge to the filter head until they are in contact with each other.

6. Tighten filter cartridge by hand.

7. Check the filter for leaks.

9.14.2 Replacing the change-over filter's filter cartridge

Requirements:
- Engine is switched off.
- The engine starting mechanism is jammed.
- Oil temperature amounts to max. 40-50°C.
- New filter cartridge has been pre-filled with clean oil. In doing so, only use lubricant from the currently valid ZF List of Lubricants.

Only carry out this maintenance work at transmissions approved by a classification society.

If possible, carry out this maintenance work together with maintenance work 141.

Observe additional information *(refer to section General safety instructions, page 13)*.

Removing the filter cartridge

1. After switching off the engine, wait 30 min. until the oil level has settled in the transmission.

2. Slowly turn change lever (1) by 90° from position (A) to position (B).

   → Filter cartridge is out of operation
   → Protective filter is in operation

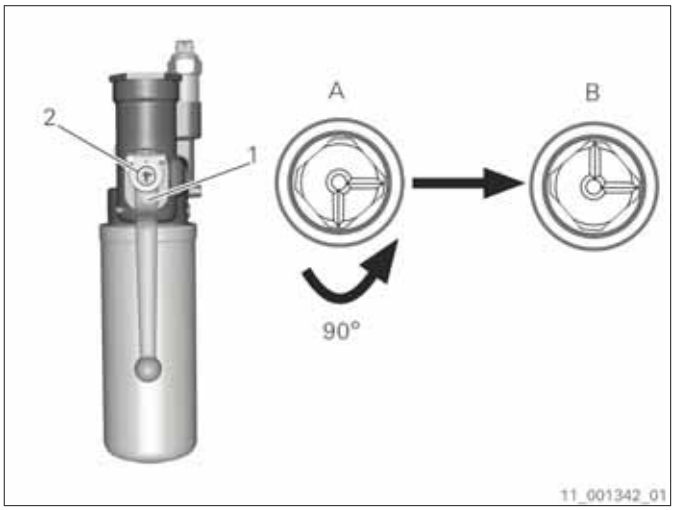

Fig. 249

A Filter cartridge in operation
B Protective filter in operation
1 switching lever
2 Change lever position indicator

3. Carefully loosen vent screw (3) by turning two rotations as the filter is under pressure.

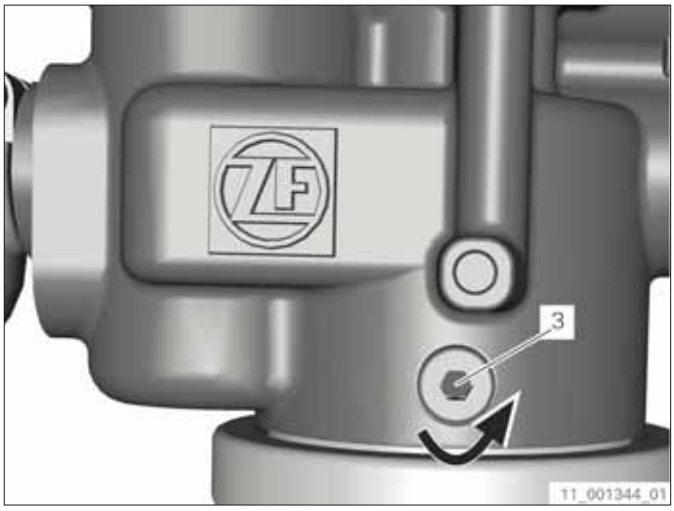

Fig. 250

4.

⚠ CAUTION

Risk of burns due to contact with hot oil.
Slight or moderate injury possible.

⇨ Wear protective goggles.
⇨ Wear protective gloves.

Remove filter cartridge (4) and collect oil in a suitably large container.

Do not reuse oil.

Fig. 251

Installing the filter cartridge

5. Apply a little bit of oil to the O-ring (5) of the new filter cartridge (4).

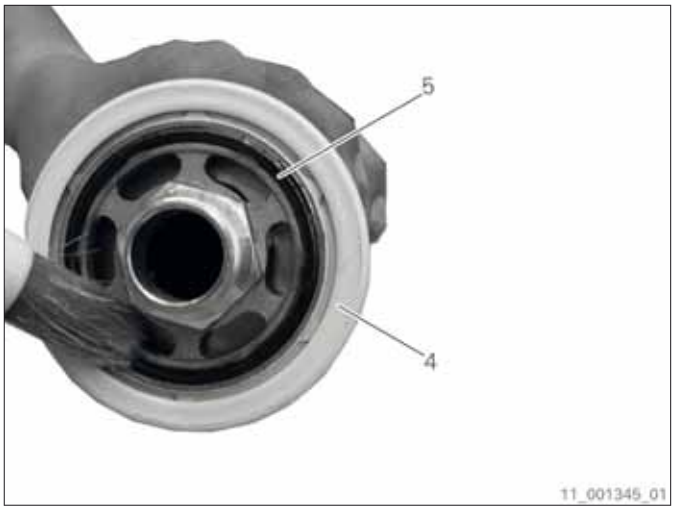

Fig. 252

6. Before installing the new filter cartridge (4), check whether the designation corresponds with the removed filter cartridge.

7. Screw the filter cartridge (4) to the filter head (6) until they are in contact with each other.

8. Tighten filter cartridge (4) by hand.

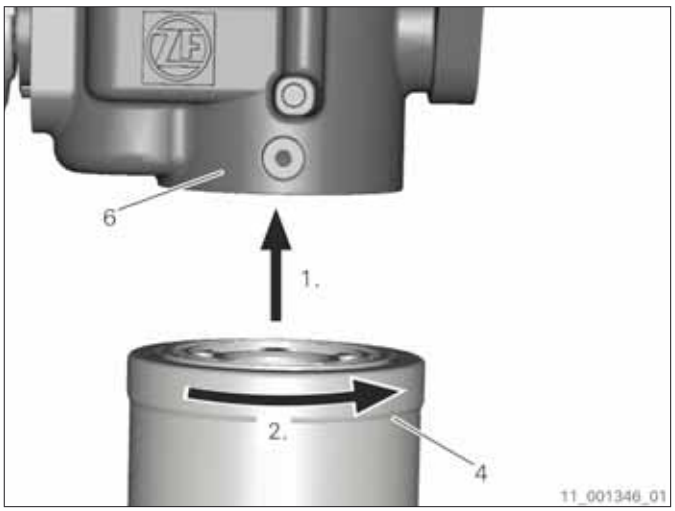

Fig. 253

9. Unlock engine starting mechanism.

10. Start the engine and, for lubrication purposes, allow the transmission to run in neutral shift position at an increased engine idle speed of max. 50% of the operating nominal speed.

11. Slowly turn change lever (1) by 90° from position (B) to position (A).

    → Filter cartridge is in operation
    → Protective filter is out of operation

12. Wait until medium emerges from the vent bore without bubbles.

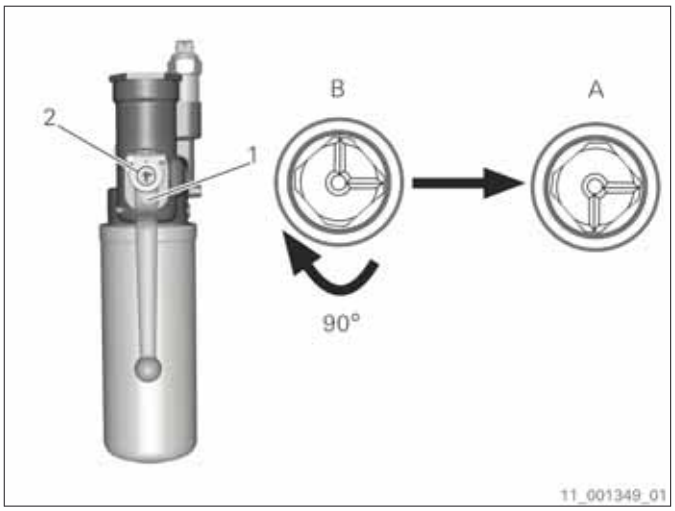

Fig. 254

A Filter cartridge in operation
B Protective filter in operation
1 switching lever
2 Change lever position indicator

13. Tighten vent screw (3).
    Tightening torque: 10 Nm

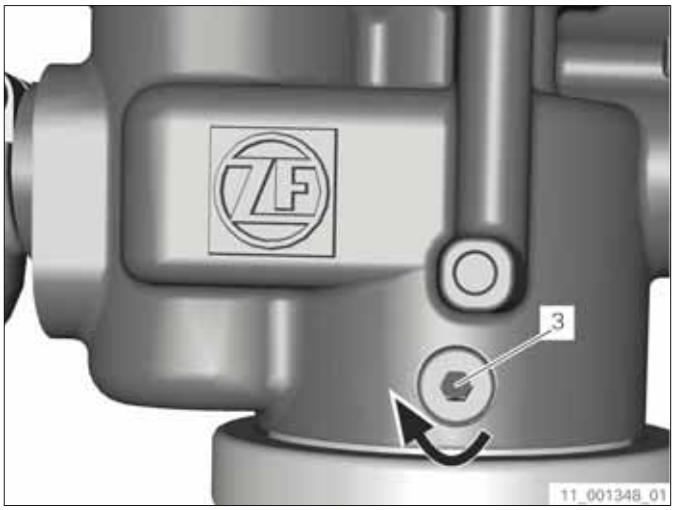

Fig. 255

14. Check the filter for leaks.

15. Switch off engine and block engine starting mechanism.

9.14.3 Cleaning the change-over filter protective filter

Requirements:
- Engine is switched off.
- The engine starting mechanism is jammed.
- Oil temperature amounts to max. 40-50°C.

Only carry out this maintenance work at transmissions approved by a classification society.

If possible, carry out this maintenance work together with maintenance work 141.

Observe additional information *(refer to section General safety instructions, page 13)*.

1. After switching off the engine, wait 30 min. until the oil level has settled in the transmission.

2. Lock screw (2) with nut (1).

   Completely loosen and remove nut (1) and screw (2).

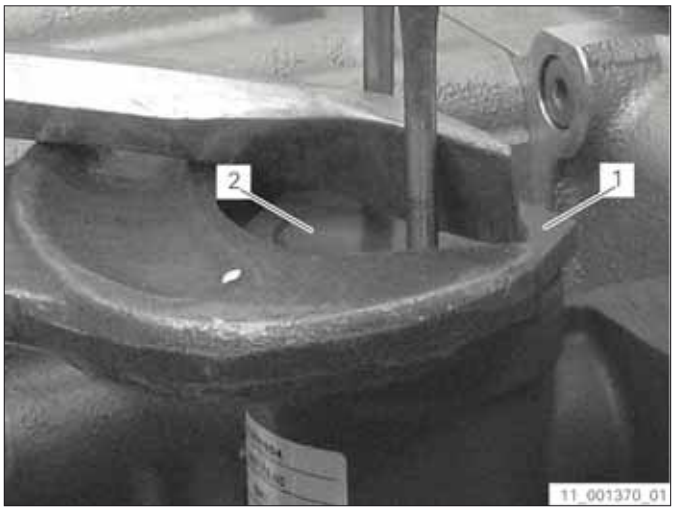

Fig. 256

3. Remove O-ring (3).

Fig. 257

4. Ensure that no dirt enters the clean oil chamber of the filter head (5).

Remove the protective filter (4) from the filter head (5) by pulling it upwards.

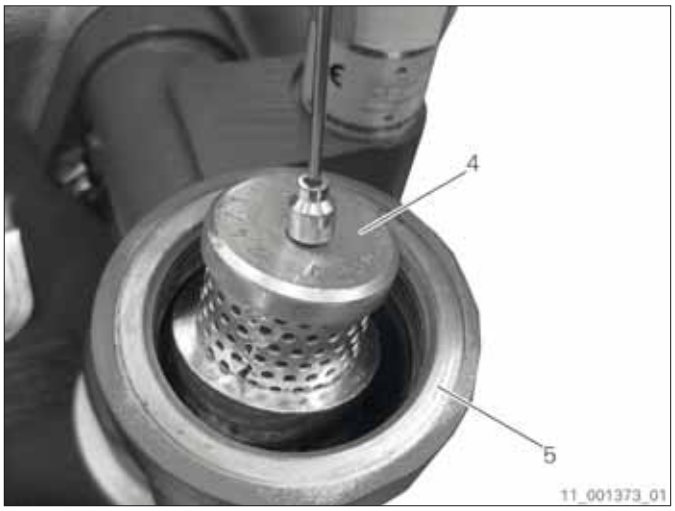

Fig. 258

5.

NOTICE

Property damage due to improper cleaning tool possible.

⇨ Use brush.

⇨ Use lint-free cloth.

Clean the protective filter (4) using benzine.

6. Insert the protective filter (4) into the filter head (5).

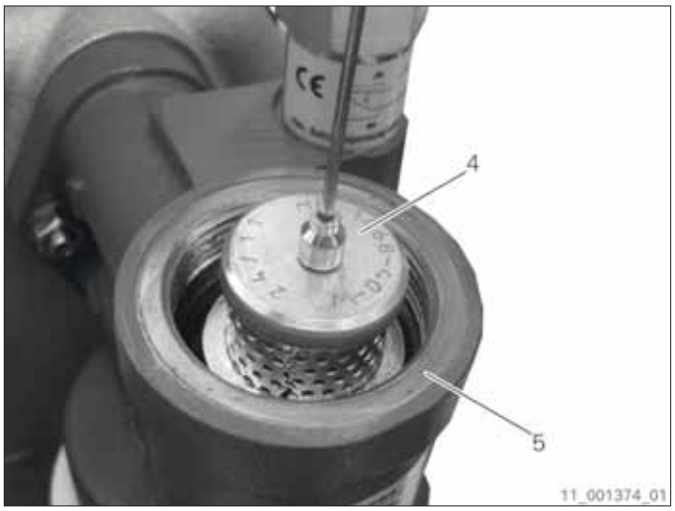

Fig. 259

7. Slide new O-ring (3) onto screw (2).

Fig. 260

8. Lock screw (2) with nut (1).

Screw in screw (2) as far as it will go.

9. Tighten nut (1).
Tightening torque: 150-250 Nm

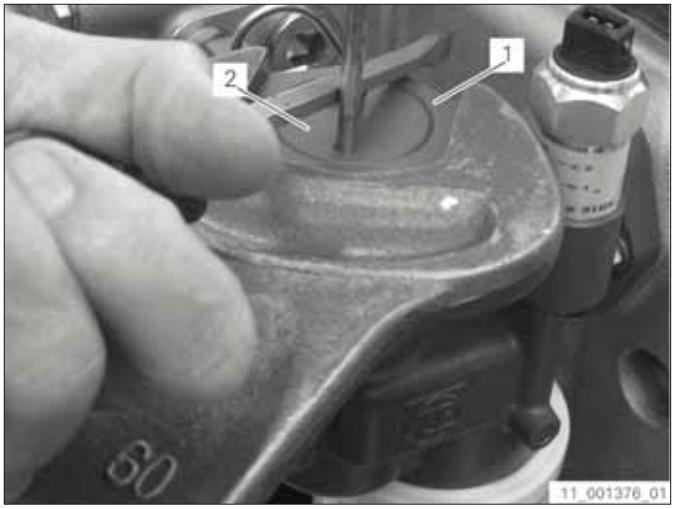

Fig. 261

9.14.4 Cleaning the power take-in filter

Requirements:
- Engine is switched off.
- The engine starting mechanism is jammed.
- Oil temperature amounts to max. 40-50°C.

If possible, carry out this maintenance work together with maintenance work 141.

Observe additional information *(refer to section General safety instructions, page 13)*.

Removing the filter

1. After switching off the engine, wait 30 min. until the oil level has settled in the transmission.

2. Put pan or drip plate underneath to collect oil.

3. **CAUTION**

   Risk of burns due to contact with hot oil.
   Slight or moderate injury possible.
   ⇨ Wear protective goggles.
   ⇨ Wear protective gloves.

   Completely loosen and remove threaded elbow joint (1) at filter (3).

4. Collect oil in a suitably large container.

5. Completely loosen and remove filter (3) at valve block (2).

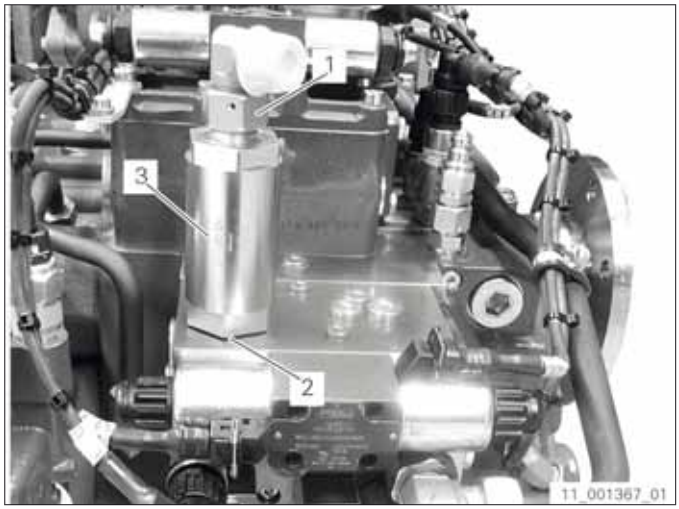

Fig. 262

Removing the filter element

6. Completely loosen filter element (4).

7. Take filter element (4) out of filter housing (5).

8. **⚠ CAUTION**

   Risk of burns due to contact with hot oil. Slight or moderate injury possible.
   ⇨ Wear protective goggles.
   ⇨ Wear protective gloves.

   Collect oil in a suitably large container.

9. Remove O-ring (6).

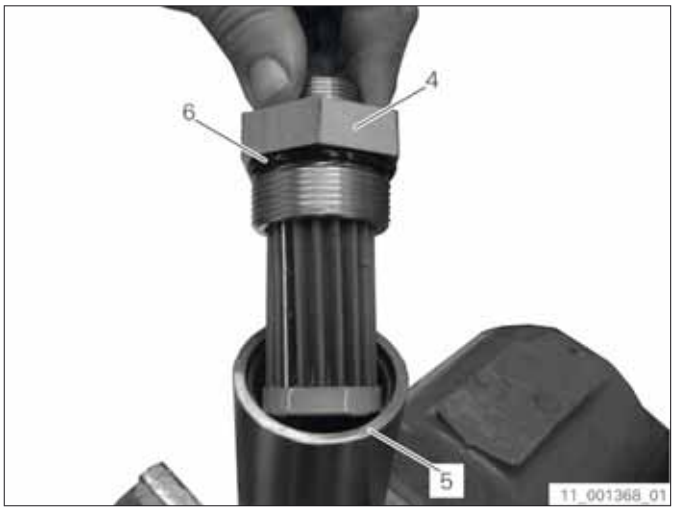

Fig. 263

10. ***NOTICE***

    Property damage due to improper cleaning tool possible.
    ⇨ Use brush.
    ⇨ Use lint-free cloth.

    Clean filter element (4) using diesel oil or benzine.

Fig. 264

Installing the filter element

11. Coat new O-ring (6) with clean oil and slide it onto filter element (4).

12. Insert filter element (4) into filter housing (5) and screw in as far as it will go.

13. Tighten filter element (4).
    Tightening torque: **360 Nm**

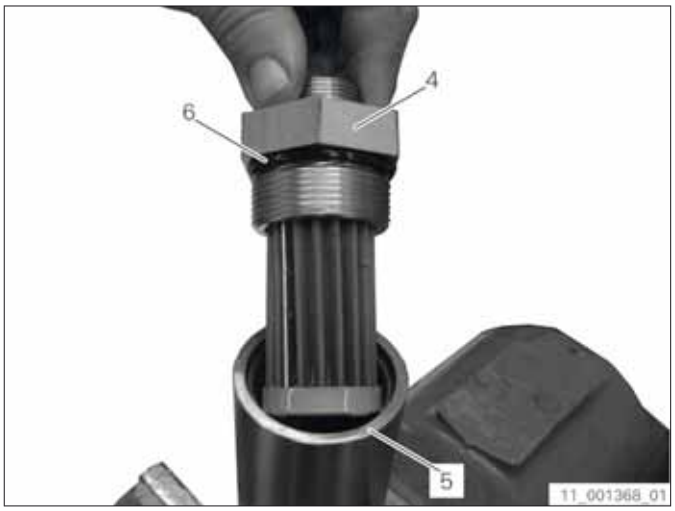

Fig. 265

Installing the filter

14. Screw filter (3) to valve block (2).

15. Screw threaded elbow joint (1) to filter (3).

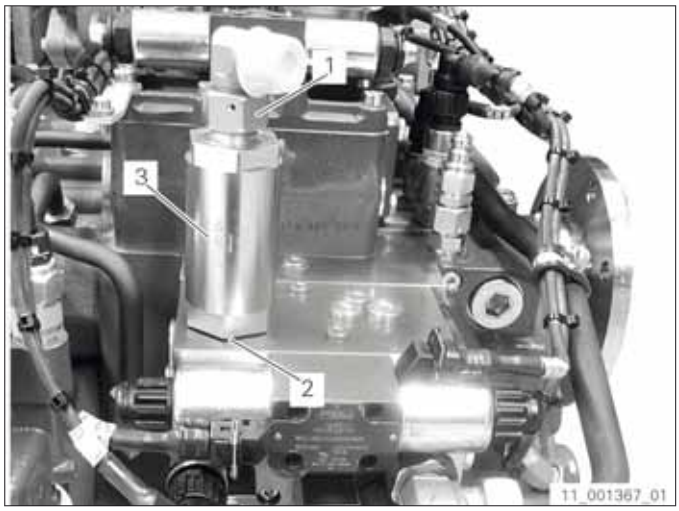

Fig. 266

9.15 Maintenance work 161: Conduct visual inspection at torsionally flexible coupling

	ZF 3000 family		
Maintenance work	Maintenance level	Carry out together with the maintenance work	Time in minutes
161	A2	---	15
Tools	Lighting products		
Parts	---		
Material	---		
Test equipment	---		
Location:	Date:		Page 1 of 2

Tab. 51 Maintenance work 161

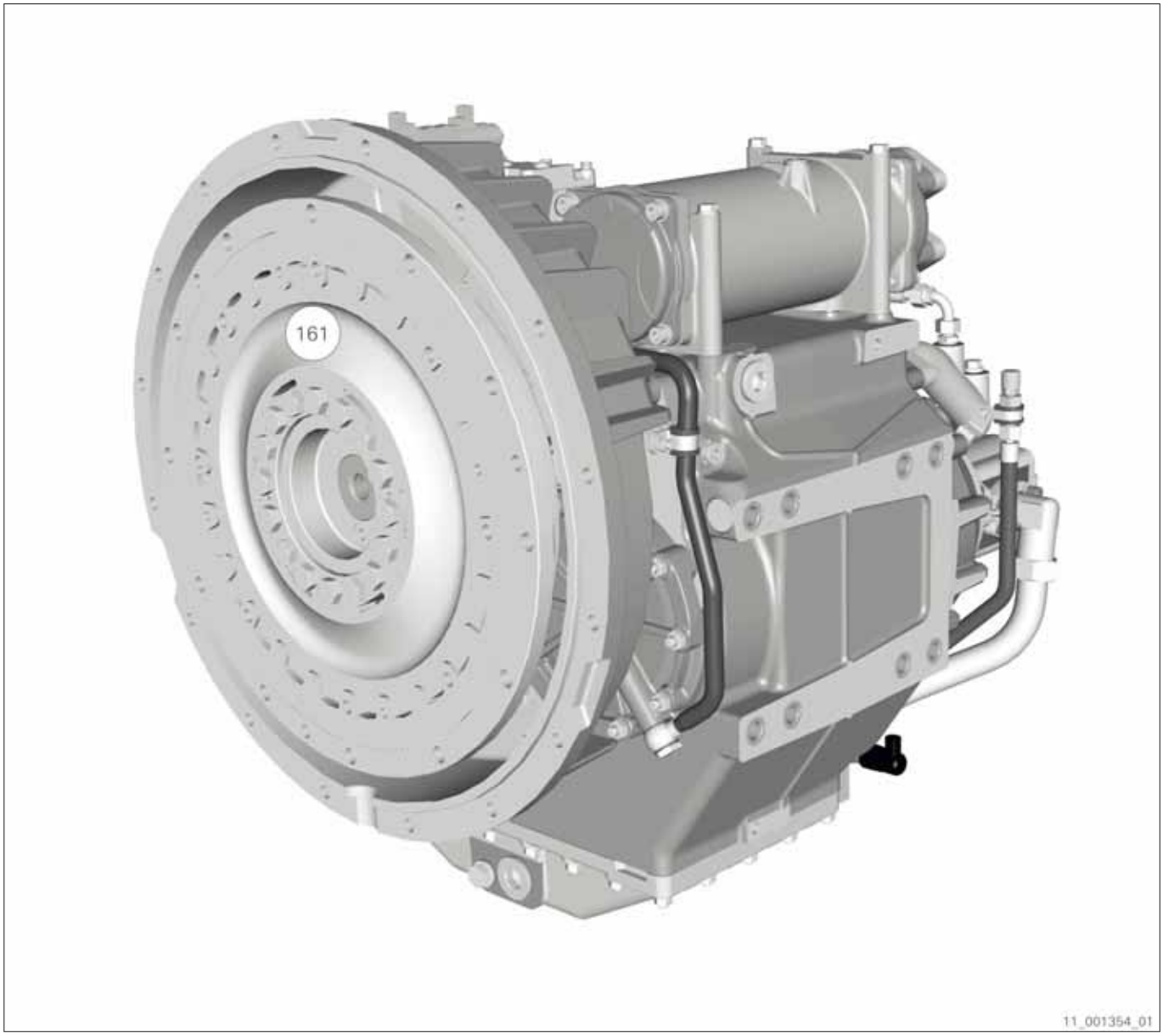

Fig. 267

9.15.1 Conducting visual inspection at torsionally flexible coupling

Requirements:

- The engine starting mechanism is jammed.

1. Check the torsionally flexible coupling's tire to make sure it is in flawless condition. To do so, slowly crank the engine and check elastomers via the inspection hole on the mounting bell.

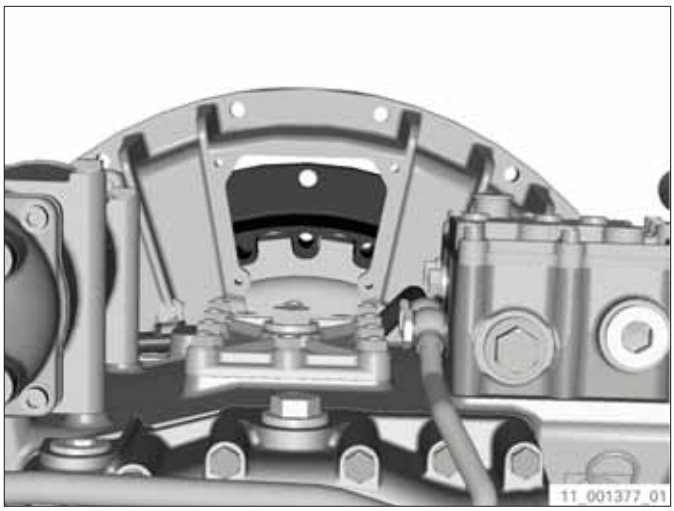

Fig. 268

2. Check elastic element of the clutch for cracks, brittleness and signs of overheating.

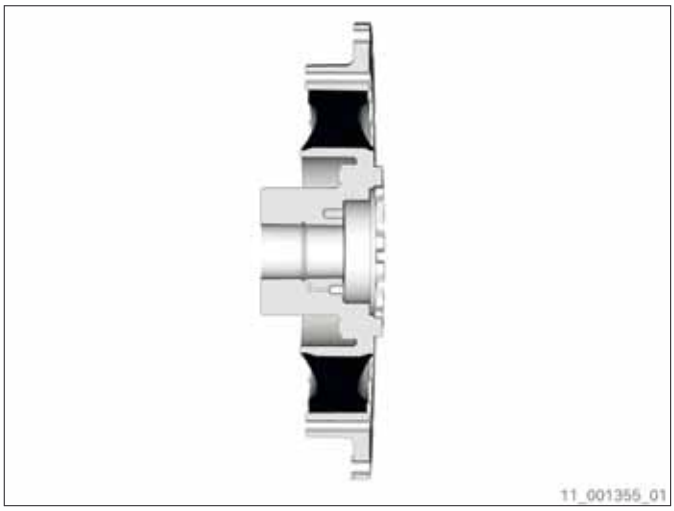

Fig. 269

9.16 Maintenance work 162: Conduct visual inspection at flexible transmission mounting and flexible engine mounting

	ZF 3000 family		
Maintenance work	Maintenance level	Carry out together with the maintenance work	Time in minutes
162	A4	---	15
Tools	Lighting products		
Parts	---		
Material	---		
Test equipment	---		
Location:	Date:		Page 1 of 2

Tab. 52 Maintenance work 162

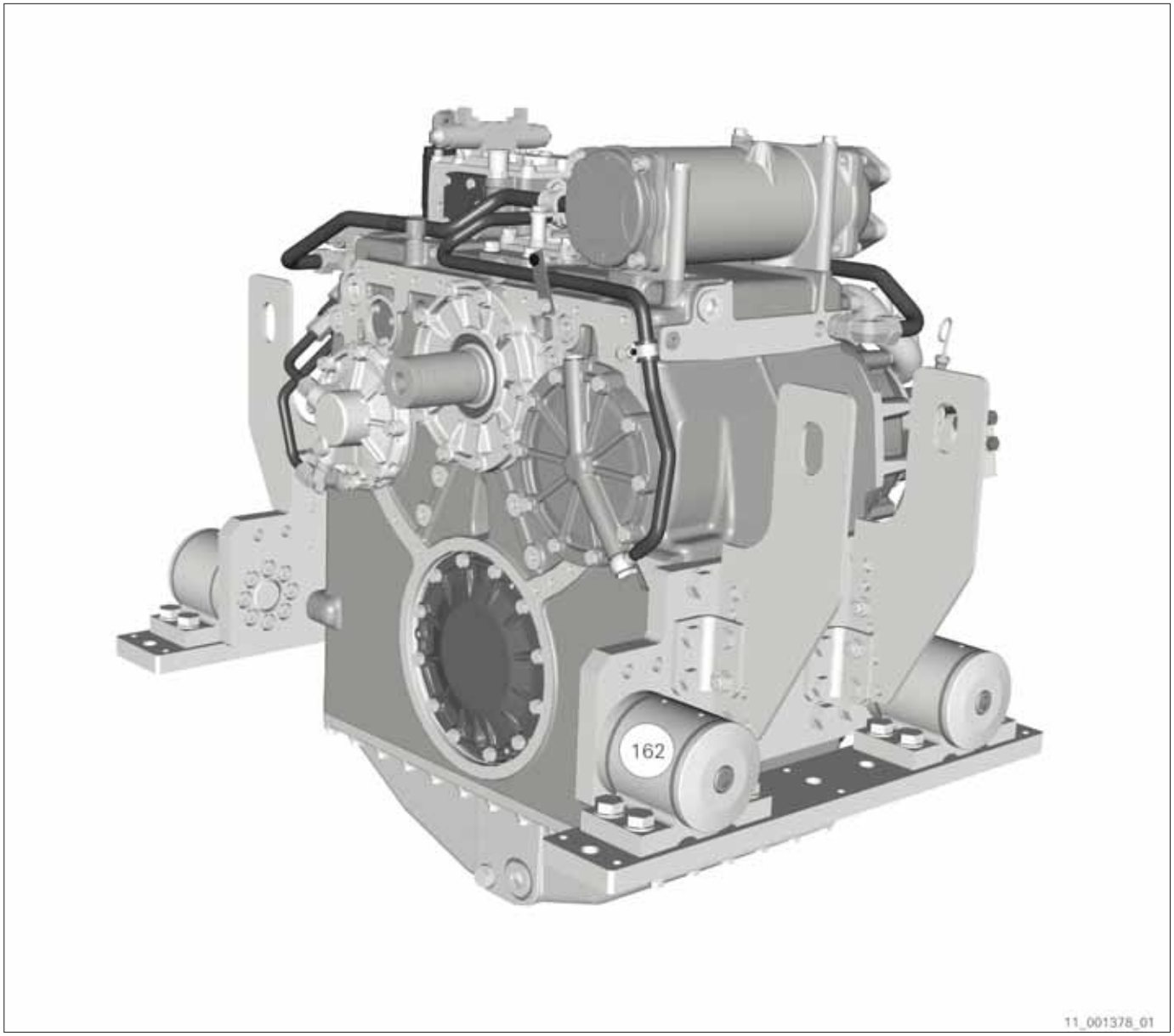

Fig. 270

9.16.1 Conducting visual inspection at flexible transmission mounting and flexible engine mounting

Requirements:

- The engine starting mechanism is jammed.

1. Check rubber-to-metal mountings on the engine and the transmission to make sure they are in flawless condition.

   The flexible parts may show no signs of cracks, brittleness or other damage.

9.17 Maintenance work 163: Conduct visual inspection at clutch disks

	ZF 3000 family		
Maintenance work	Maintenance level	Carry out together with the maintenance work	Time in minutes
163	A4	164	15
Tools	Tool kit W1, lighting products		
Parts	Seal		
Material	Cleaning agent, lint-free cloth		
Test equipment	---		
Location:	Date:		Page 1 of 3

Tab. 53 Maintenance work 163

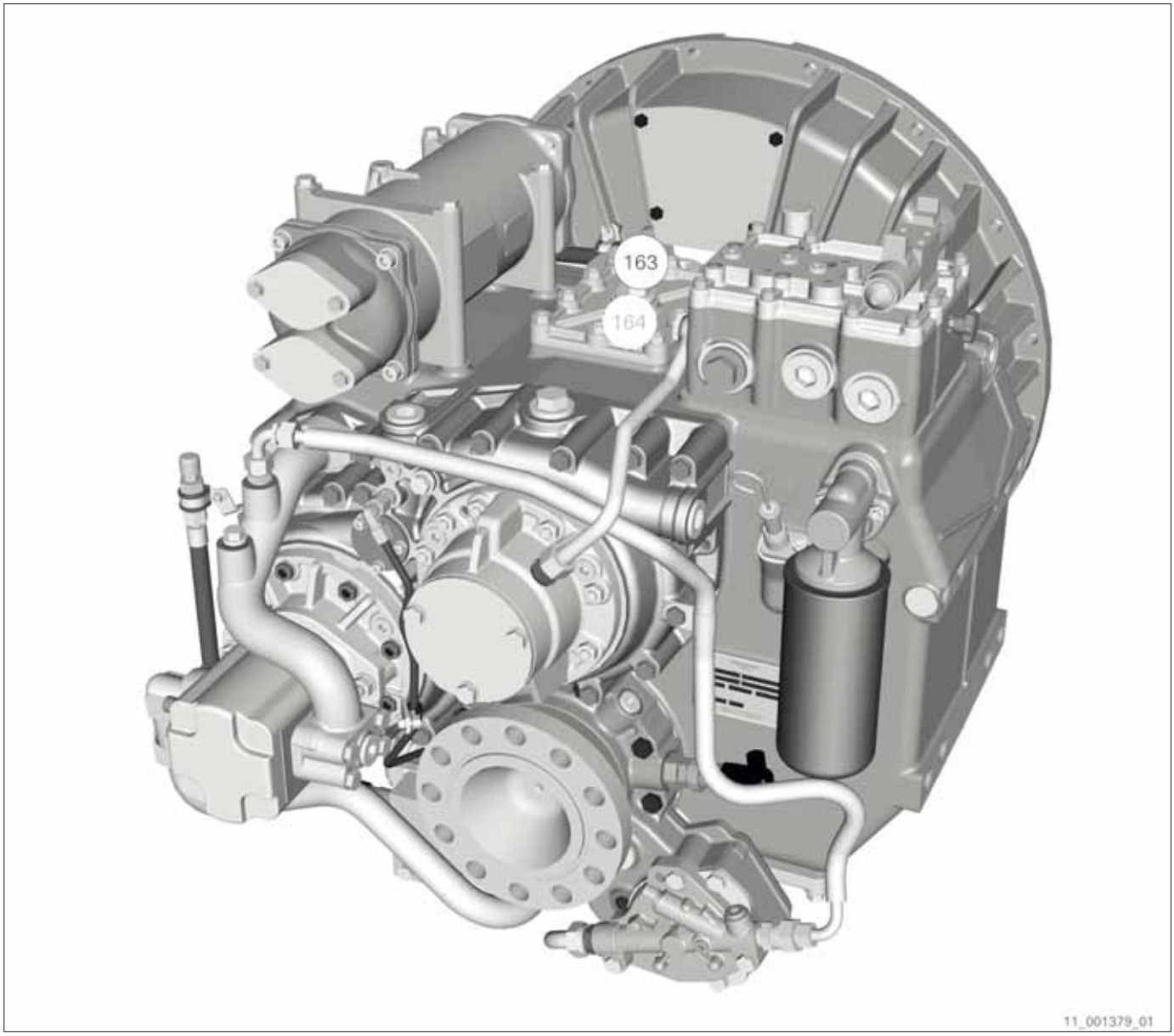

Fig. 271

9.17.1 Conducting visual inspection at clutch disks

Requirements:

- The engine starting mechanism is jammed.

If possible, carry out this maintenance work together with maintenance work 164.

1. **NOTICE**

   Property damage caused by a falling part possible.

   ⇨ Secure the part against falling.

   Remove inspection cover (1) and pay attention that no parts fall into the transmission housing.

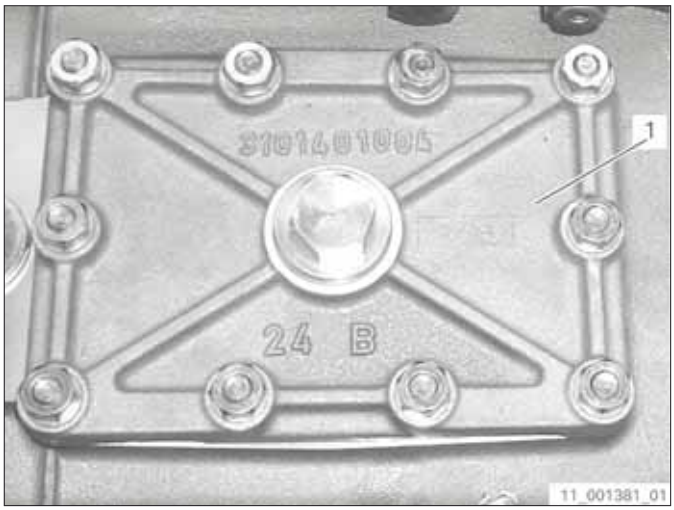

Fig. 272

2. Remove seal and check multidisk clutch (2) for signs of overheating.

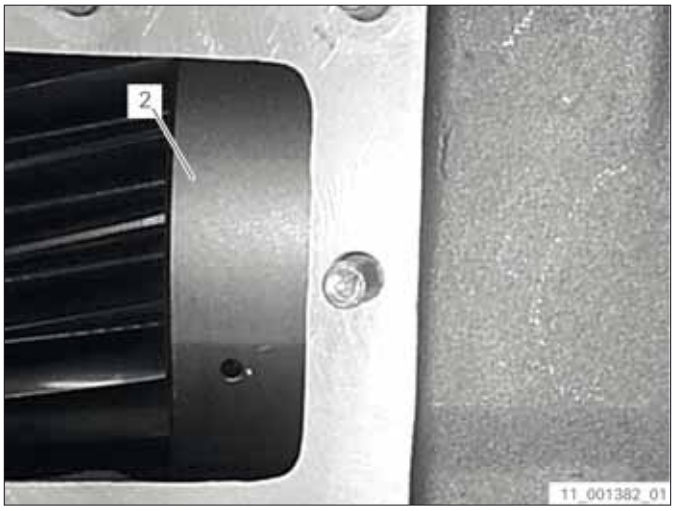

Fig. 273

3. Install inspection cover (1) together with new seal.

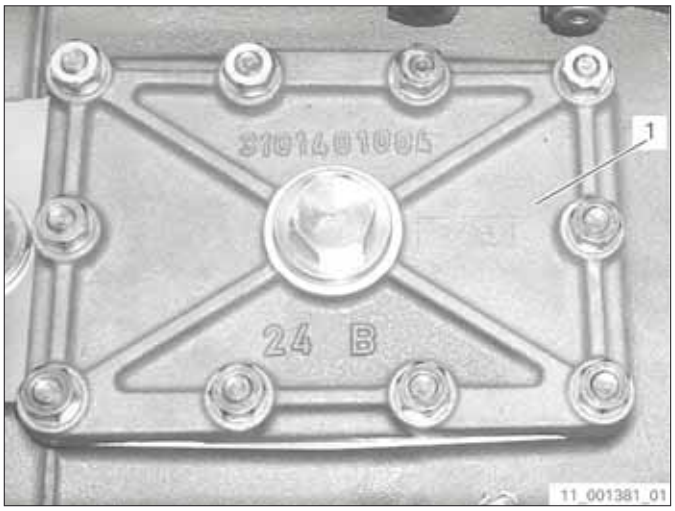

Fig. 274

9.18 Maintenance work 164: Conduct visual inspection at running gearing

	ZF 3000 family		
Maintenance work	Maintenance level	Carry out together with the maintenance work	Time in minutes
164	A4	163	15
Tools	Tool kit W1, lighting products		
Parts	Seal		
Material	Cleaning agent, lint-free cloth		
Test equipment	---		
Location:	Date:		Page 1 of 3

Tab. 54 Maintenance work 164

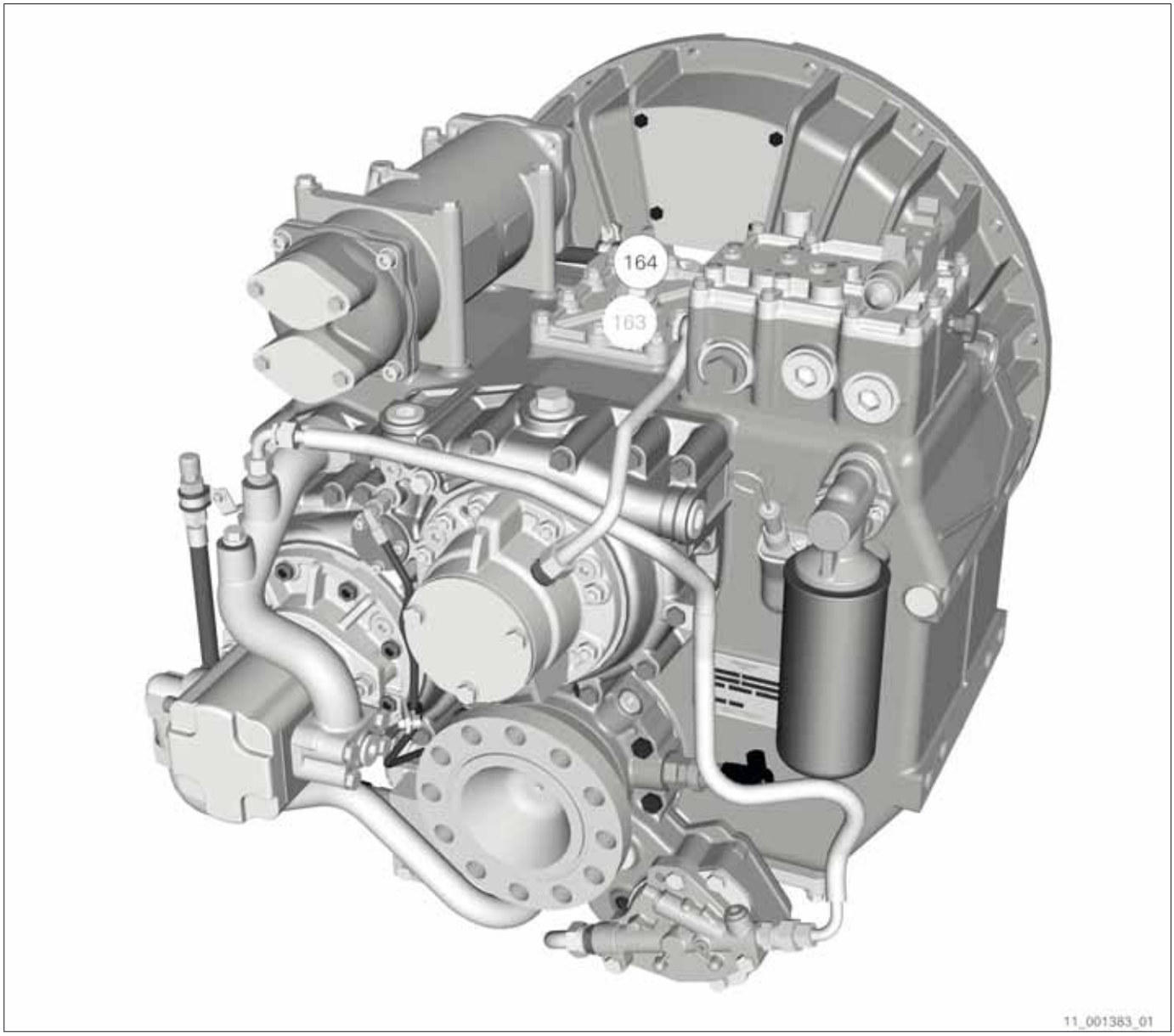

Fig. 275

9.18.1 Conducting visual inspection at running gearing

Requirements:

- The engine starting mechanism is jammed.

If possible, carry out this maintenance work together with maintenance work 163.

1. **NOTICE**

   Property damage caused by a falling part possible.

   ⇨ Secure the part against falling.

   Remove inspection cover (1) and pay attention that no parts fall into the transmission housing.

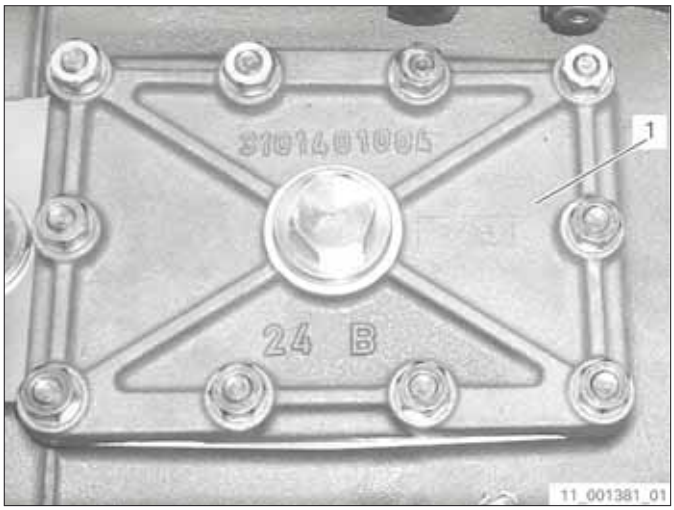

Fig. 276

2. Remove seal and check the gearings of the gears (2) on the input shaft, intermediate shaft and output shaft.

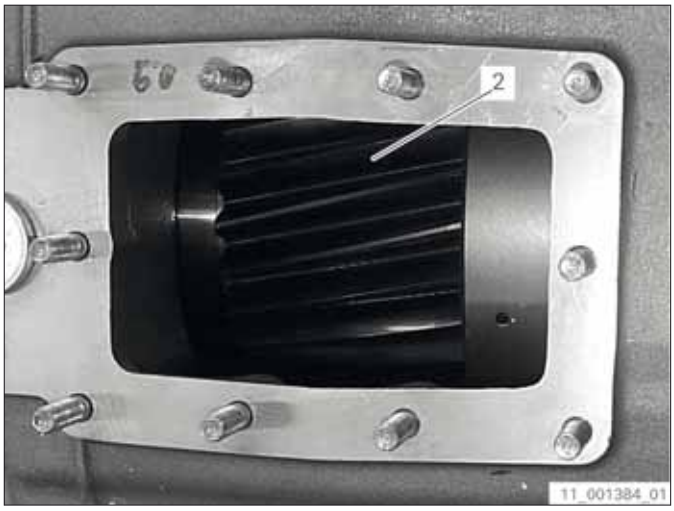

Fig. 277

3. Check the tooth flanks for wear.

   No pitting or other signs of wear may occur on the tooth flank.

Fig. 278

4. Install inspection cover (1) together with new seal.

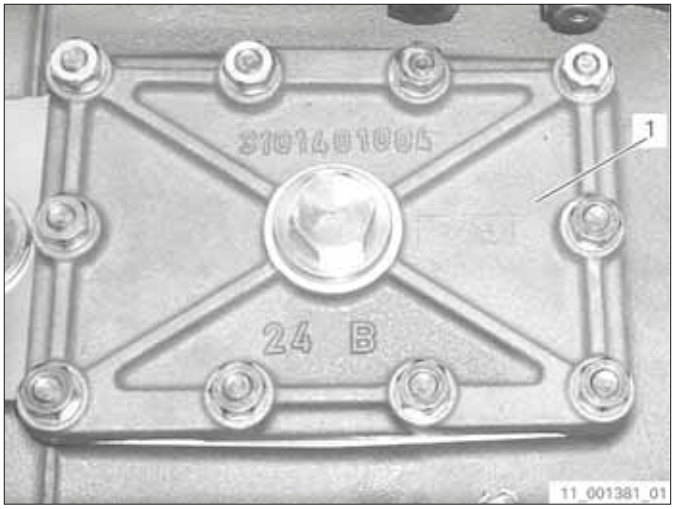

Fig. 279

9.19 Maintenance work 165: Check oil pumps

	ZF 3000 family		
Maintenance work	Maintenance level	Carry out together with the maintenance work	Time in minutes
165	A4	---	180
Tools	Tool kit W1		
Parts	Seal kit		
Material	Oil pan, cleaning agent, lint-free cloth, lubricating oil		
Test equipment	---		
Location:	Date:		Page 1 of 15

Tab. 55 Maintenance work 165

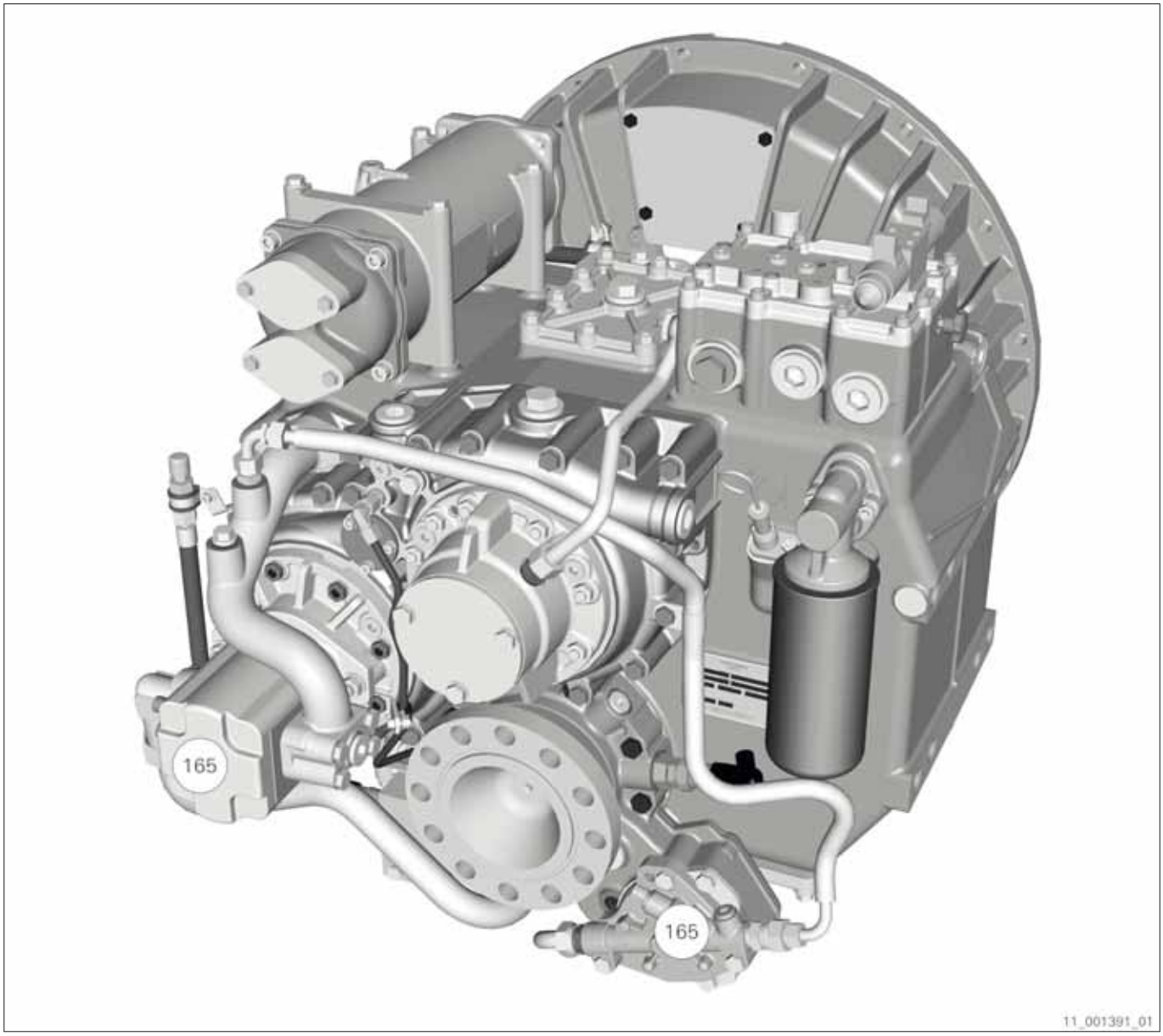

Fig. 280

9.19.1 Maintenance

The gear pumps require only a limited amount of maintenance, which is, however, indispensable for fault-free operation. Faulty maintenance and dirt cause a high percentage of the damage and faults that occur.

Regularly checking all operating data such as filter contamination level, pressure, temperature, etc. contributes to the early detection of faults.

The oil pump is a complete part and is usually not disassembled. Testing or cleaning can, however, require disassembling the oil pump.

The engine-dependent oil pump is part of the standard ZF scope of supply.

The trailing pump is part of the ZF extra equipment.

9.19.2 Actions required during oil pump removal

Observe when removing the oil pumps:

- Pay attention to cleanliness.
- The lines must be depressurized prior to removal.
- Collect and dispose of escaped oil to prevent risks to people and the environment.
- Close off pump connections and tubing to prevent dirt penetration.
- Use lint-free cloths to clean pump parts.

9.19.3 Commissioning the oil pumps

Before the drive system is started, a sufficient amount of transmission oil must be present in order to prevent a dry run.

9.19.4 Determining the direction of rotation

The following specification applies to the rotation direction of the oil pump:

Viewed from the pump shaft end, the direction of flow is from left to right when the shaft rotates clockwise.

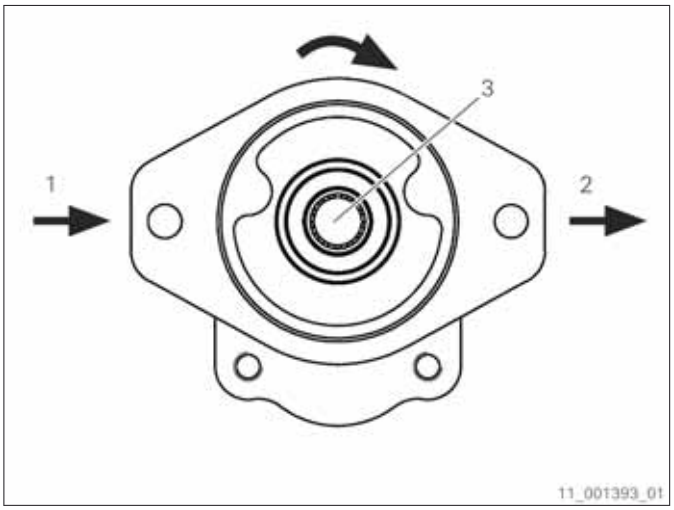

Fig. 281

1 Suction side
2 Pressure side
3 Pump shaft end

Viewed from the pump shaft end, the direction of flow is from right to left when the shaft rotates counterclockwise.

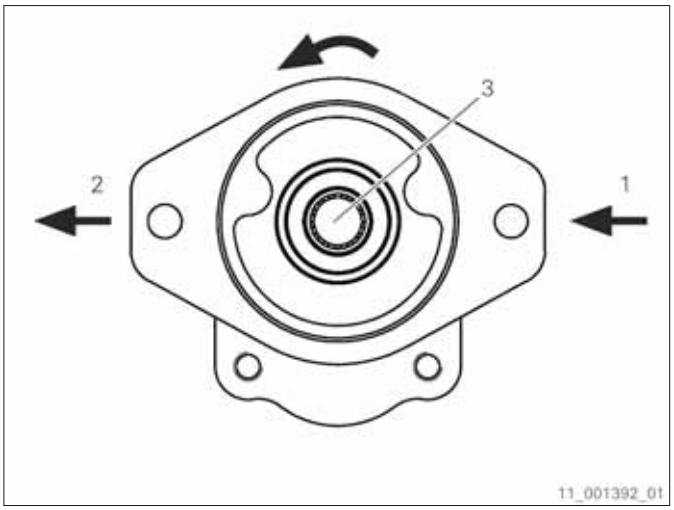

Fig. 282

1 Suction side
2 Pressure side
3 Pump shaft end

9.19.5 Design of the oil pump

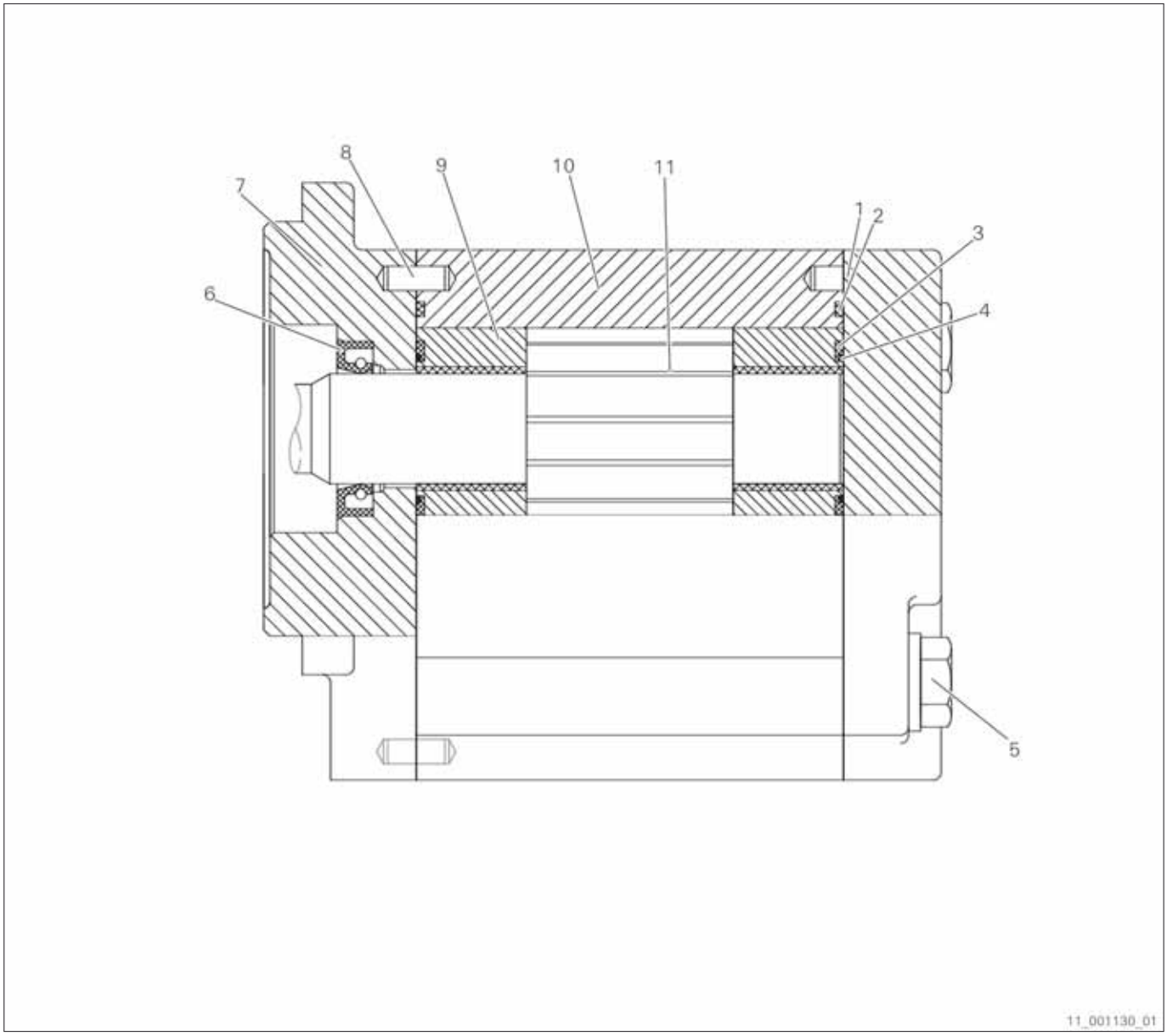

Fig. 283

1 Cover
2 Sealing element
3 Support ring
4 Rubber pressure field sealing
5 Screw
6 Shaft sealing ring
7 fastening plate
8 Cylindrical pin
9 Bearing plate
10 housing
11 gearset

9.19.6 Removing and cleaning the engine-dependent oil pump

Requirements:

- The engine starting mechanism is blocked.

Disassembling the oil pump

1. Only perform this work step for transmissions belonging to the ZF 3300 family and ZF 3700 family.

   Remove anchorage of suction line.

2. Remove suction line together with threaded elbow joint from oil pump.

3. Remove suction line from housing.

4. Remove fittings from oil pump and intermediate flange.

5. Remove intermediate flange.

6. Remove O-rings from fittings and intermediate flange.

7. Remove nuts from the oil pump and take off the oil pump from the pump flange.

8. Mark the position of the pump parts.

9. Remove screws (5) from the cover (1) and disassemble the oil pump.

Cleaning and inspecting the oil pump

10. Thoroughly clean parts.

11. Check the bearing plate (9) for running-in wear.

12. Check the gear set (11) for wear and indentation.

13. Apply a thin coat of oil to moving parts.

Reassembling the oil pump

14. Press new shaft sealing ring (6) from the front of the locating collar into the fastening plate (7) down to its ground.

15. Attach housing (10) to fastening plate (7).

16. Insert support ring (3) and rubber pressure field sealing (4) into the first bearing plate (9).

17. Install bearing plate (9) in such a manner that the axial pressure field points towards the delivery side.

18. Install gear set (11).

19. Insert support ring (3) and rubber pressure field sealing (4) into the second bearing plate (9).

20. Install bearing plate (9) in such a manner that the axial pressure field points towards the delivery side.

21. Insert sealing element (2) into the housing (10).

22. Fit cover (1) to the housing (10) using screws (5).

23. Tighten screws (5) crosswise.
    Tightening torque: 46 Nm

24. Spin the oil pump by hand.

25. Insert new O-ring into pump flange.

26. Put oil pump into pump flange and attach to pump flange using nuts.

27. Tighten nuts.
    Tightening torque: 79 Nm

28. Insert new O-rings into fittings.

29. Pin fittings to oil pump using screws.

30. Insert new O-ring into intermediate flange.

31. Pin fittings and intermediate flange to housing using screws.

32. Fit suction line to transmission housing.

33. Pin suction line together with threaded elbow joint to oil pump using screws.

34. Screw down suction line on the housing.

35. Tighten screws of threaded elbow joint on oil pump crosswise.
    Tightening torque: 46 Nm

36. Tighten fitting screws and intermediate flange screws at the housing.
    Tightening torque: 46 Nm

37. Tighten fitting screws crosswise at oil pump.
    Tightening torque: 46 Nm

38. Only perform this work step for transmissions belonging to the ZF 3300 family and ZF 3700 family.

Fit and tighten anchorage of suction line.
Tightening torque: 23 Nm

9.19.7 Removing and cleaning the engine-dependent oil pump

Requirements:

- The engine starting mechanism is blocked.

Perform the following work steps only for transmissions of ZF 3300 family with power take-in.

Disassembling the oil pump

1. Remove anchorage of suction line.
2. Remove suction line together with fittings from oil pump.
3. Remove suction line from housing.
4. Remove O-ring from fittings.
5. Remove fittings from oil pump and intermediate flange.
6. Remove intermediate flange.
7. Remove O-rings from fittings and intermediate flange.
8. Remove nuts from the oil pump and take off the oil pump from the pump flange.
9. Mark the position of the pump parts.
10. Remove screws (5) from the cover (1) and disassemble the oil pump.

Cleaning and inspecting the oil pump

11. Thoroughly clean parts.
12. Check the bearing plate (9) for running-in wear.
13. Check the gear set (11) for wear and indentation.
14. Apply a thin coat of oil to moving parts.

Reassembling the oil pump

15. Press new shaft sealing ring (6) from the front of the locating collar into the fastening plate (7) down to its ground.
16. Attach housing (10) to fastening plate (7).
17. Insert support ring (3) and rubber pressure field sealing (4) into the first bearing plate (9).
18. Install bearing plate (9) in such a manner that the axial pressure field points towards the delivery side.

19. Install gear set (11).

20. Insert support ring (3) and rubber pressure field sealing (4) into the second bearing plate (9).

21. Install bearing plate (9) in such a manner that the axial pressure field points towards the delivery side.

22. Insert sealing element (2) into the housing (10).

23. Fit cover (1) to the housing (10) using screws (5).

24. Tighten screws (5) crosswise.
    Tightening torque: 46 Nm

25. Spin the oil pump by hand.

26. Insert new O-ring into pump flange.

27. Put oil pump into pump flange and attach to pump flange using nuts.

28. Tighten nuts.
    Tightening torque: 79 Nm

29. Insert new O-rings into fittings.

30. Pin fittings to oil pump using screws.

31. Insert new O-ring into intermediate flange.

32. Pin fittings and intermediate flange to housing using screws.

33. Insert new O-ring into fittings.

34. Fit suction line to transmission housing.

35. Pin suction line together with fittings to oil pump using screws.

36. Screw down suction line on the housing.

37. Tighten fitting screws crosswise at oil pump.
    Tightening torque: 46 Nm

38. Tighten fitting screws and intermediate flange screws at the housing.
    Tightening torque: 46 Nm

39. Tighten fitting screws crosswise at oil pump.
    Tightening torque: 79 Nm

40. Fit and tighten anchorage of suction line.

Tightening torque: 23 Nm

9.19.8 Trailing pump

9.19.8.1 Design and axial clearance

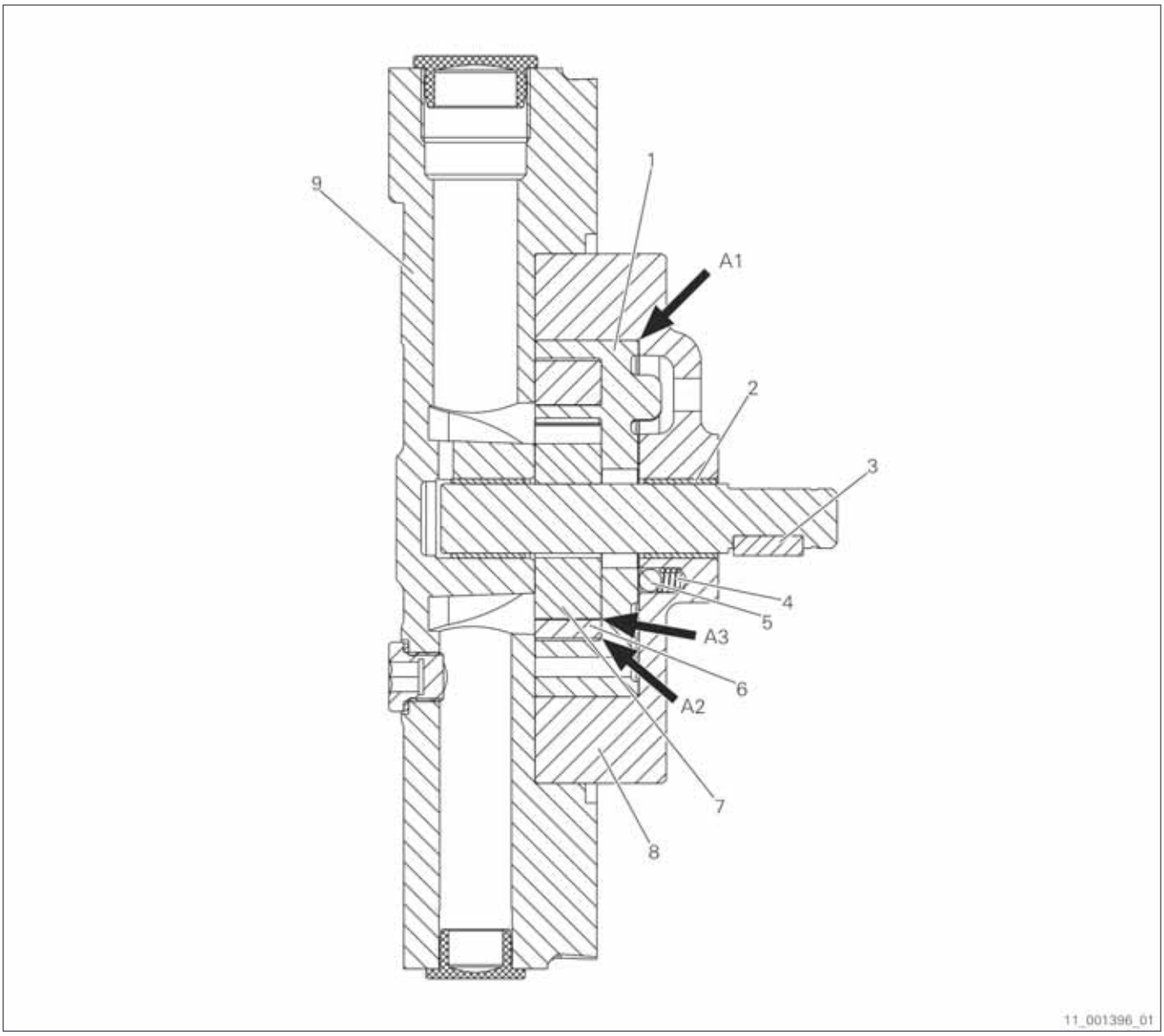

Fig. 284

1 Reversing housing
2 Bearing bush
3 Parallel key
4 Compression spring
5 Steel ball
6 Internal rotor
7 External rotor
8 Cover
9 Housing
A1 Axial clearance between reversing housing and cover, 0.10 mm to 0.20 mm
A2 Axial clearance between external rotor and reversing housing, 0.02 mm to 0.08 mm
A3 Axial clearance between internal rotor and reversing housing, 0.025 mm to 0.075 mm

9.19.8.2 Removing and cleaning the trailing pump

Requirements:

- The engine starting mechanism is jammed.

Dismantling the trailing pump

1. Remove suction line and pressure line.

2. Unfasten screws (11, 12) and take off trailing pump .

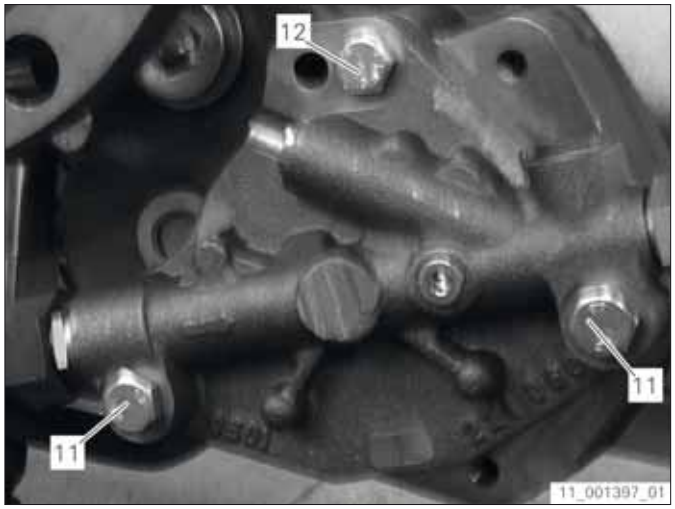

Fig. 285

3. Remove O-ring (13).

4. Disengage securing ring (14).

5. Pull off drive pinion (15).

6. Take out parallel key (3).

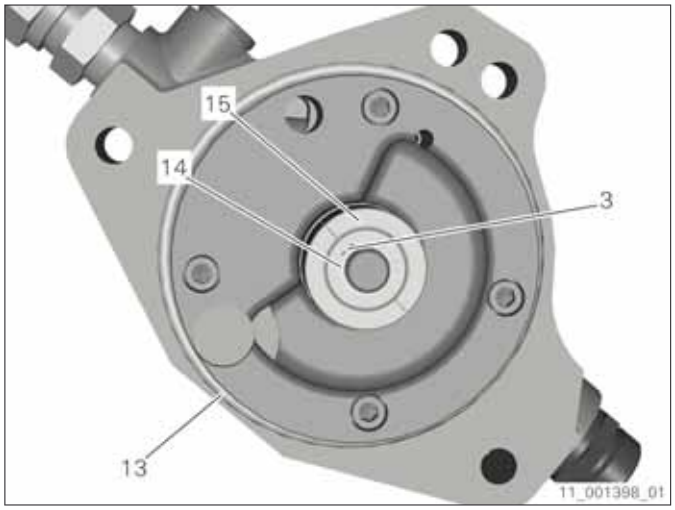

Fig. 286

7. Loosen screws (10) at cover (8) and remove housing (9).

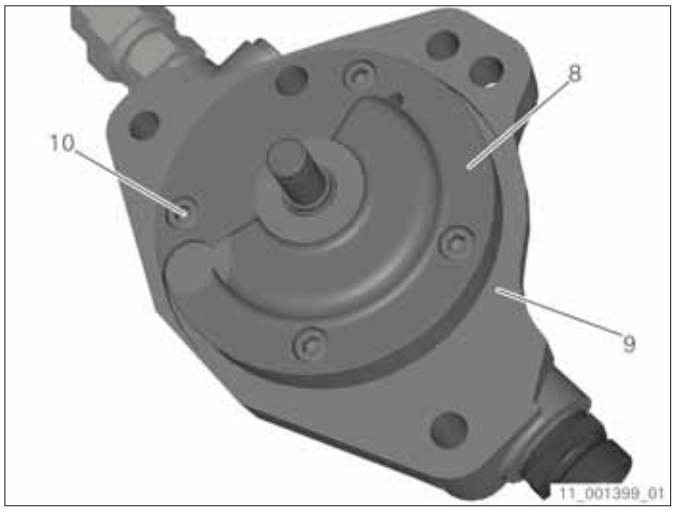

Fig. 287

8. Dismantle trailing pump.

Cleaning and checking the trailing pump

9. Thoroughly clean parts.

10. Check internal rotor (6) for wear.

11. Check external rotor (7) for wear.

12. Check reversing housing (1) for wear.

13. Check bearing bushes (2) for wear.

14. Apply a thin coat of oil to moving parts.

Assembling the trailing pump

15. Insert compression springs (4) into cover (8).

16. Fill compression springs (4) with grease so that steel balls (5) keep their position.

17. Insert steel balls (5) into cover (8).

18. Insert reversing housing (1) into cover (8).

19. Insert internal rotor (6) into cover (8).

20. Insert external rotor (7) into reversing housing (1).

21. Measure axial clearance A1, A2 and A3 *(refer to section Trailing pump, page 357)*.

22. Put housing (9) on the cover (8).

23. Screw in and tighten screws (10) at cover (8).
Tightening torque: 8 Nm (±10%)

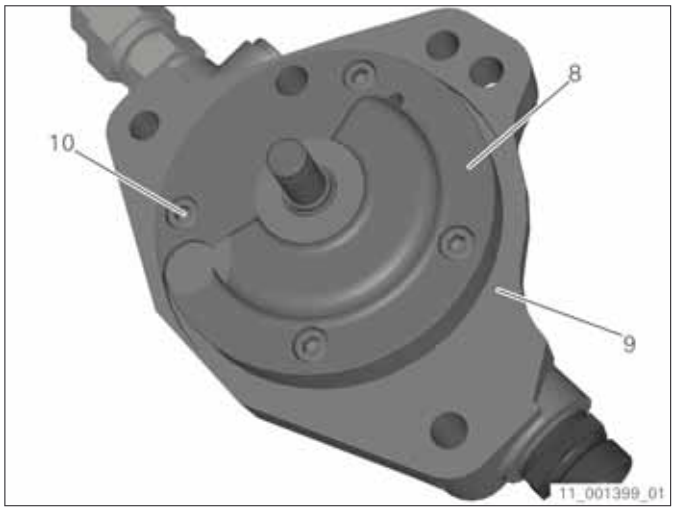

Fig. 288

24. Slide parallel key (3) onto pump shaft.

25. **⚠ CAUTION**

Risk of burn injuries due to contact with hot surfaces.
Slight or moderate injury possible.
⇨ Wear protective gloves.

Heat drive pinion (15) to 85°C and slide onto pump shaft.

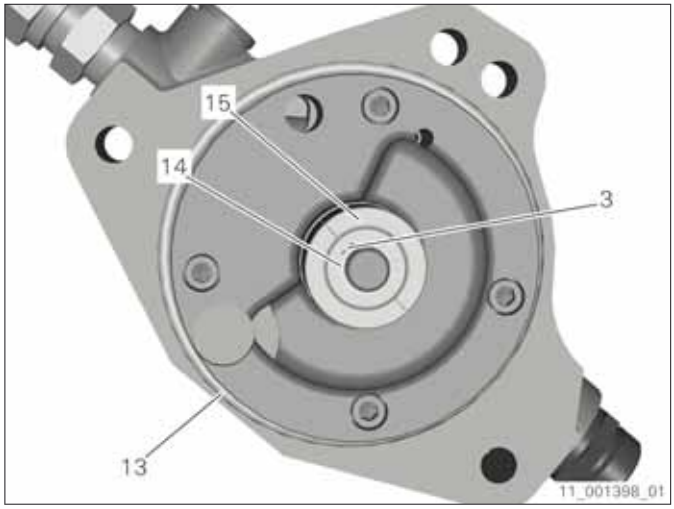

Fig. 289

26. Fit securing ring (14) in radial groove of pump shaft.

27. Fit O-ring (13).

28. Attach trailing pump to cover using screws (11, 12).

29. Tighten screws (11, 12).
Tightening torque: 46 Nm

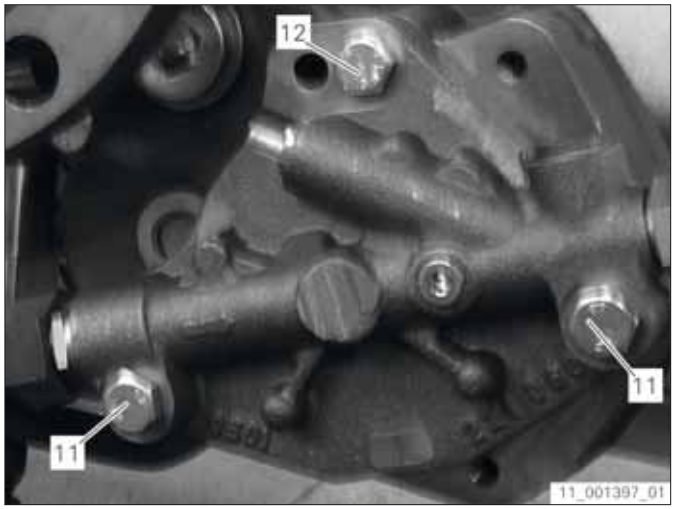

Fig. 290

30. Fit suction line and pressure line.

9.20 Maintenance work 166: Check control unit and valve block of power take-in and shaft brake

	ZF 3000 family		
Maintenance work	Maintenance level	Carry out together with maintenance work	Time in minutes
166	A4	167	120
Tooling	Tool kit W1		
Parts	Seal kit		
Material	Oil pan, cleaning agent, lint-free cloth, lubricating oil		
Testing equipment	---		
Location:	Date:		Page 1 of 9

Tab. 56 Maintenance work 166

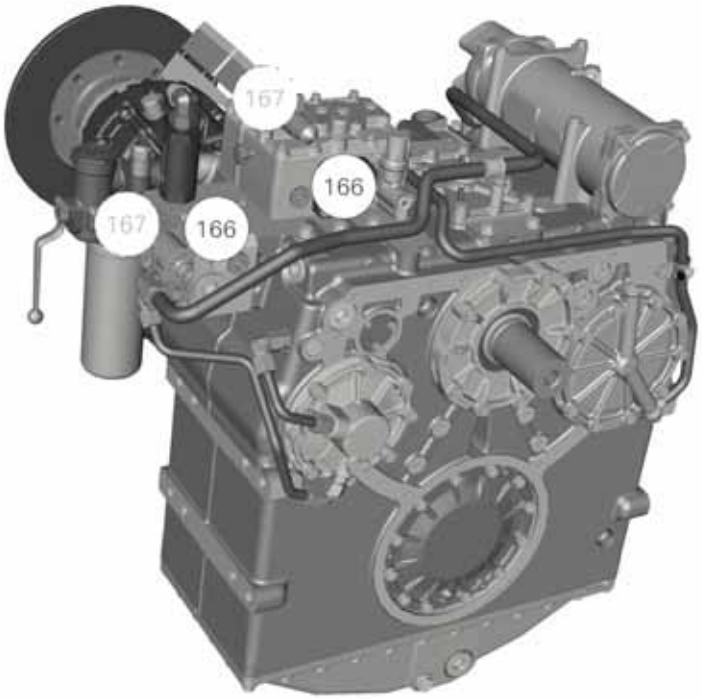

Fig. 291

9.20.1 Design of the control unit

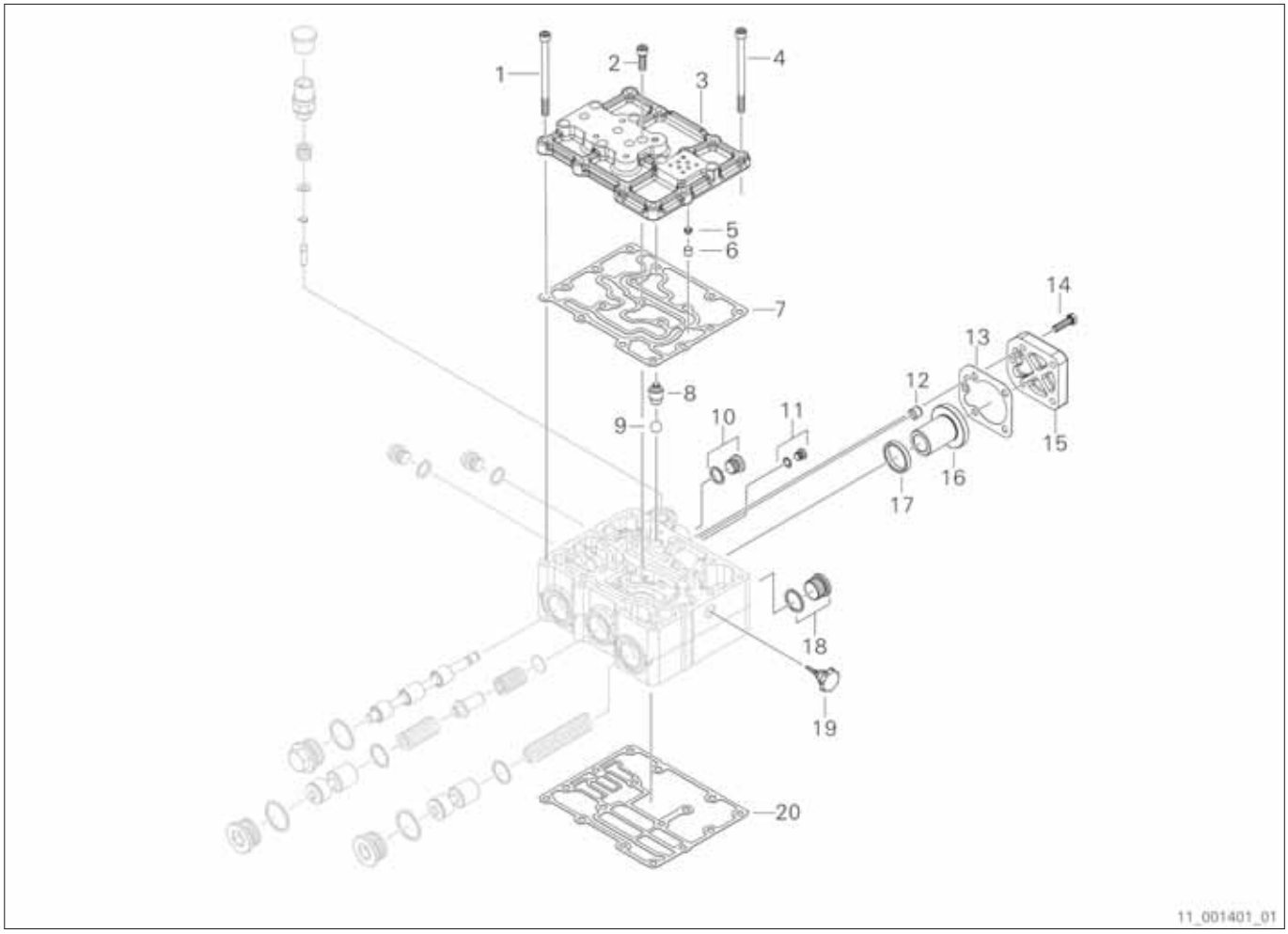

Fig. 292

1 Screw
2 Screw
3 Cover
4 Screw
5 Screen
6 Bush
7 Seal
8 Pin
9 Ball
10 Screw plug and sealing ring
11 Screw plug and sealing ring
12 Cover
13 Seal
14 Screw
15 Cover
16 Piston
17 Spacer bushing
18 Screw plug and sealing ring
19 Star knob
20 Seal

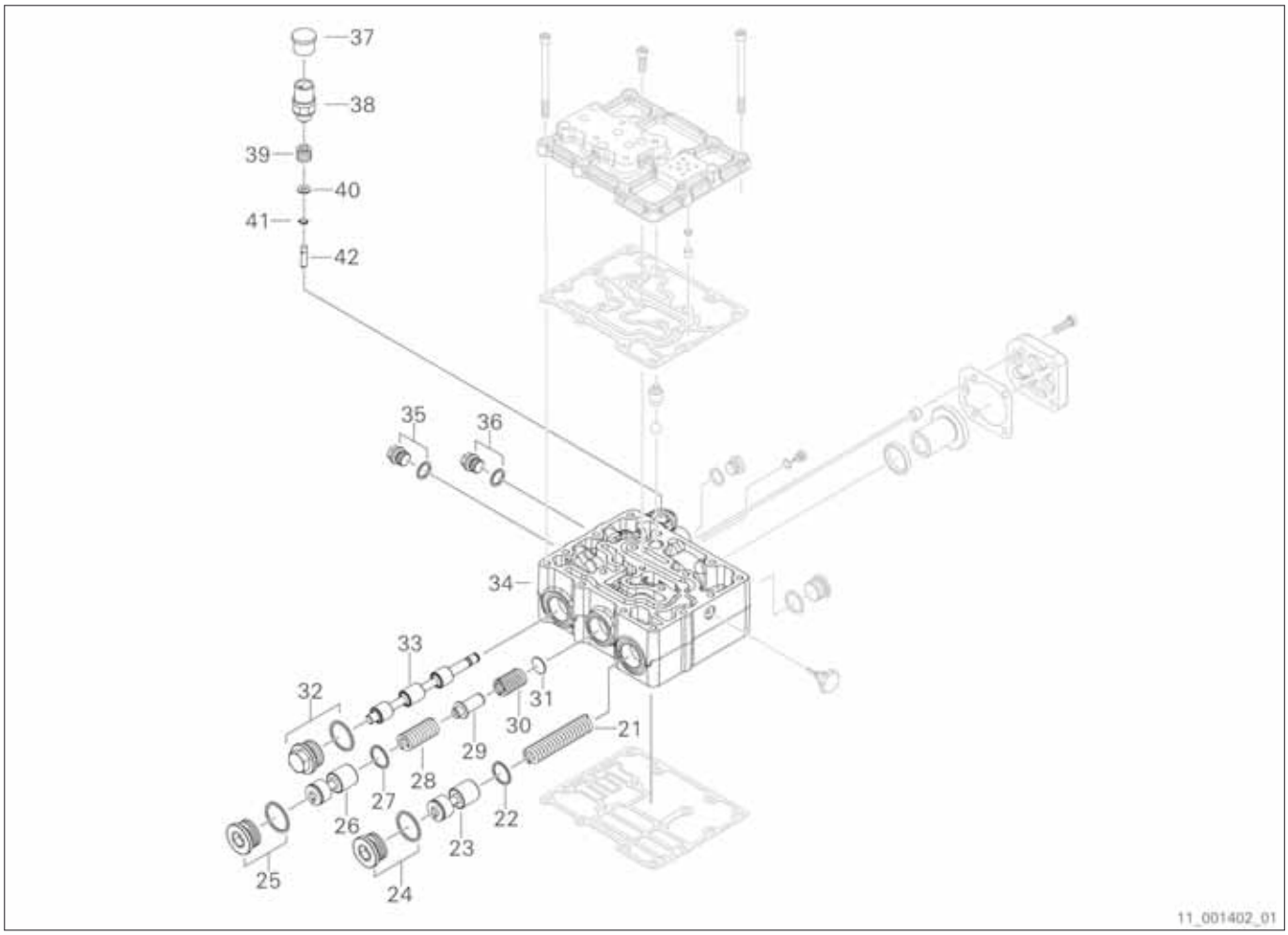

Fig. 293

21 Compression spring
22 Snap ring
23 Control piston
24 Screw plug and sealing ring
25 Screw plug and sealing ring
26 Control piston
27 Snap ring
28 Compression spring
29 Bush
30 Compression spring
31 Washer
32 Screw plug and sealing ring
33 Control piston
34 Control unit housing
35 Screw plug and sealing ring
36 Screw plug and sealing ring
37 Protective cover
38 Switch
39 Compression spring
40 Washer
41 Retaining ring
42 Detent bolt

9.20.2 Checking the control unit

If possible, carry out this maintenance work together with maintenance work 167.

1. Check control unit.

Where possible, replace the control unit rather than disassemble it.

If it must be disassembled for cleaning or for replacing individual compression springs, the control unit does not need to be reset afterwards. It is necessary, however, to perform a pressure test on the transmission.

9.20.3 Design of the power take-in valve block

The parts marked with * are not present in every valve block.

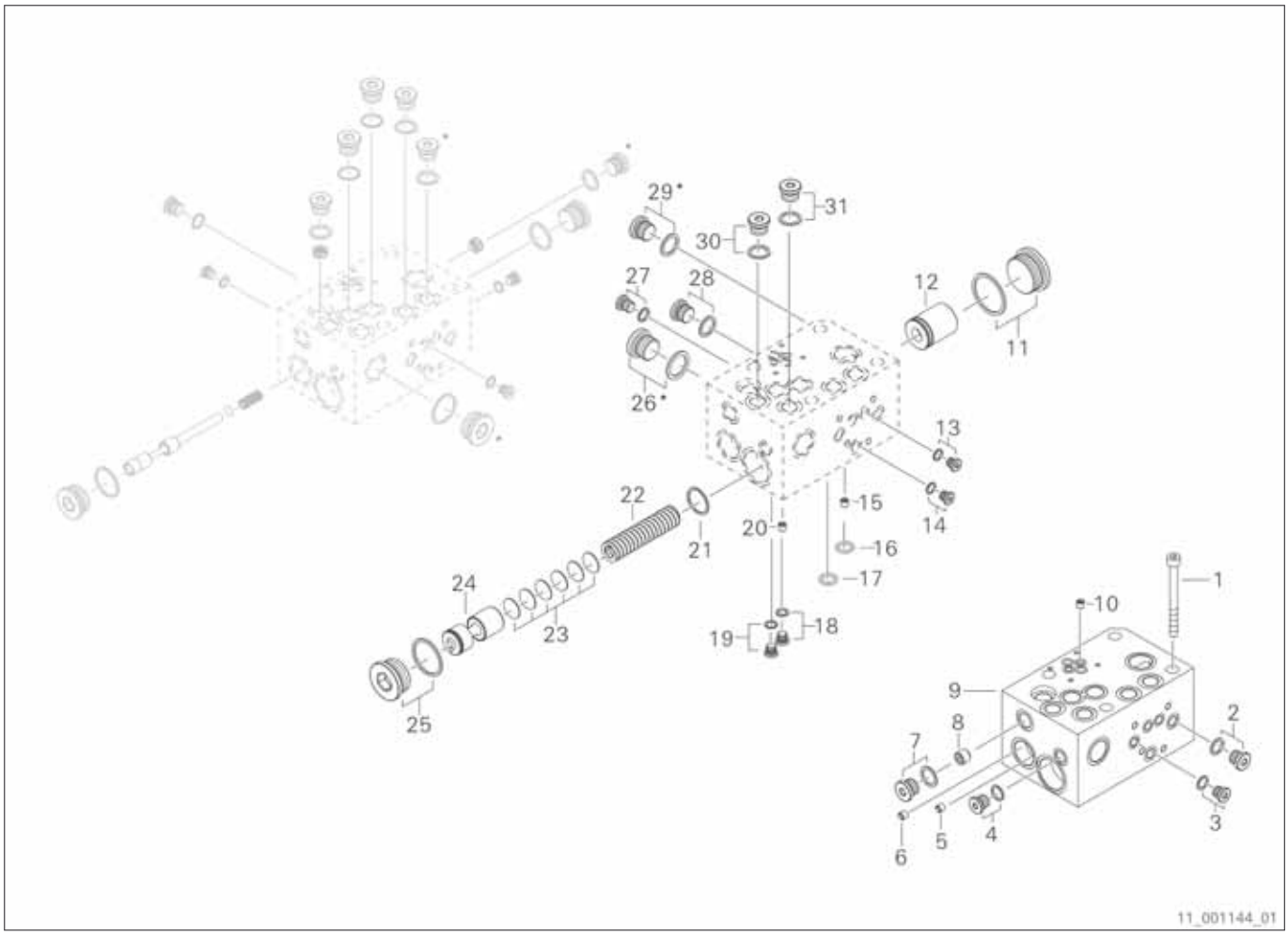

Fig. 294

1 Screw
3 Screw plug and sealing ring
5 Cover
7 Screw plug and sealing ring
9 Housing
11 Screw plug and sealing ring
13 Screw plug and sealing ring
15 Headless screw
17 O-ring
19 Screw plug and sealing ring
21 Snap ring
23 Washer
25 Screw plug and sealing ring
27 Screw plug and sealing ring
29* Screw plug and sealing ring
31 Screw plug and sealing ring

2 Screw plug and sealing ring
4 Screw plug and sealing ring
6 Headless screw
8 Cover
10 Headless screw
12 Non-return valve
14 Screw plug and sealing ring
16 O-ring
18 Screw plug and sealing ring
20 Headless screw
22 Compression spring
24 Control piston
26* Screw plug and sealing ring
28 Screw plug and sealing ring
30 Screw plug and sealing ring

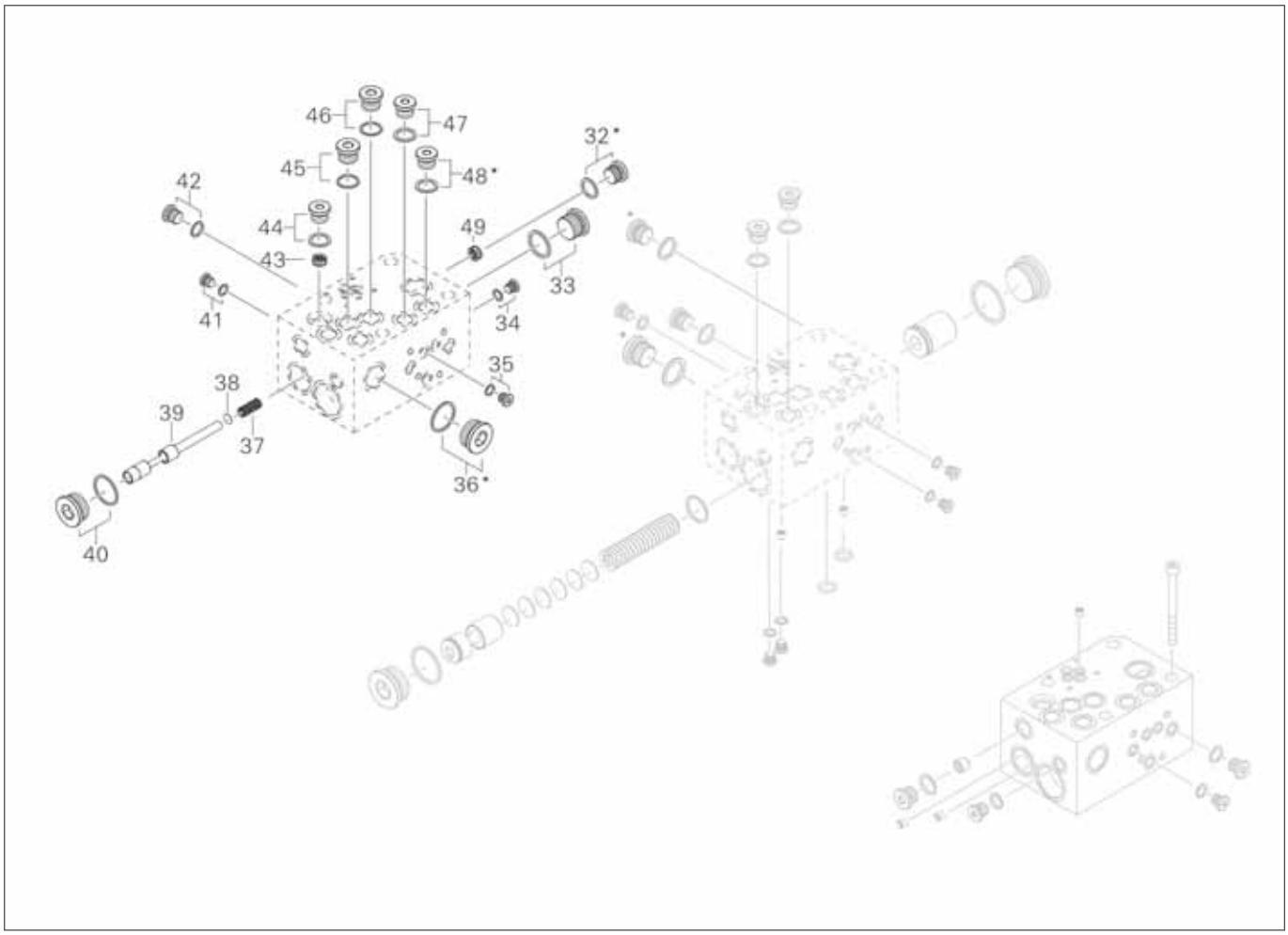

Fig. 295

32* Screw plug and sealing ring
34 Screw plug and sealing ring
36* Screw plug and sealing ring
38 Shim ring
40 Screw plug and sealing ring
42 Screw plug and sealing ring
44 Screw plug and sealing ring
46 Screw plug and sealing ring
48* Screw plug and sealing ring
33 Screw plug and sealing ring
35 Screw plug and sealing ring
37 Compression spring
39 Control piston
41 Screw plug and sealing ring
43 Screen insert
45 Screw plug and sealing ring
47 Screw plug and sealing ring
49 Screen insert

9.20.4 Design of the shaft brake's valve block

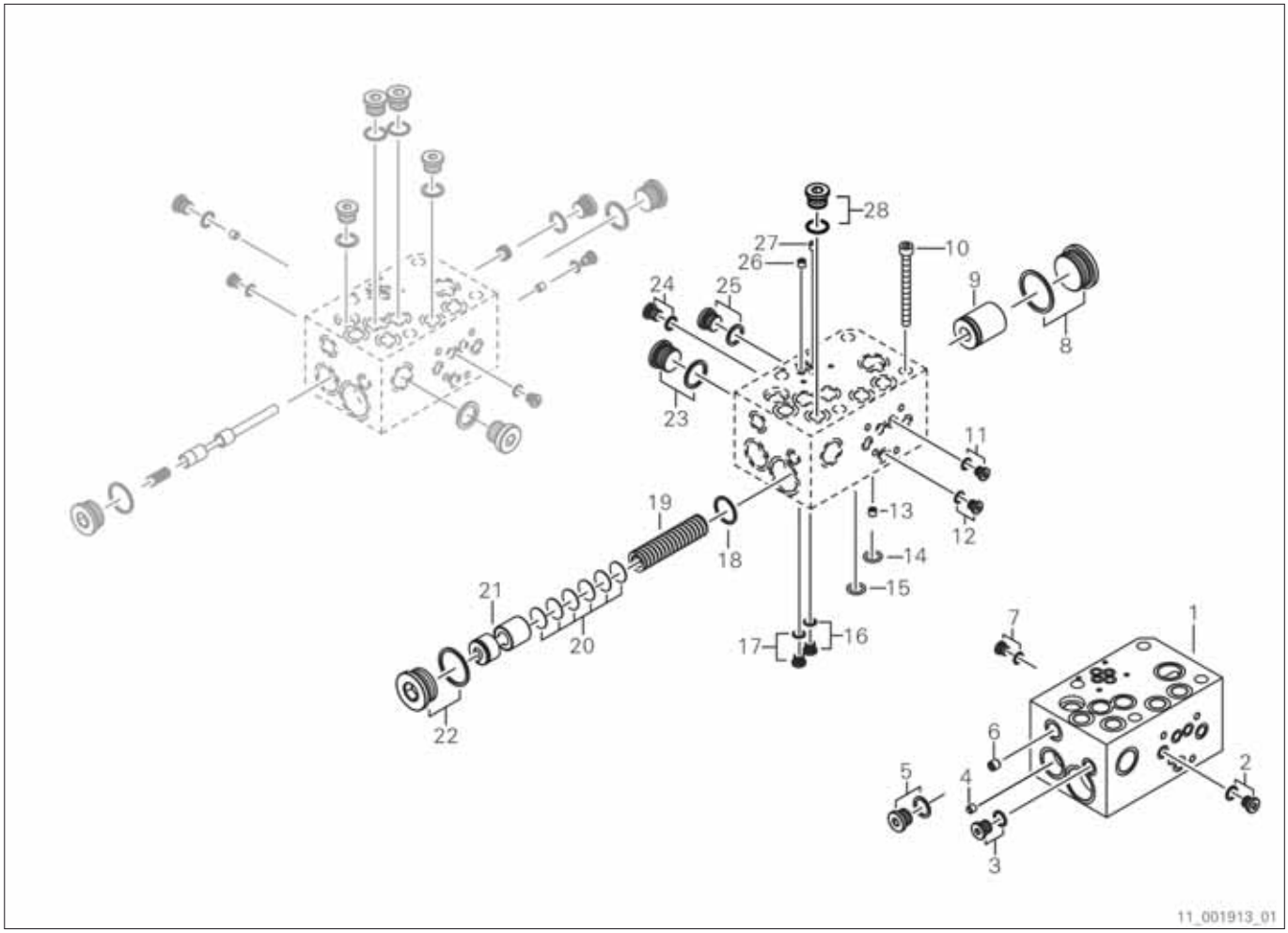

Fig. 296

1 Housing
2 Screw plug and sealing ring
3 Screw plug and sealing ring
4 Headless screw
5 Screw plug and sealing ring
6 Headless screw
7 Screw plug and sealing ring
8 Screw plug and sealing ring
9 Non-return valve
10 Screw
11 Screw plug and sealing ring
12 Screw plug and sealing ring
13 Cover
14 O-ring
15 O-ring
16 Screw plug and sealing ring
17 Screw plug and sealing ring
18 Snap ring
19 Compression spring
20 Disk
21 Control piston
22 Screw plug and sealing ring
23 Screw plug and sealing ring
24 Screw plug and sealing ring
25 Screw plug and sealing ring
26 Cover
27 Headless screw
28 Screw plug and sealing ring

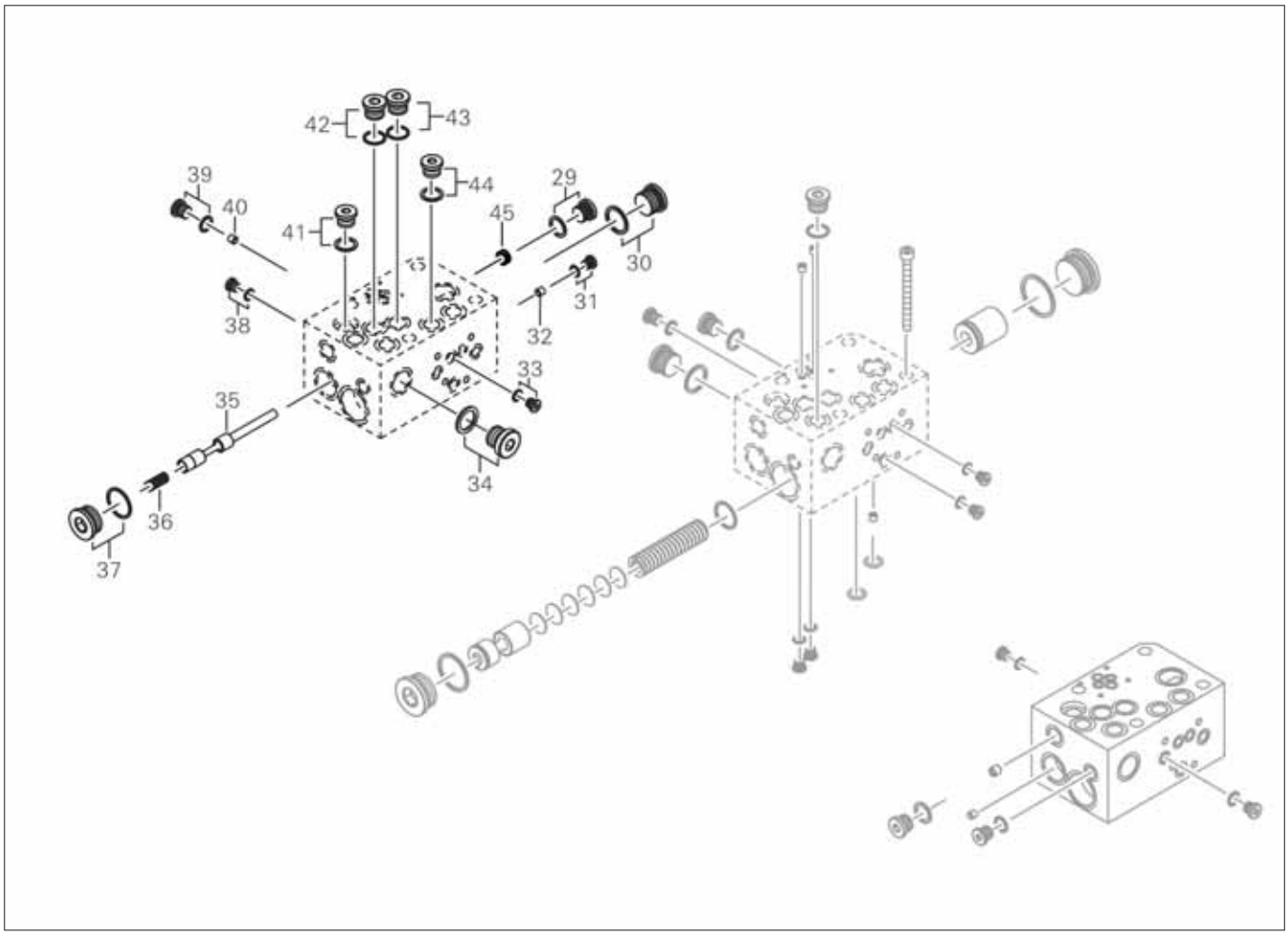

Fig. 297

29 Screw plug and sealing ring
30 Screw plug and sealing ring
31 Screw plug and sealing ring
32 Headless screw
33 Screw plug and sealing ring
34 Screw plug and sealing ring
35 Control piston
36 Compression spring
37 Screw plug and sealing ring
38 Screw plug and sealing ring
39 Screw plug and sealing ring
40 Headless screw
41 Screw plug and sealing ring
42 Screw plug and sealing ring
43 Screw plug and sealing ring
44 Screw plug and sealing ring
45 Screen insert

9.20.5 Checking the valve block

If possible, carry out this maintenance work together with maintenance work 167.

1. Check valve block.

Where possible, replace the valve block rather than disassemble it.

If it must be disassembled for cleaning or for replacing individual compression springs, the valve block does not need to be reset afterwards. It is necessary, however, to perform a pressure test on the transmission.

9.21 Maintenance work 167: Check electrical and mechanical actuation unit

	ZF 3000 family		
Maintenance work	Maintenance level	Carry out together with maintenance work	Time in minutes
167	A4	166	30
Tooling	Tool kit W1		
Parts	Seal kit		
Material	Cleaning agent, lint-free cloth		
Testing equipment	---		
Location:	Date:		Page 1 of 8

Tab. 57 Maintenance work 167

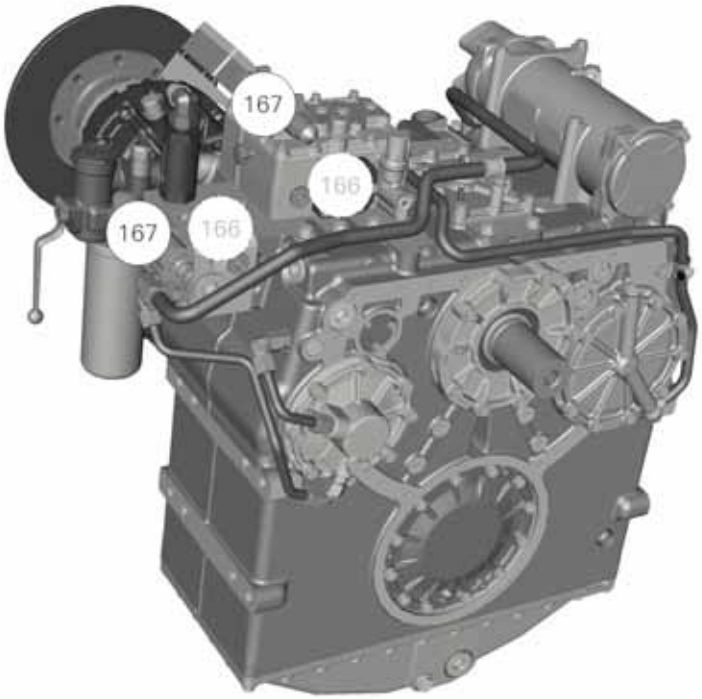

Fig. 298

9.21.1 Removing, checking and installing the mechanical actuation unit

Requirements:

- The engine starting mechanism is jammed.
- The pull-push cable or the linkage of the mechanical remote actuation on the control unit's shift lever have been unhitched.

If possible, carry out this maintenance work together with maintenance work 166.

Replace defective mechanical actuation unit as complete unit.

Removing the actuation unit

1. Loosen screws (1) and take off actuation unit (2).

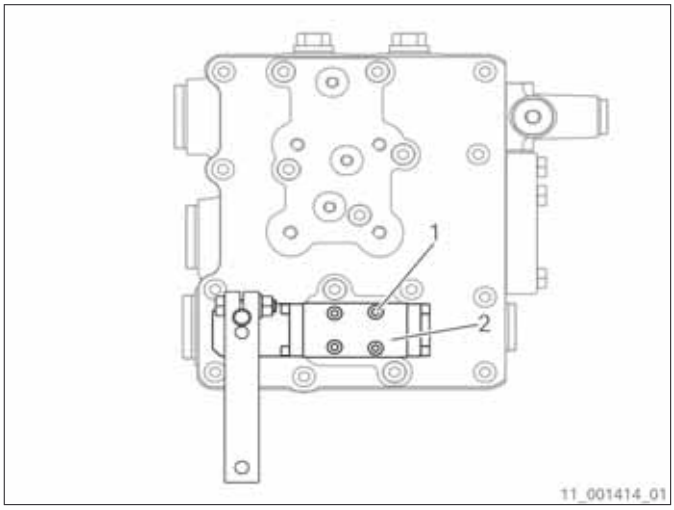

Fig. 299

Checking the actuation unit

2. Move shift lever (3) and check actuation unit (2) for ease of movement.

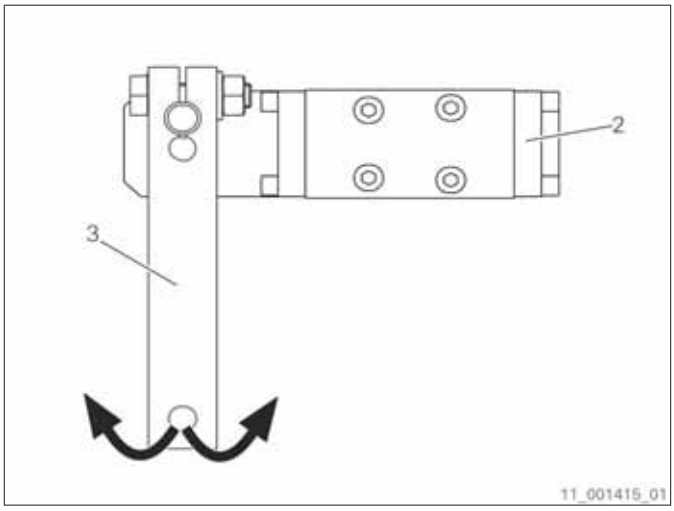

Fig. 300

Fitting actuation unit

3. Put actuation unit (2) together with O-rings on actuation unit.

4. Screw in and tighten screws (1).
   Tightening torque: 5 Nm

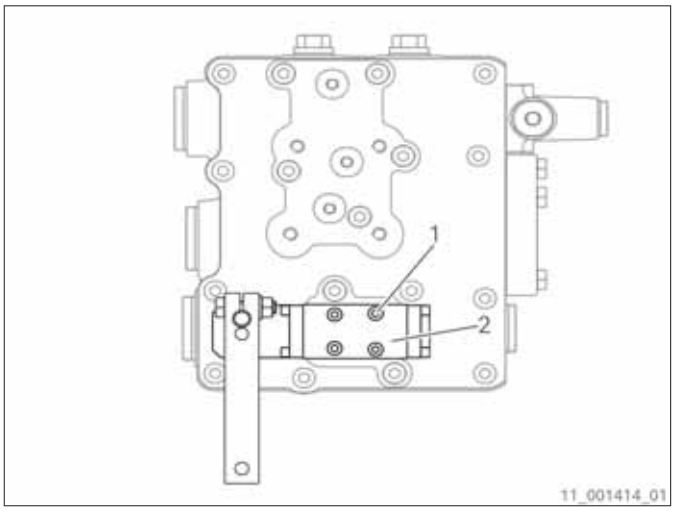

Fig. 301

5. Hitch the pull-push cable or the linkage of the mechanical remote actuation to the shift lever (3).

9.21.2 Removing, checking and installing the electric actuation unit

Requirements:

- The engine starting mechanism is jammed.

If possible, carry out this maintenance work together with maintenance work 166.

Replace defective electric actuation unit as complete unit.

Removing the actuation unit

1. Plug out connecting plugs.

2. Loosen screws (1) and take off actuation unit (2).

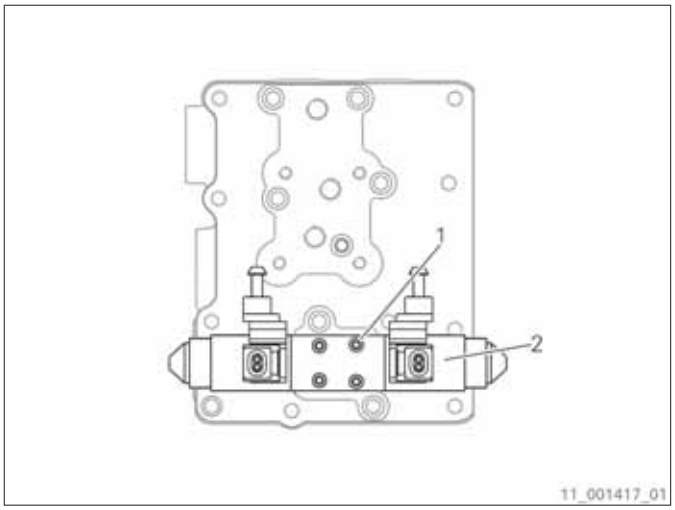

Fig. 302

Checking the actuation unit

3. Measure electrical resistance of actuation unit.

The nominal value of the electrical resistance amounts to 26.7 Ω (±8%) at 20°C.

Fitting actuation unit

4. Put actuation unit (2) together with O-rings on actuation unit.

5. Screw in and tighten screws (1).
Tightening torque: 5 Nm

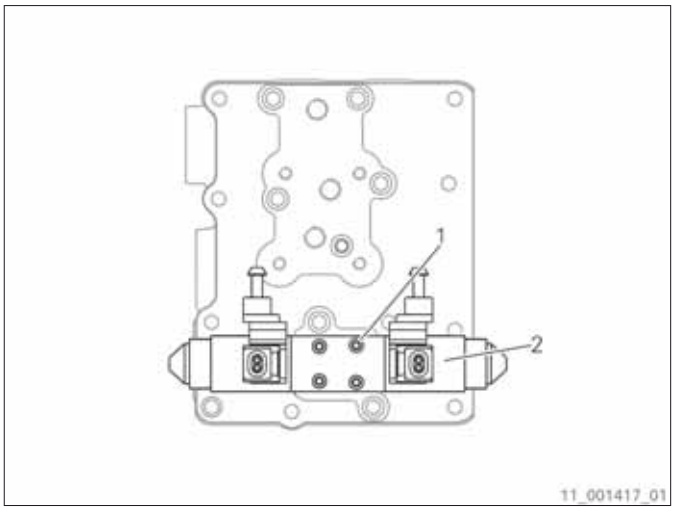

Fig. 303

6. Plug in connecting plugs.

9.21.3 Removing, checking and installing the electric actuation unit of the power take-in

Requirements:

- The engine starting mechanism is jammed.

If possible, carry out this maintenance work together with maintenance work 166.

Replace defective electric actuation unit as complete unit.

Removing the actuation unit

1. Plug out connecting plugs.

2. Loosen screws (1) and take off actuation unit (2).

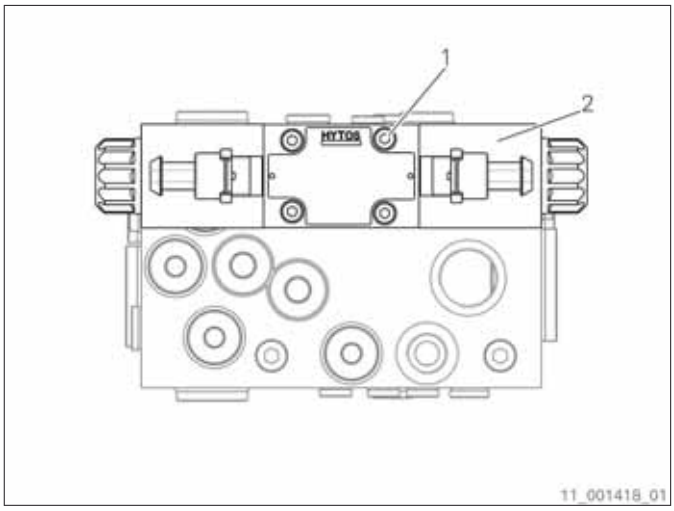

Fig. 304

Checking the actuation unit

3. Measure electrical resistance of actuation unit.

   The nominal value of the electrical resistance amounts to 26.7 Ω (±8%) at 20°C.

Fitting the actuation unit

4. Put actuation unit (2) together with O-rings on valve block.

5. Screw in and tighten screws (1).
   Tightening torque: 5.5 Nm

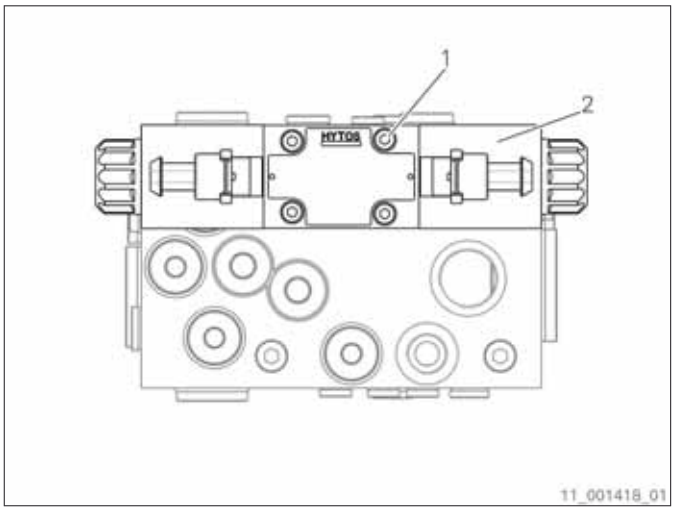

Fig. 305

6. Plug in connecting plugs.

9.21.4 Removing, checking and installing the electric actuation unit of the shaft brake

Requirements:

- The engine starting mechanism is jammed.

If possible, carry out this maintenance work together with maintenance work 166.

Replace defective electric actuation unit as complete unit.

Removing the actuation unit

1. Pull connecting plug.

2. Loosen screws (1) and take off actuation unit (2).

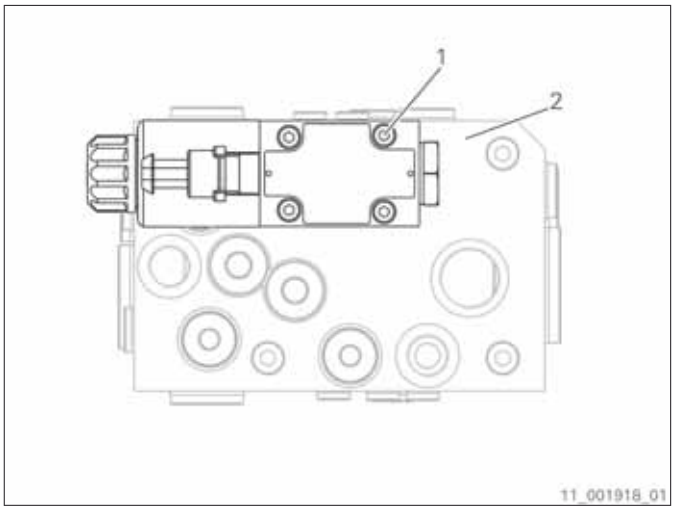

Fig. 306

Checking the actuation unit

3. Measure electrical resistance of actuation unit.

   The nominal value of the electrical resistance amounts to 26.7 Ω (±8%) at 20°C.

Fitting actuation unit

4. Put actuation unit (2) together with O-rings on valve block.

5. Screw in and tighten screws (1).
   Tightening torque: 5.5 Nm

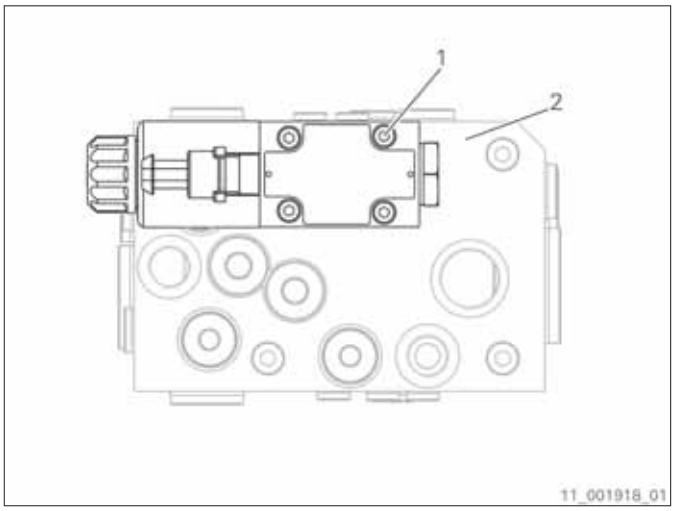

Fig. 307

6. Plug in connecting plug.

9.22 Maintenance work 168: Recalibrate display device

	ZF 3000 family		
Maintenance work	Maintenance level	Carry out together with the maintenance work	Time in minutes
168	A4	---	60
Tools	Tool kit W1		
Parts	Sealing ring		
Material	Cleaning agent, lint-free cloth		
Test equipment	Calibrated pressure gage and thermometer		
Location:	Date:		Page 1 of 2

Tab. 58 Maintenance work 168

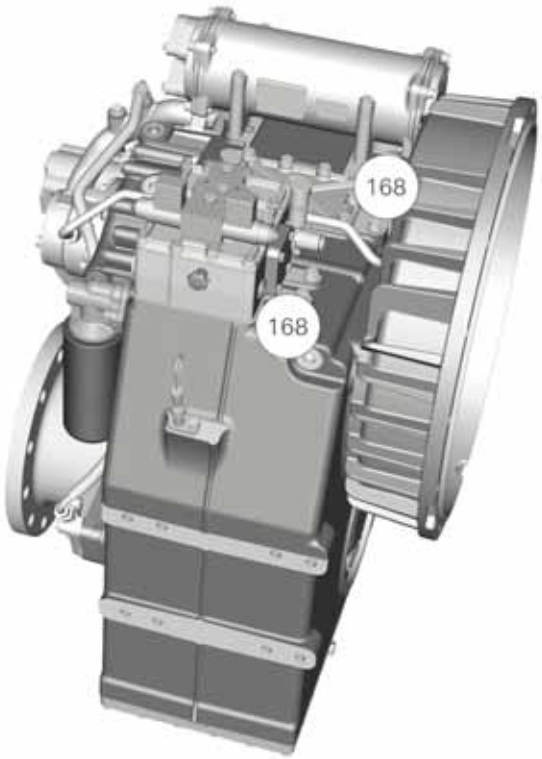

Fig. 308

9.22.1 Recalibrating the display device

1. Check that the display devices for the oil pressures and the oil temperatures display the correct value.

Carrying out alternative 1

2. Connect the calibrated display devices in parallel and compare the displayed values.

   The display error must not be more than 3.5% in the respective operating range.

Carrying out alternative 2

3. Remove the display devices and have them recalibrated or use replacement display devices.

9.23 Maintenance work 169: Visually inspect and clean transmission oil cooler

	ZF 3000 family		
Maintenance work	Maintenance level	Carry out together with the maintenance work	Time in minutes
169	Z2, A3.1, A4	---	180
Tools	Tool kit W1		
Parts	Seal kit		
Material	Oil pan, cleaning agent, lint-free cloth, lubricating oil		
Test equipment	---		
Location:	Date:		Page 1 of 22

Tab. 59 Maintenance work 169

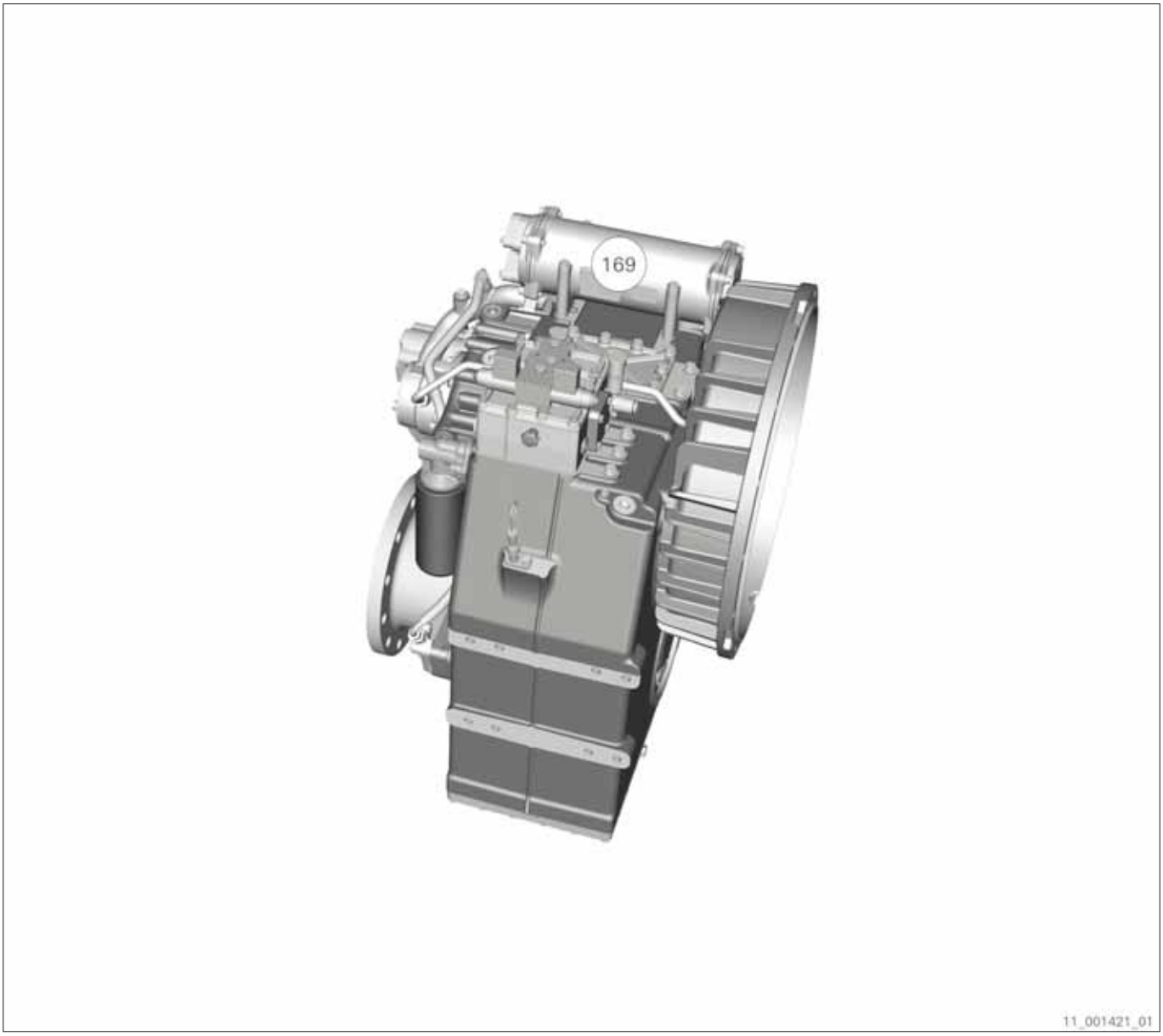

Fig. 309

9.23.1 Design of the transmission oil cooler

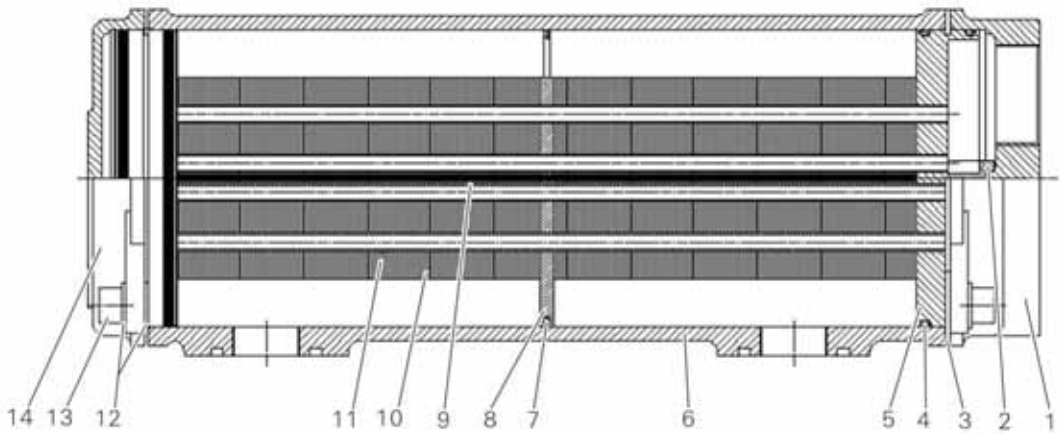

Fig. 310

1 Water supply cover
2 Separating strip
3 Locating plate
4 O-ring
5 Tube plate
6 Housing
7 Multidisk ring
8 Deflection plate
9 Sealing strip
10 Fin package
11 Tubing (tube bundle)
12 Washer
13 Screw
14 Cover

The actual design of the transmission oil cooler may deviate in some details.

9.23.2 Disassembling the transmission oil cooler without removal of the tube bundle

O-rings can be obtained from the Customer Service department of ZF Friedrichshafen AG; please specify the ZF part number. Replace O-rings that must be removed during maintenance each time.

The figures may deviate from the ZF product.

1. Mark the position of the bolted flanges in relation to each other.
2. Close off tubing.
3. Empty the transmission oil cooler on the water end.
4. Remove tubes on the water end.
5. After the unit has been switched off, wait 30 min until the oil pressure has fallen.
6. Work step only necessary for transmissions on which the cover (14) cannot be removed due to lack of space.

   Make pan available to collect oil.
7. Work step only necessary for transmissions on which the cover (14) cannot be removed due to lack of space.

   Loosen screws (15) and take off transmission oil cooler.
8. **CAUTION**

   Risk of burns due to contact with hot oil.
   Slight or moderate injury possible.
   - ⇨ Wear protective goggles.
   - ⇨ Wear protective gloves.

   Take off transmission oil cooler and collect oil in a sufficiently large container.

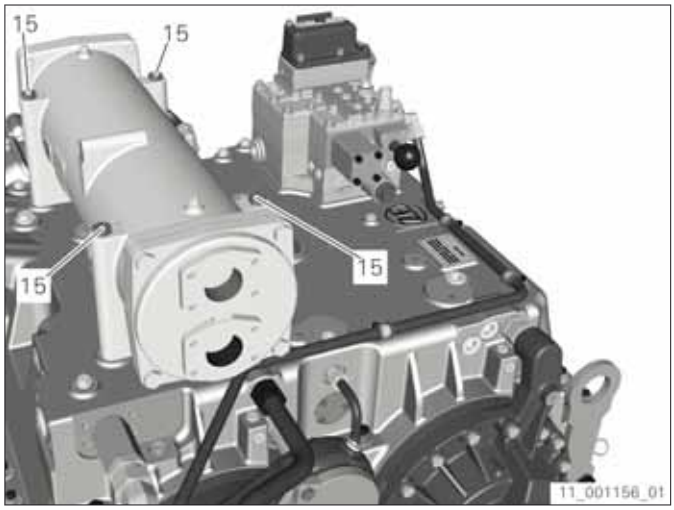

Fig. 311

9. Remove screws (13) from the water supply cover (1) and take off the water supply cover (1).

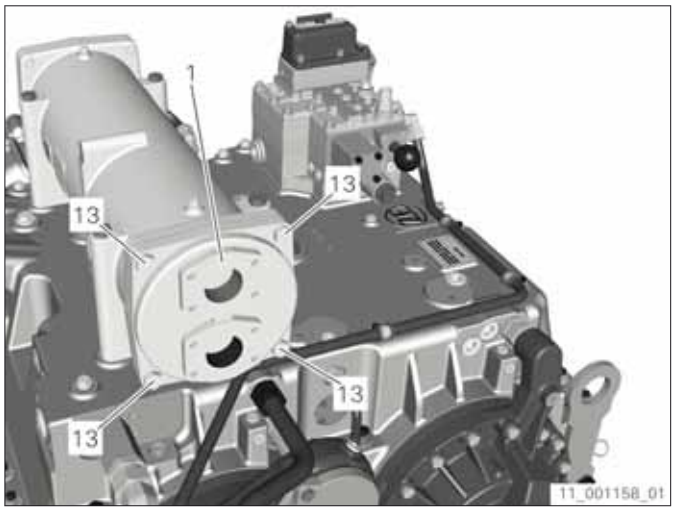

Fig. 312

10. Remove locating plates (3).

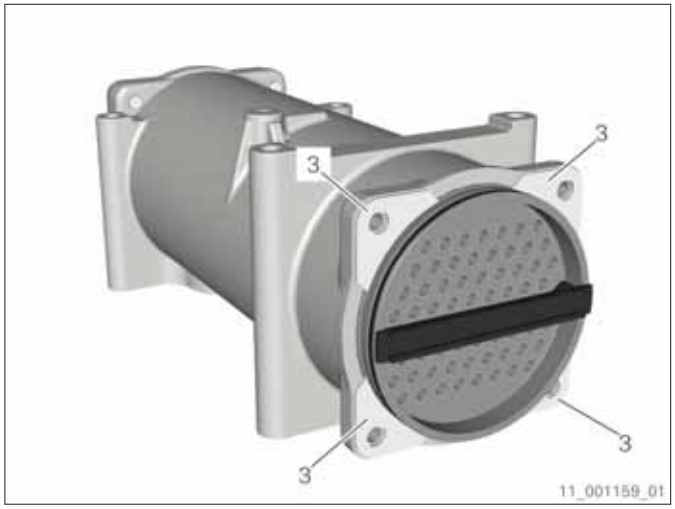

Fig. 313

11. Remove screws (13) from the cover (14) and take off the cover (14).

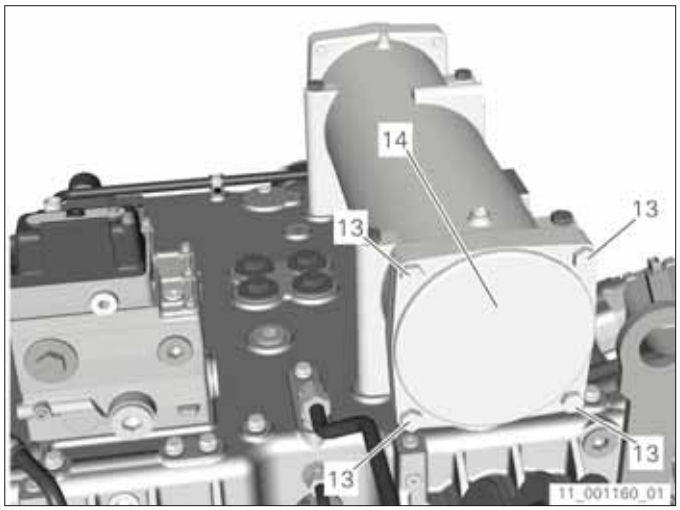

Fig. 314

12. Remove O-ring (4) from the outer groove of the tube plate (5).

    O-ring on the back side of the transmission oil cooler is removed in the same manner.

Fig. 315

13. Use four screws (13), four washers (12) and four locating plates (3) to secure the tube bundle against the housing (6) in the center groove of the tube plate (5).

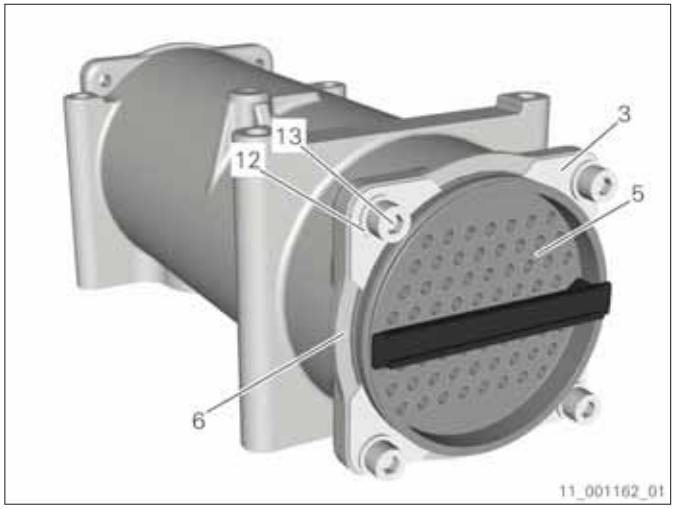

Fig. 316

14. Remove separating strip (2).

    The water end can now be checked and mechanically cleaned.

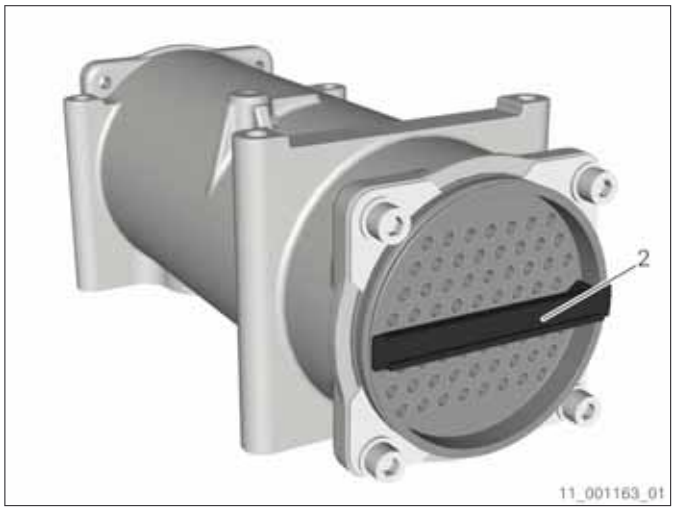

Fig. 317

9.23.3 Water end of the transmission oil cooler

Clean the transmission oil cooler on the water end at least once a year. Avoid excessive contamination of the tubes.

Shorten time intervals for maintenance in case of:

- Ship is operated for a long period in ports
- Ship is operated for a long period in dirty waters
- Experience of the ship operator

Do not remove adhering deposits with tools. Clean the tube bundle chemically in this case. Cleaning can be carried out without disassembly by coating the tubes with the chemical solution. Ensure that the separating strip and the O-rings do not contact the chemical solution. Only specially trained and authorized staff may carry out the chemical cleaning.

Suppliers of the cleaning agents are, e.g.:

- Ashland Chemicals, www.ashchem.com
- Henkel Surface Technology, www.henkel.com
- Ondeo Nalco, www.nalco.com

Suppliers of complete cleaning are, e.g.:

- Vecom, www.vecom.nl
- Ondeo Nalco, www.nalco.com

9.23.3.1 Cleaning the water end mechanically if contamination is limited

1. Disassemble transmission oil cooler *(refer to section Disassembling the transmission oil cooler without removal of the tube bundle, page 383)*.

2. Clean the inside of each tube of the tube bundle with a nylon brush *(refer to section Tools for cleaning the transmission oil cooler, page 306)*.

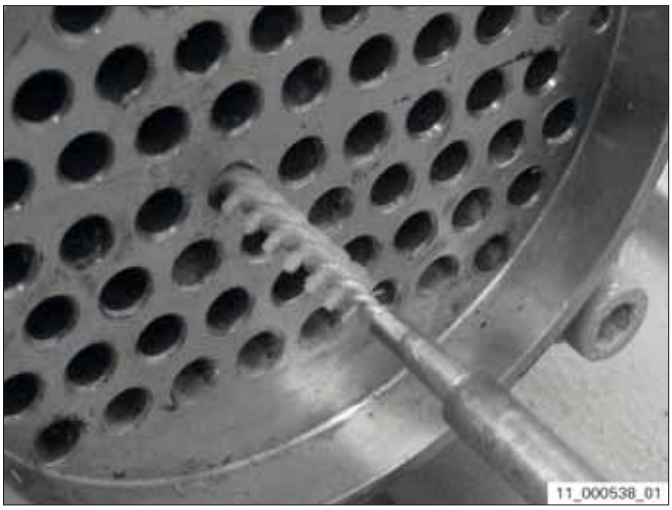

Fig. 318

Do not use metal brushes to clean the tubes.

9.23.4 Disassembling the transmission oil cooler with removal of the tube bundle

O-rings can be obtained from the Customer Service department of ZF Friedrichshafen AG; please specify the ZF part number. Replace O-rings that must be removed during maintenance each time.

These work steps are only required for a major overhaul or perhaps during troubleshooting.

The figures may deviate from the ZF product.

1. Mark the position of the bolted flanges in relation to each other.
2. Close off tubing.
3. Empty the transmission oil cooler on the water end.
4. Remove tubes on the water end.
5. After the unit has been switched off, wait 30 min until the oil pressure has fallen.
6. Make pan available to collect oil.
7. Loosen screws (15).
8. **⚠ CAUTION**

   Risk of burns due to contact with hot oil.
   Slight or moderate injury possible.
   ⇨ Wear protective goggles.
   ⇨ Wear protective gloves.

   Take off transmission oil cooler and collect oil in a sufficiently large container.

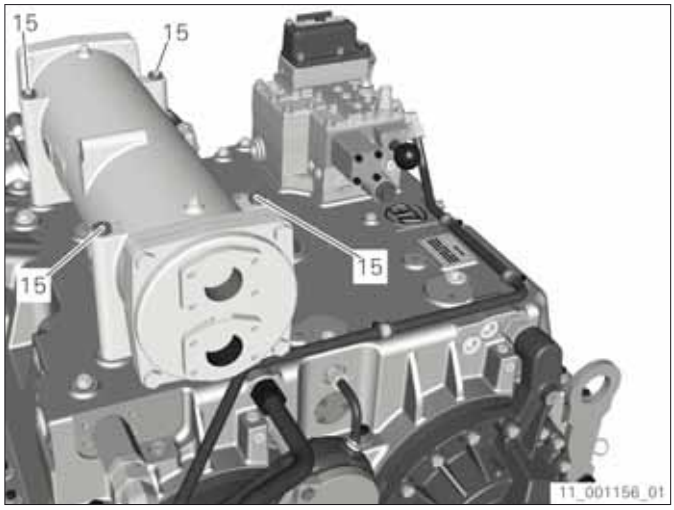

Fig. 319

9. Remove screws (13) from the water supply cover (1) and take off the water supply cover (1).

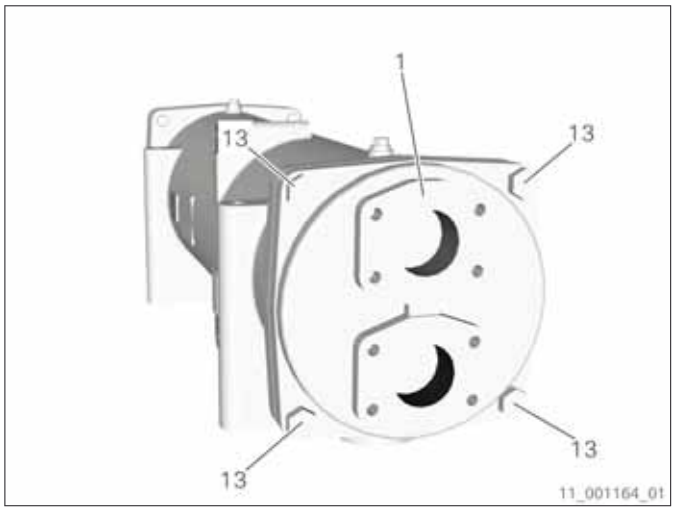

Fig. 320

10. Remove locating plates (3).

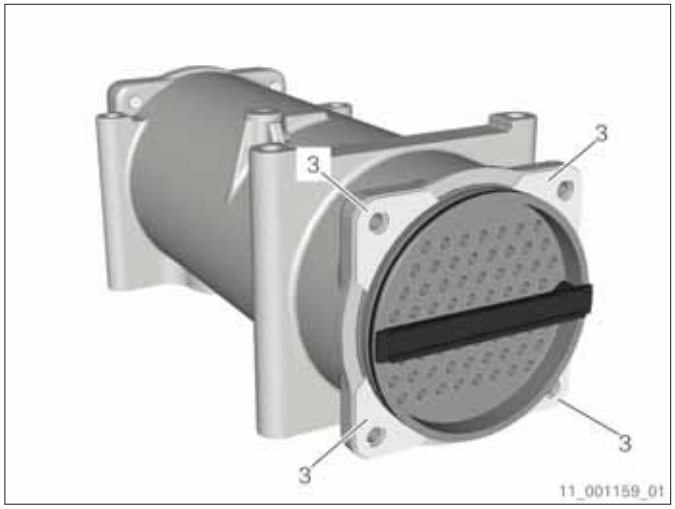

Fig. 321

11. Note F marking.

Four locating plates (3) are located between the water supply cover (1) and the housing (6). They must be reinstalled on the same side during assembly.

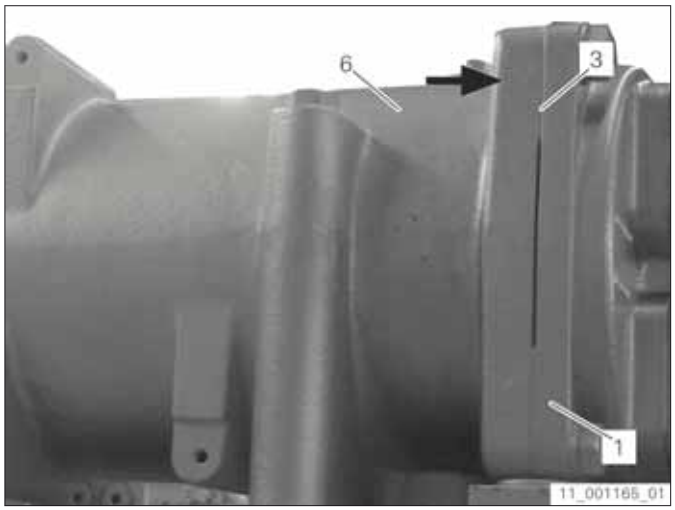

Fig. 322

12. Note X marking.

A marking is located on one tube plate (5) to indicate the correct installation position of the tube bundle (11) with respect to the housing (6). Half of an X is stamped on the edge of the tube plate (5) and the other half on the adjacent housing flange.

Fig. 323

13. Remove screws (13) from the cover (14) and take off the cover (14).

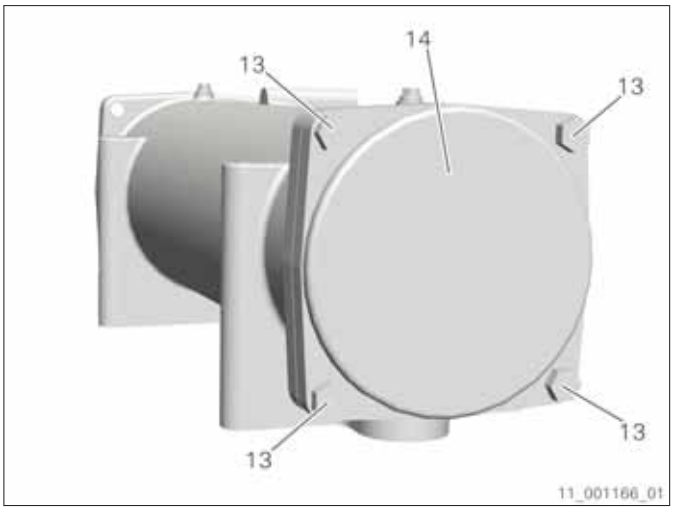

Fig. 324

14. Remove O-ring (4) from the outer groove of the tube plate (5) on the front side of the transmission oil cooler.

Fig. 325

15. Remove separating strip (2) on the front side of the transmission oil cooler.

Fig. 326

16. Remove O-ring (4) from the outer groove of the tube plate (5) on the back side of the transmission oil cooler.

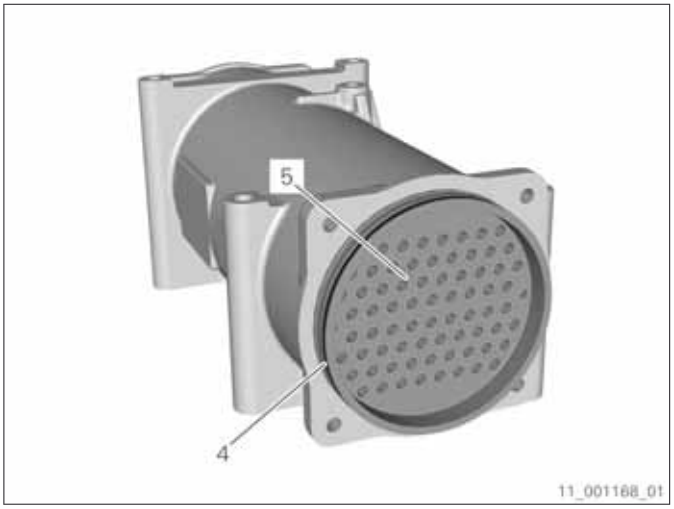

Fig. 327

17. If necessary, use an auxiliary tool to push the tube bundle (11) toward the front side of the transmission oil cooler until the O-ring (4) of the inner groove becomes visible.

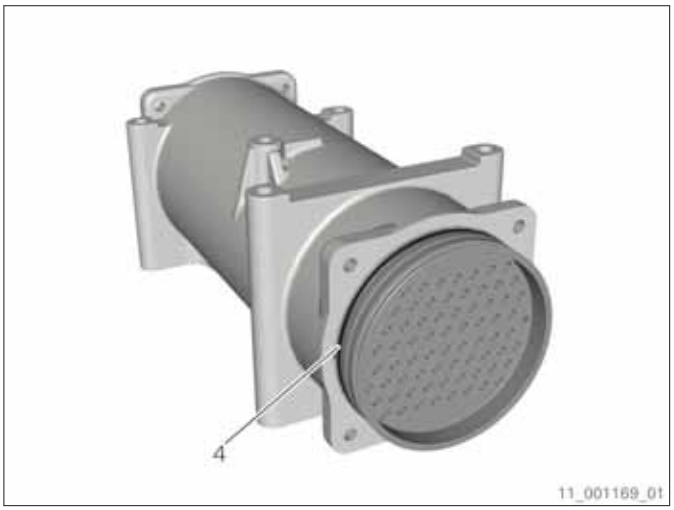

Fig. 328

18. Remove O-ring (4) from the inner groove of the tube plate (5) on the front side of the transmission oil cooler.

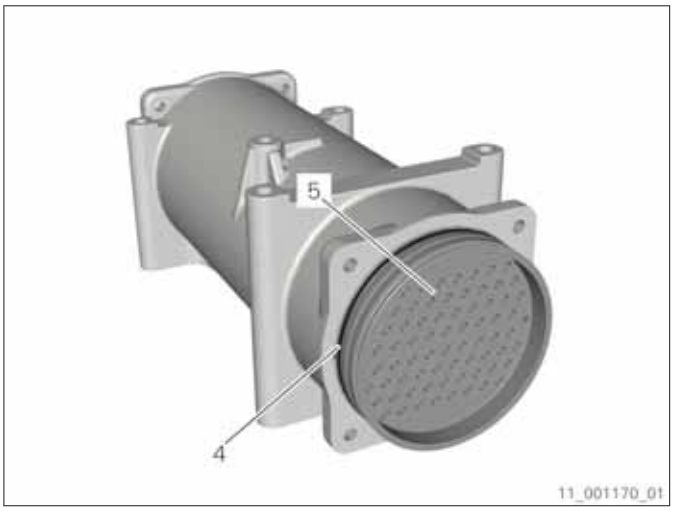

Fig. 329

19. If necessary, use an auxiliary tool to push the tube bundle (11) toward the back side of the transmission oil cooler until the O-ring (4) of the inner groove becomes visible.

Fig. 330

20. Remove O-ring (4) from the inner groove of the tube plate (5) on the back side of the transmission oil cooler.

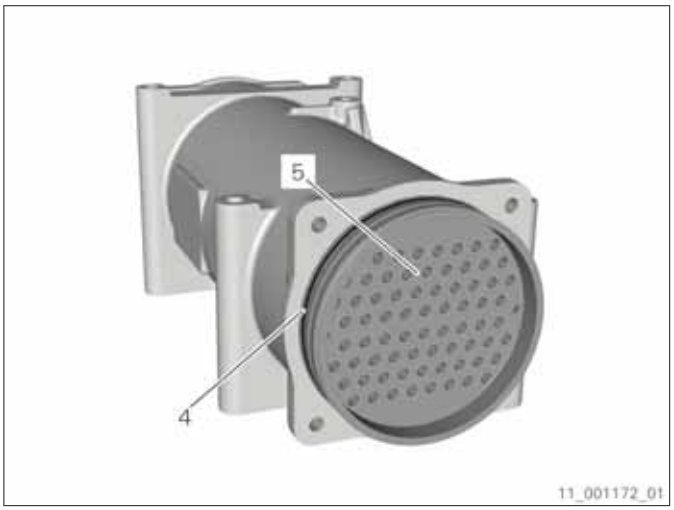

Fig. 331

21. Secure the tube bundle (11) with large-scale transport slings.

22. Pull out the tube bundle (11). Carefully remove the tube bundle from the housing (6) here so that the fin package and the grooves of the tube plates are not damaged.

Fig. 332

9.23.5 Reassembling the transmission oil cooler without removal of the tube bundle

O-rings can be obtained from the Customer Service department of ZF Friedrichshafen AG; please specify the ZF part number. Replace O-rings that must be removed during maintenance each time.

The figures may deviate from the ZF product.

1. Remove screws (13) together with washers (12) and locating plates (3).

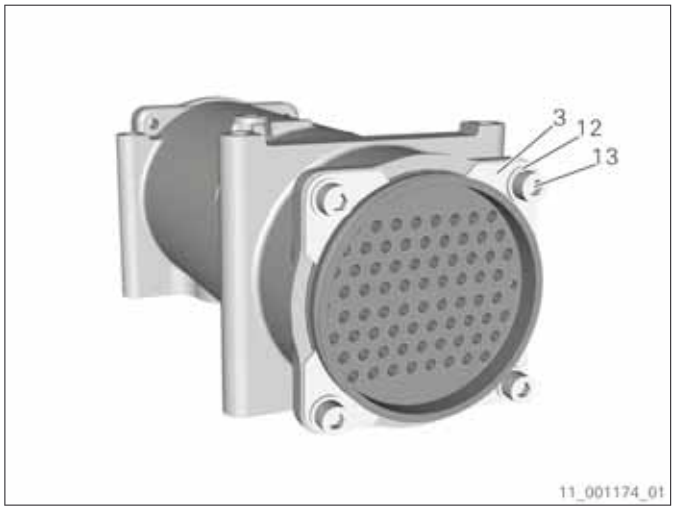

Fig. 333

2. Lubricate O-rings (4) with suitable grease and place them in the outer grooves of the tube plates (5).

   The O-ring (4) on the back side of the transmission oil cooler is installed in the same manner.

Fig. 334

3. Install separating strip (2).

   There must be a separating strip (2) in the tube plate on the water end of the transmission oil cooler. The water end is the side on which the water supply cover (1) with the two water connections is installed.

Fig. 335

4. Mount two screws (13) together with two locating plates (3) and two washers (12) into the water supply cover (1).

5. Set the water supply cover (1) on the tube plate (5) on the front side of the transmission oil cooler such that the two locating plates (3) are located in the center groove of the tube plate . In doing so, pay attention to the F marking.

6. Install the remaining locating plates (3) together with the remaining screws (13) and washers (12) in the water supply cover (1) and in the center groove of the tube plate.

7. Mount two screws (13) together with two washers each (12) into the cover (14).

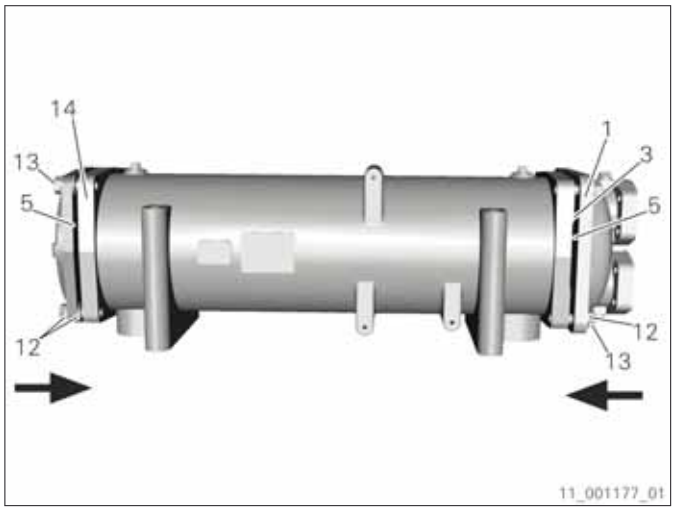

Fig. 336

8. Set the cover (14) on the tube plate (5) on the back side of the transmission oil cooler.

9. Install the remaining washers (12) together with the screws (13) in the cover (14).

10. Evenly slide the water supply cover (1) and the cover (14) onto the outer O-ring (4).

    Be sure not to shear off the O-rings (4) when sliding on the water supply cover (1) and the cover (14).

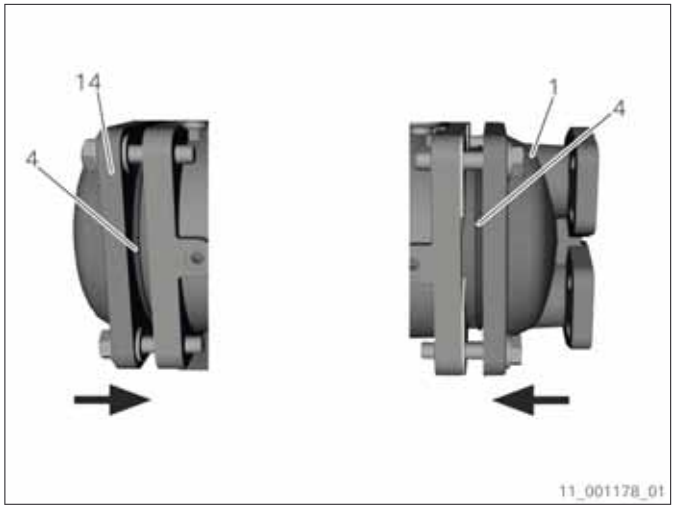

Fig. 337

11. Screw in screws (13) of cover (14) and tighten crosswise.
    Tightening torque: 46 Nm

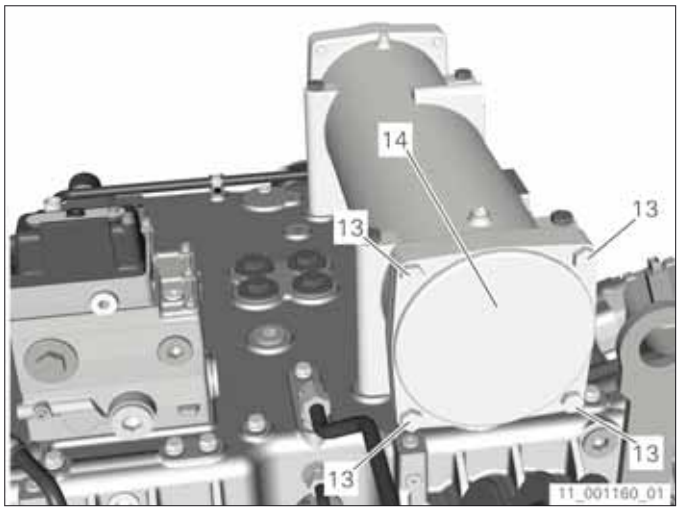

Fig. 338

12. Screw in screws (13) of the water supply cover (1) and tighten crosswise.
Tightening torque: 46 Nm

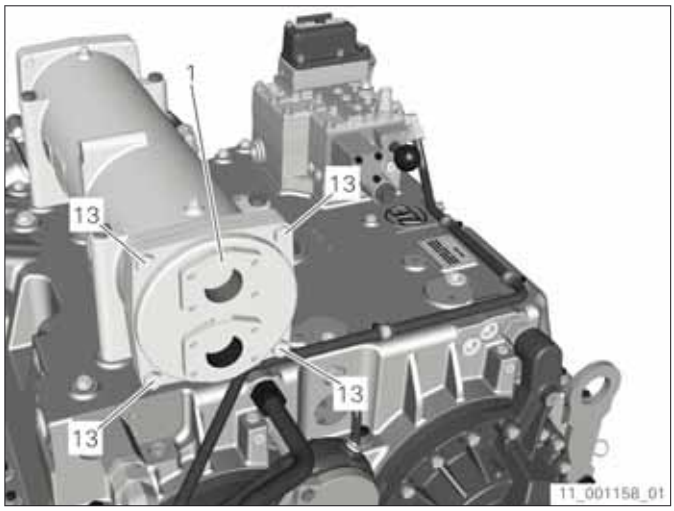

Fig. 339

13. Work step only required for transmissions for which the transmission oil cooler was removed from the transmission housing.

Ensure that O-rings are available at the tubes on the oil end.

Attach transmission oil cooler to housing using screws (15) and tighten.
Tightening torque: 46 Nm

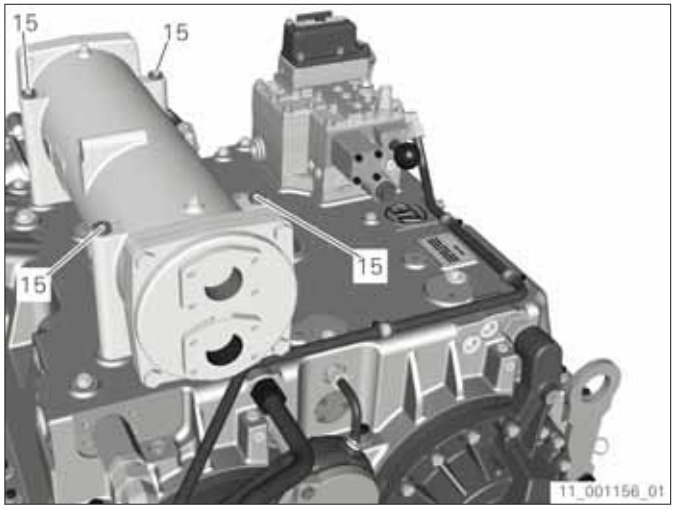

Fig. 340

14. Connect tubes on the water end. In doing so, observe the maximum permissible length of thread engagement in the connection threads for the cooling water *(refer to section Screwed socket, page 127)*.

15. Open tubes on the water end.

16. Start the engine and, for lubrication purposes, allow the transmission to run for at least 5 min at engine idle speed or at a slightly increased engine speed.

17. Bleed the transmission oil cooler on the water end.

18. Work step only required for transmissions for which the transmission oil cooler was removed from the transmission housing.

Check oil level and, if necessary, top up oil.

9.23.6 Reassembling the transmission oil cooler after removal of the tube bundle

O-rings can be obtained from the Customer Service department of ZF Friedrichshafen AG; please specify the ZF part number. Replace O-rings that must be removed during maintenance each time.

The figures may deviate from the ZF product.

1. Note the X marking.

   A marking is located on one tube plate (5) to indicate the correct installation position of the tube bundle (11) with respect to the housing (6). Half of an X is stamped on the edge of the tube plate (5) and the other half on the adjacent housing flange.

Fig. 341

2. Grease the sealing strips (9). The operating medium might be used for this.

   Replace the sealing strips (9) only if they have been damaged. The sealing strips must be effective over the entire length of the tube bundle.

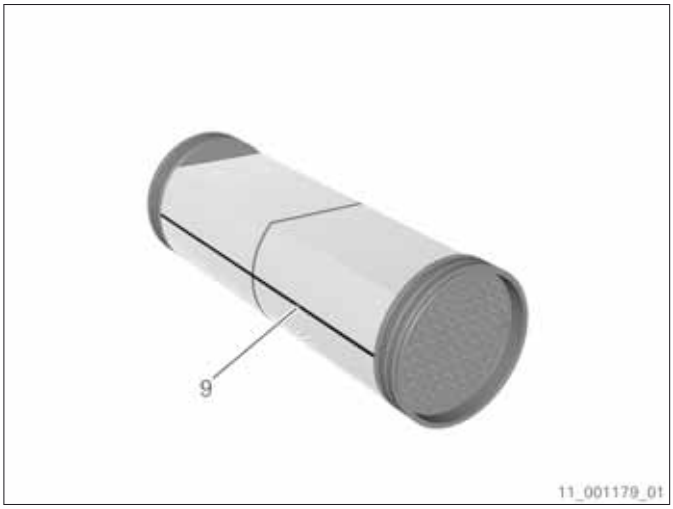

Fig. 342

3. Insert the tube bundle (11) into the housing (6).

   Be sure that the sealing strips (9) do not shift or curl when inserting the tube bundle (11).

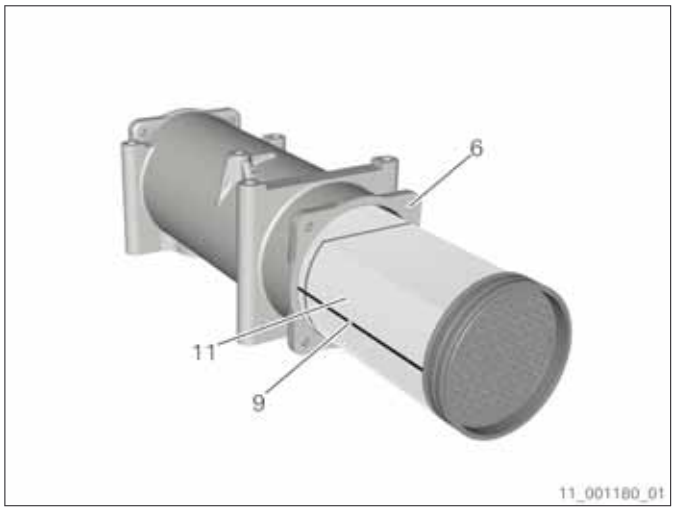

Fig. 343

4. Pay attention to the following components when installing the tube bundle (11):

   - Sealing strip(9)
   - Deflection plate(8)
   - lamellar ring(7)

   Press multidisk ring (7) and push tube bundle (11) into housing (6) up to inner groove of the tube plate (5).

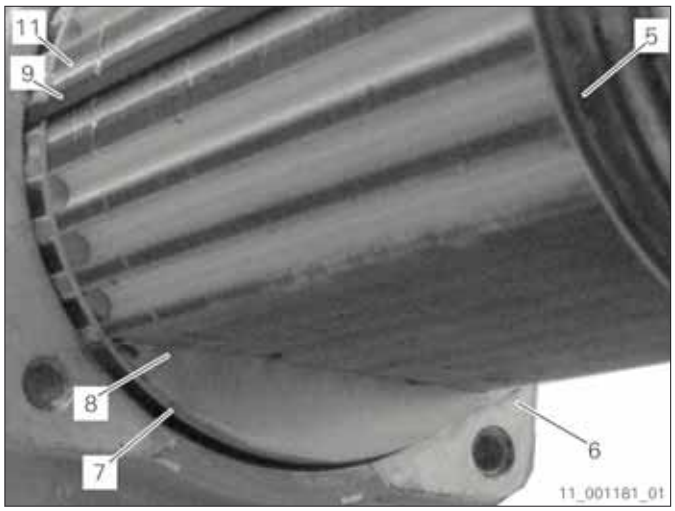

Fig. 344

5. Lubricate O-ring (4) with suitable grease and insert it into the inner groove of the tube plate (5) on the front side of the transmission oil cooler.

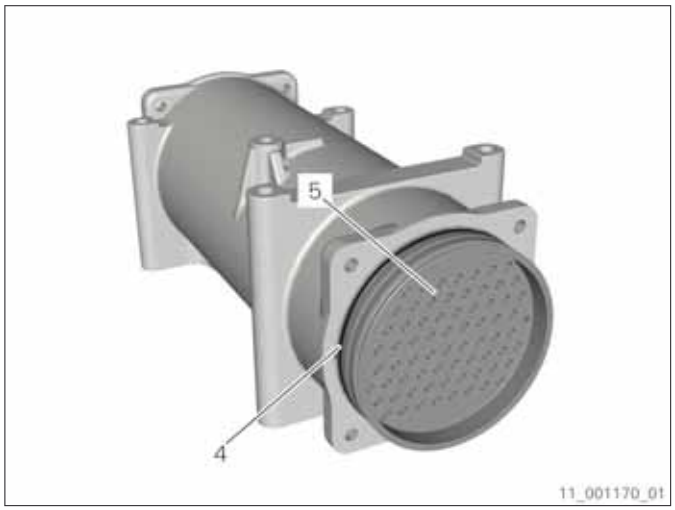

Fig. 345

6. If necessary, use an auxiliary tool to push the tube bundle (11) toward the back side of the transmission oil cooler until the inner groove of the tube plate (5) becomes visible.

   Be sure that the O-ring (4) does not shear off when pushing the tube bundle (11).

Fig. 346

7. Lubricate O-ring (4) with suitable grease and insert it into the inner groove of the tube plate (5) on the back side of the transmission oil cooler.

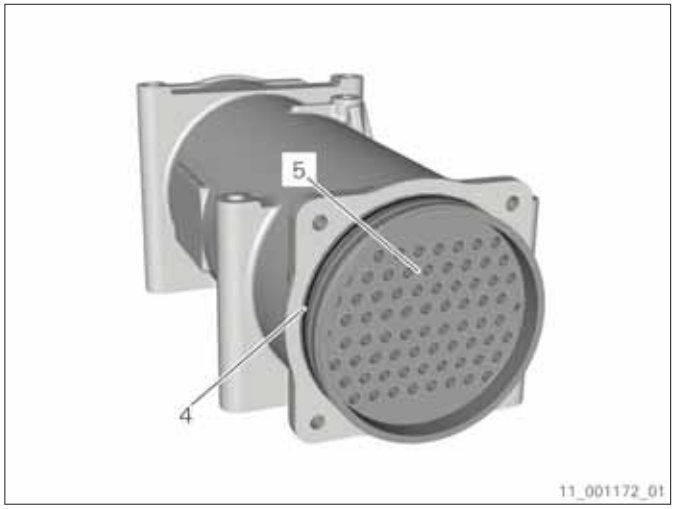

Fig. 347

8. Use an auxiliary tool to push the tube bundle (11) toward the front side of the transmission oil cooler until the outer grooves of the tube plates (5) stick out of the housing (6) equally.

   Be sure that the O-rings (4) do not shear off when pushing the tube bundle (11).

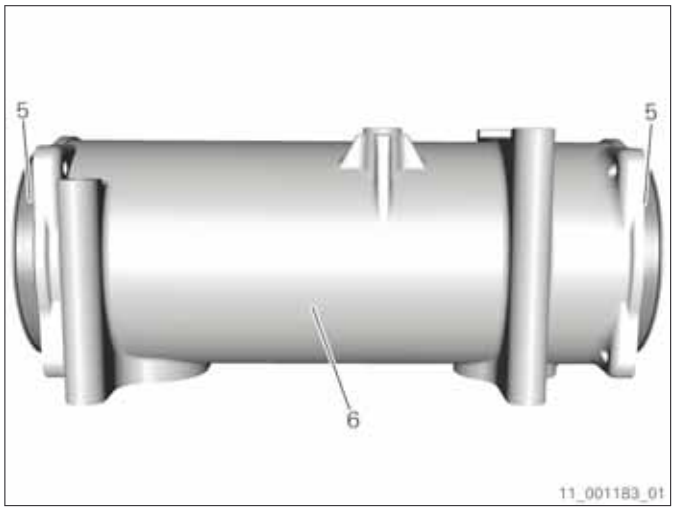

Fig. 348

9. Lubricate O-ring (4) with suitable grease and insert it into the outer groove of the tube plate (5) on the back side of the transmission oil cooler.

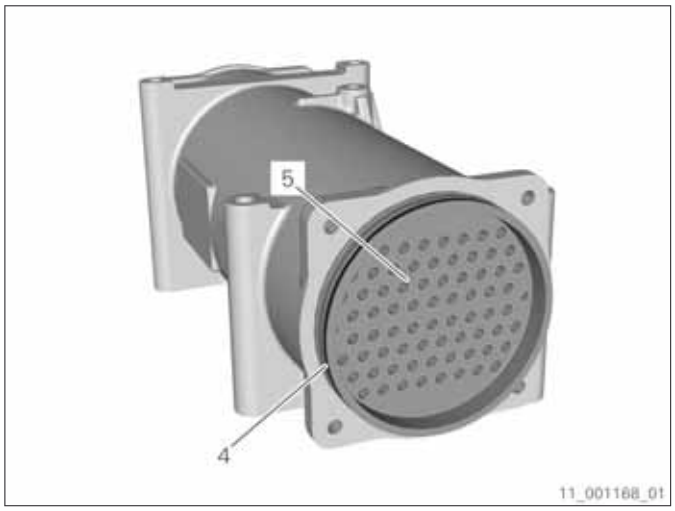

Fig. 349

10. Lubricate O-ring (4) with suitable grease and insert it into the outer groove of the tube plate (5) on the front side of the transmission oil cooler.

Fig. 350

11. Install separating strip (2).

There must be a separating strip (2) in the tube plate on the water end of the transmission oil cooler. The water end is the side on which the water supply cover (1) with the two water connections is installed.

Fig. 351

12. Mount two screws (13) together with two locating plates (3) and two washers (12) into the water supply cover (1).

13. Set the water supply cover (1) on the tube plate (5) on the front side of the transmission oil cooler such that the two locating plates (3) are located in the center groove of the tube plate . In doing so, pay attention to the F marking.

14. Install the remaining locating plates (3) together with the remaining screws (13) and washers (12) in the water supply cover (1) and in the center groove of the tube plate.

15. Mount two screws (13) together with two washers each (12) into the cover (14).

16. Set the cover (14) on the tube plate (5) on the back side of the transmission oil cooler.

17. Install the remaining washers (12) together with the screws (13) in the cover (14).

18. Evenly slide the water supply cover (1) and the cover (14) onto the outer O-ring (4).

    Be sure not to shear off the O-rings (4) when sliding on the water supply cover (1) and the cover (14).

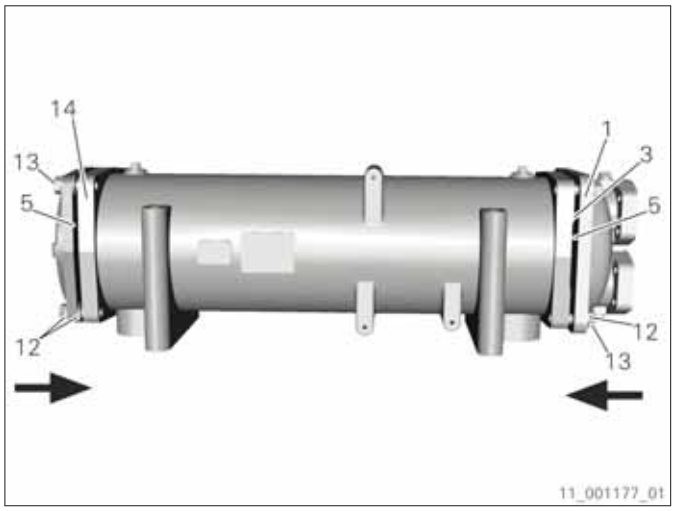

Fig. 352

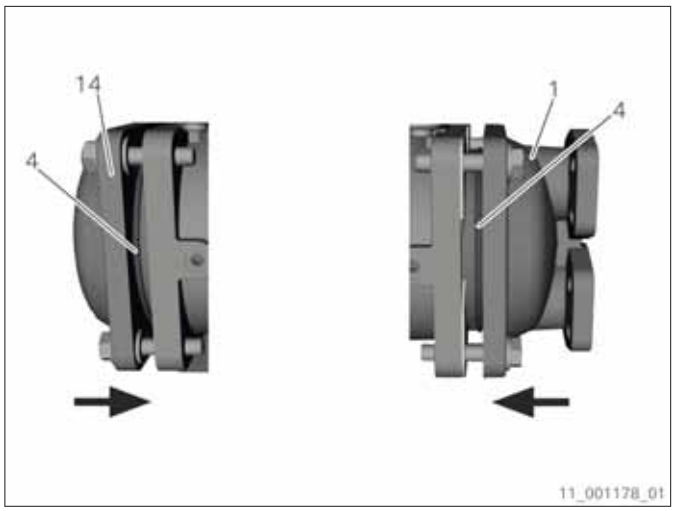

Fig. 353

19. Screw in screws (13) of cover (14) and tighten crosswise.
Tightening torque: 46 Nm

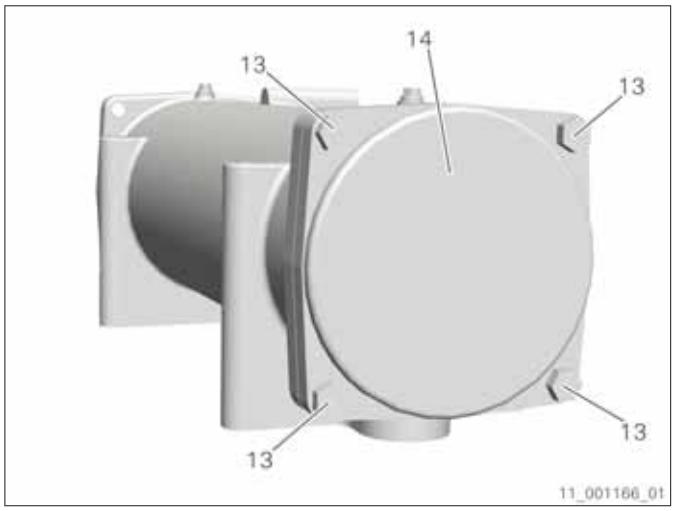

Fig. 354

20. Screw in screws (13) of the water supply cover (1) and tighten crosswise.
Tightening torque: 46 Nm

After reassembly, conduct a leak test on the oil end and on the water end. The maximum permissible pressure is listed on the type plate of the transmission oil cooler. Do not exceed this pressure value.

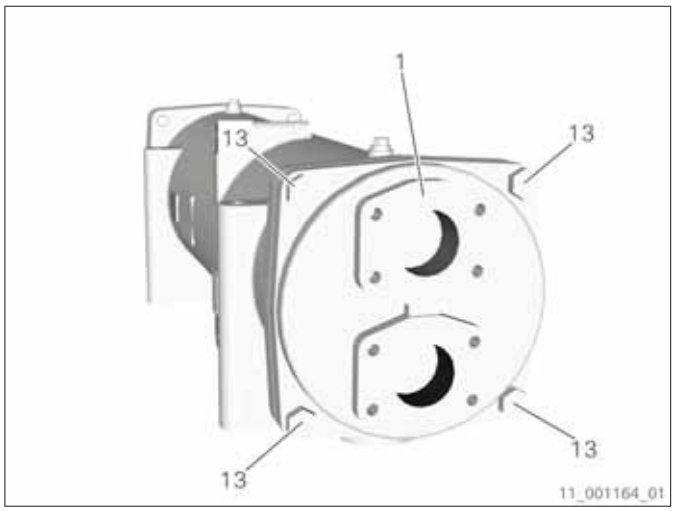

Fig. 355

21. Ensure that O-rings are available at the tubes on the oil end.

Attach transmission oil cooler to housing using screws (15) and tighten.
Tightening torque: 46 Nm

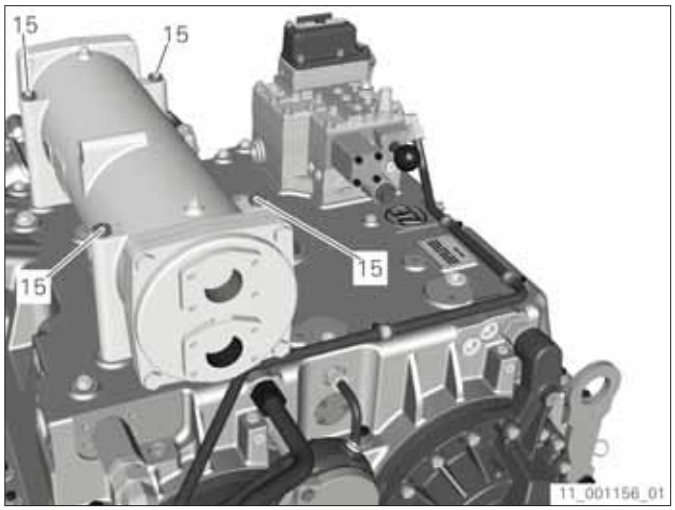

Fig. 356

22. Connect tubes on the water end. In doing so, observe the maximum permissible length of thread engagement in the connection threads for the cooling water *(refer to section Screwed socket, page 127)*.

23. Open tubes on the water end.

24. Start the engine and, for lubrication purposes, allow the transmission to run for at least 5 min at engine idle speed or at a slightly increased engine speed.

25. Bleed the transmission oil cooler on the water end.

26. Check oil level and, if necessary, top up oil.

9.24 Maintenance work 172: Check injector tube valve

	ZF 3000 family		
Maintenance work	Maintenance level	Carry out together with the maintenance work	Time in minutes
172	A4	---	30
Tools	Tool kit W1		
Parts	Sealing ring		
Material	Cleaning agent, lint-free cloth		
Test equipment	---		
Location:	Date:		Page 1 of 3

Tab. 60 Maintenance work 172

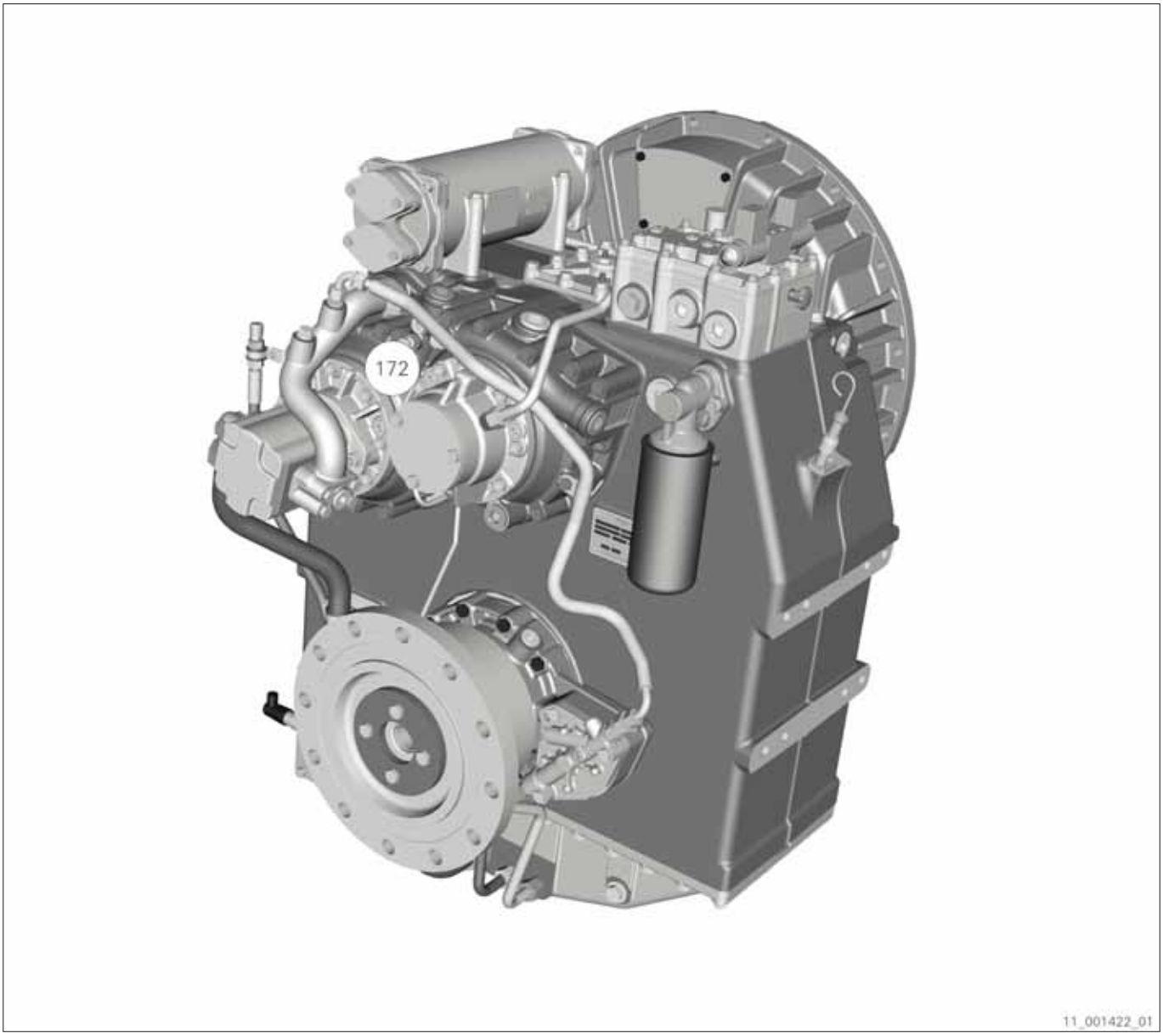

Fig. 357

9.24.1 Checking the injector tube valve

Requirements:
- Engine is switched off.
- The engine starting mechanism is jammed.
- Oil temperature amounts to max. 40-50°C.

Removing injector tube

1. Loosen screws (1).
2. Pull out injector tube (2).
3. Remove O-ring (3).

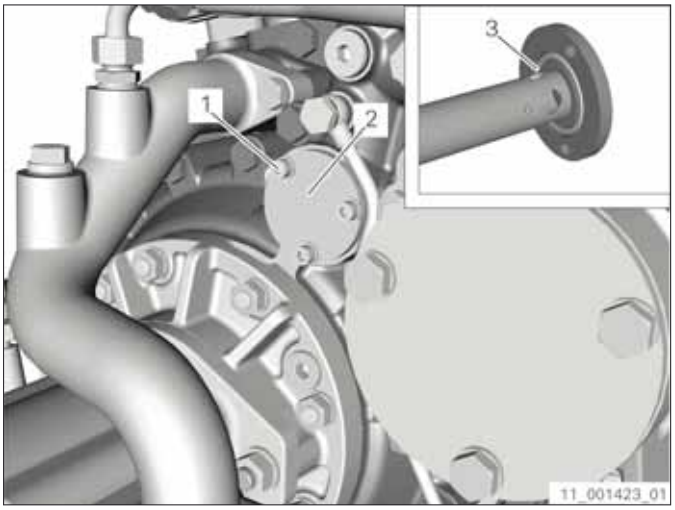

Fig. 358

Checking the injector tube

4. Visually inspect injector tube (2) for uncovered openings.
5.

NOTICE

Property damage due to improper cleaning tool possible.
⇨ Use brush.
⇨ Use lint-free cloth.

If necessary, clean injector tube (2) using diesel oil or benzine.

Installing injector tube

6. Push O-ring (3) onto injector tube (2).

7. Insert injector tube (2) into housing.

8. Screw in and tighten screws (1).
   Tightening torque: 9.5 Nm

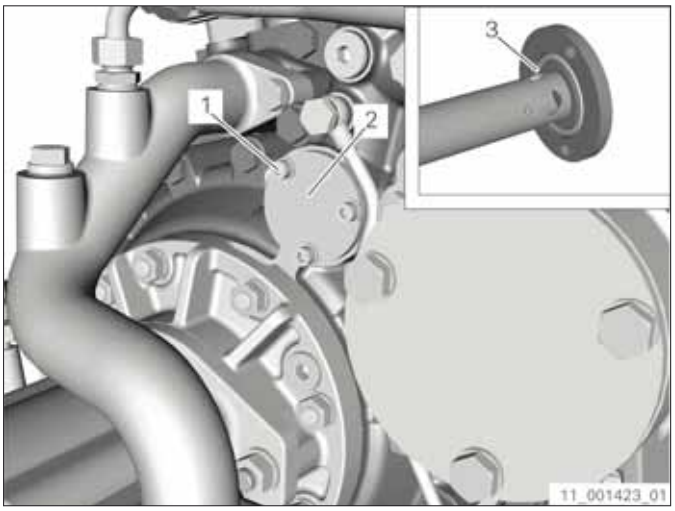

Fig. 359

9.25 Maintenance work 173: Check shaft sealing ring of the input shaft

	ZF 3000 family		
Maintenance work	Maintenance level	Carry out together with the maintenance work	Time in minutes
173	A4	174	15
Tools	---		
Parts	---		
Material	---		
Test equipment	---		
Location:	Date:		Page 1 of 2

Tab. 61 Maintenance work 173

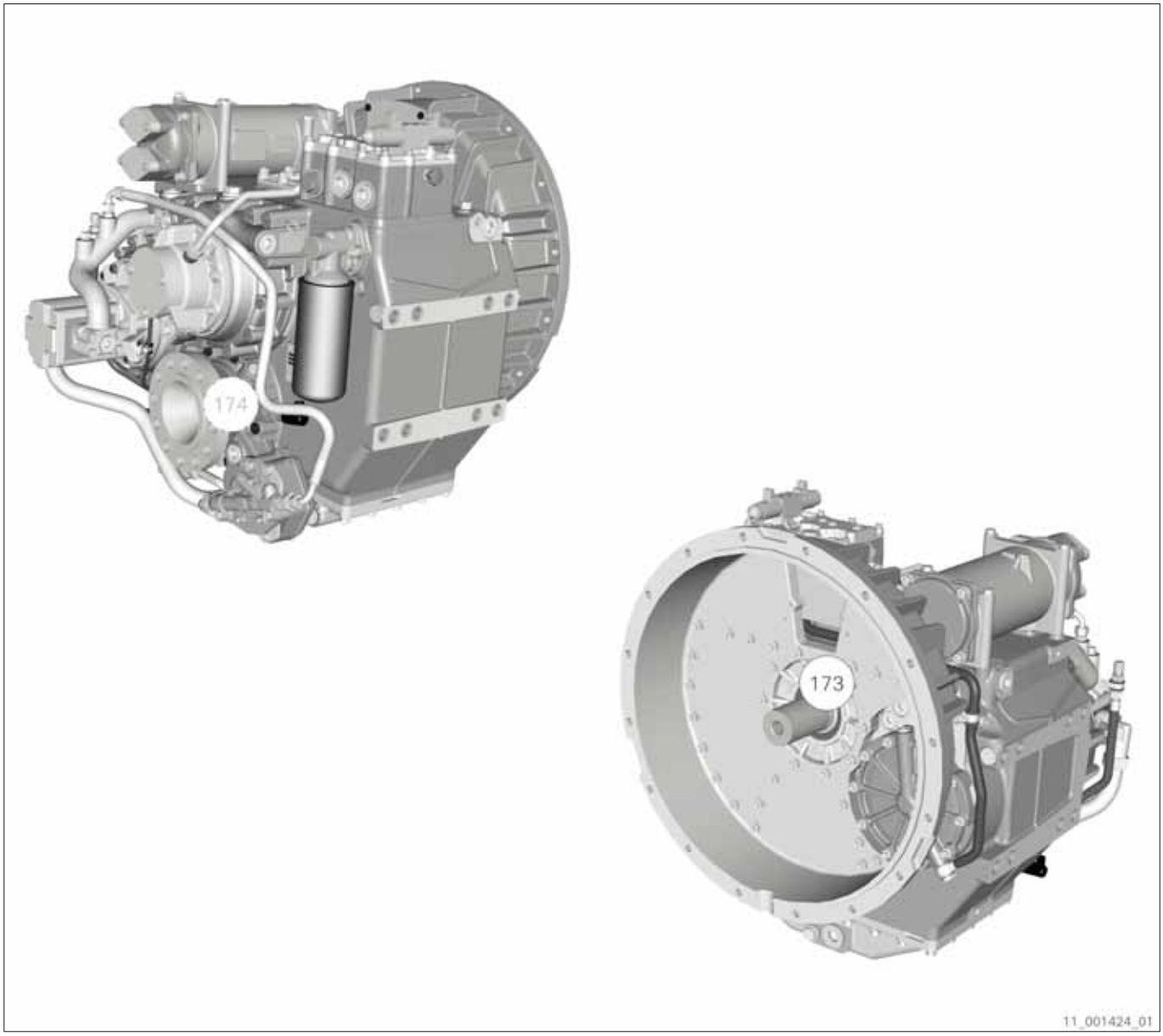

Fig. 360

9.25.1 Checking the shaft sealing ring of the input shaft

If possible, carry out this maintenance work together with maintenance work 174.

1. Check shaft sealing ring (1) for leaks. If required, collect escaping oil.

   If the shaft sealing ring (1) is visibly damaged, replace the shaft sealing ring as soon as possible.

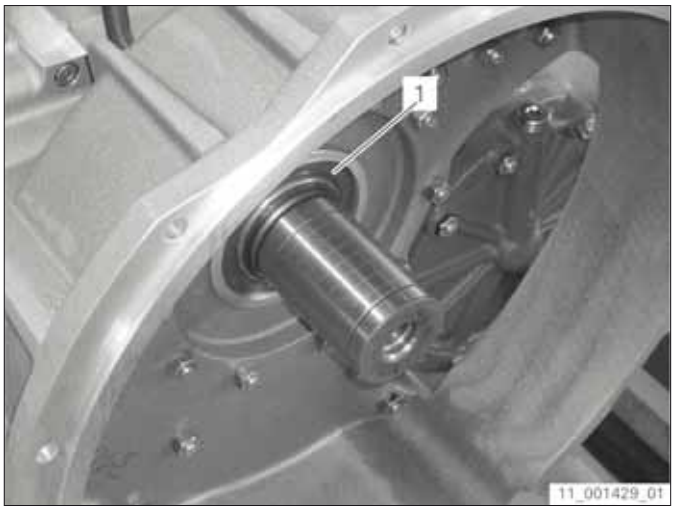

Fig. 361

9.26 Maintenance work 174: Check shaft sealing ring of the output shaft

	ZF 3000 family		
Maintenance work	Maintenance level	Carry out together with the maintenance work	Time in minutes
174	A4	173	15
Tools	---		
Parts	---		
Material	---		
Test equipment	---		
Location:	Date:		Page 1 of 2

Tab. 62 Maintenance work 174

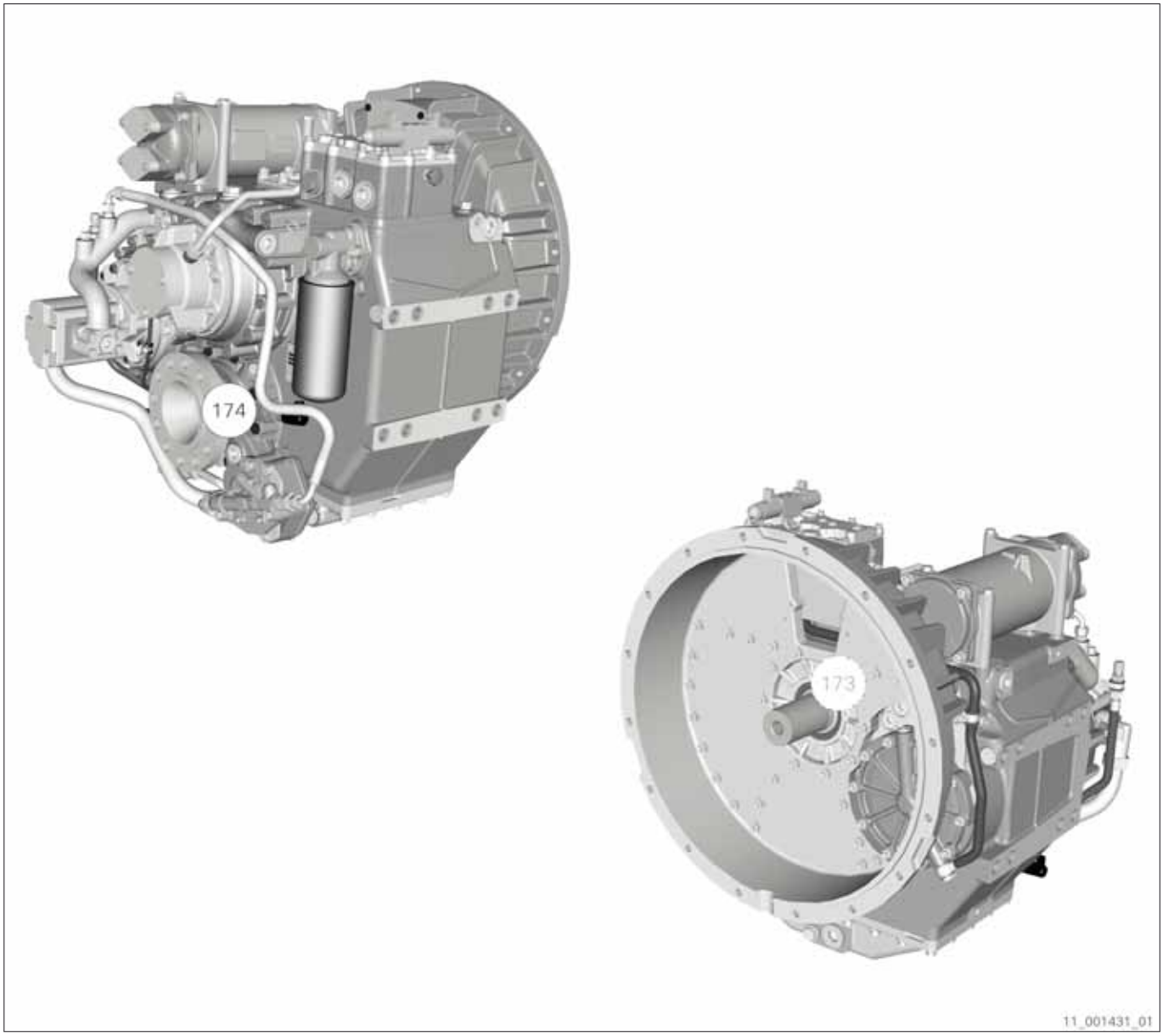

Fig. 362

9.26.1 Checking the shaft sealing ring of the output shaft

If possible, carry out this maintenance work together with maintenance work 173.

1. Check shaft sealing ring (1) for leaks. If required, collect escaping oil.

   If the shaft sealing ring (1) is visibly damaged, replace the shaft sealing ring as soon as possible.

Fig. 363

9.27 Maintenance work 181: Visually inspect and clean power take-in brake

	ZF 3000 family		
Maintenance work	Maintenance level	Carry out together with the maintenance work	Time in minutes
181	3.1, A4	---	30
Tools	Tool kit W1, lighting products		
Parts	Friction blocks		
Material	Cleaning agent, lint-free cloth		
Test equipment	---		
Location:	Date:		Page 1 of 11

Tab. 63 Maintenance work 181

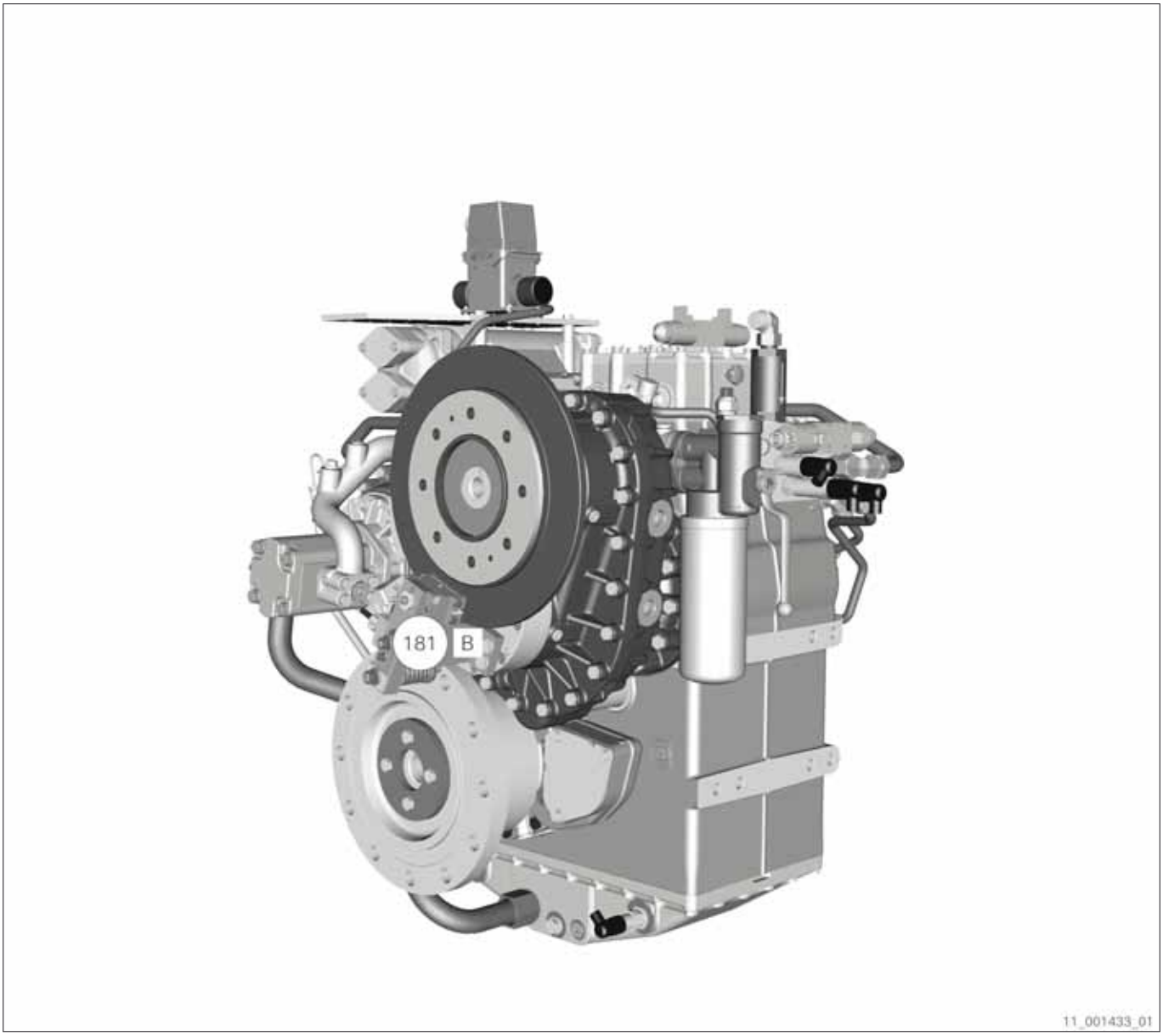

Fig. 364

B Electrically operated brake

9.27.1 Electrically operated brake

9.27.1.1 Visually inspecting the brake

Requirements:
- The main drive's engine starting mechanism is jammed.
- The power take-in's engine starting mechanism is jammed.
- The power take-in clutch is open.
- Output shaft is stationary.
- Only perform visual inspection and clean when engine is not running.

⚠ DANGER

Danger to life due to energized components.
Death or sever injury probable.
⇨ Deenergize machine.
⇨ Protect the machine against unauthorized or accidental activation.

1. Have brake disconnected from voltage supply by staff specially trained and authorized for handling high-voltage systems.

2. Have brake checked for zero potential by staff specially trained and authorized for handling high-voltage systems.

3. Have plug (2) removed from electronics box (1) by staff specially trained and authorized for handling high-voltage systems.

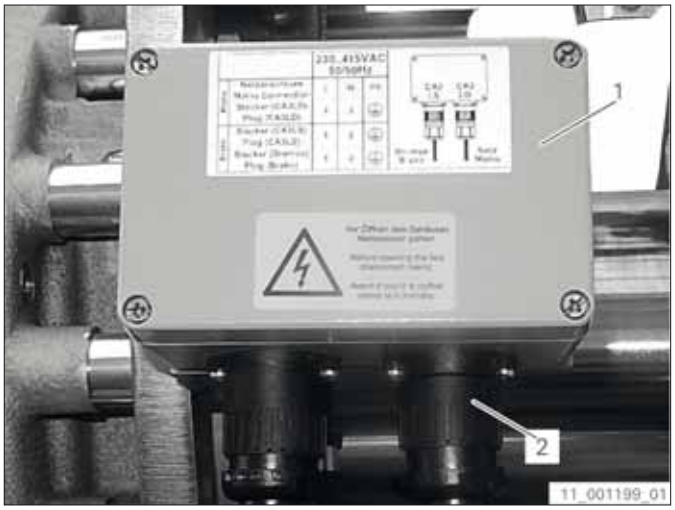

Fig. 365

4. Obtain maintenance release from staff specially trained and authorized for handling high-voltage systems.

5. Check the screw connection of the following parts:
   - Brake at transmission
   - Side plates to attach friction blocks

6. Check thickness of brake lining of friction blocks *(refer to section Checking the thickness of brake lining and the distance between brake lining and brake disk, page 413)*.

7. Visually inspect electric lines for damage.

8. Inform staff specially trained and authorized for handling high-voltage systems about the completion of the maintenance work.

9. Have plug (2) connected to electronics box (1) by staff specially trained and authorized for handling high-voltage systems.

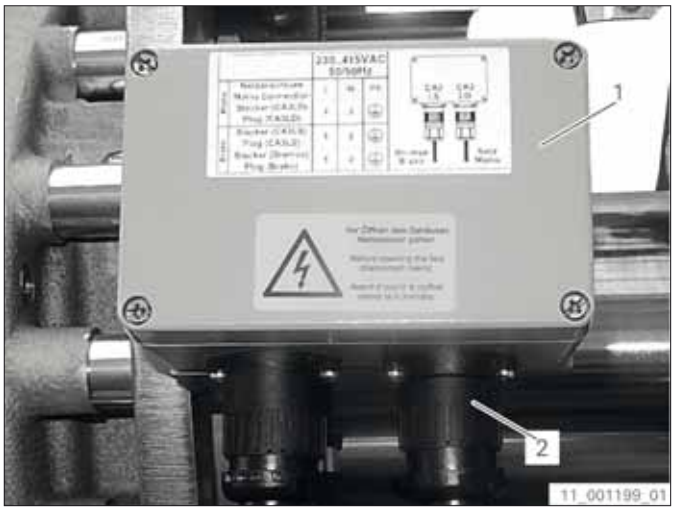

Fig. 366

10. Have brake connected to voltage supply by staff specially trained and authorized for handling high-voltage systems.

9.27.1.2 Checking the thickness of brake lining and the distance between brake lining and brake disk

Requirements:

- The main drive's engine starting mechanism is jammed.
- The power take-in's engine starting mechanism is jammed.
- The power take-in clutch is open.
- Output shaft is stationary.
- Only perform visual inspection and clean when engine is not running.

⚠ DANGER

Danger to life due to energized components.
Death or sever injury probable.

⇨ Deenergize machine.

⇨ Protect the machine against unauthorized or accidental activation.

1. Have brake disconnected from voltage supply by staff specially trained and authorized for handling high-voltage systems.

2. Have brake checked for zero potential by staff specially trained and authorized for handling high-voltage systems.

3. Have plug (2) removed from electronics box (1) by staff specially trained and authorized for handling high-voltage systems.

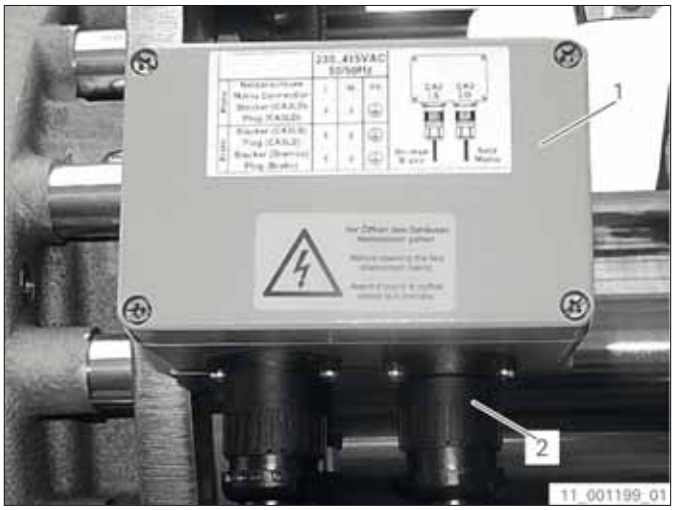

Fig. 367

4. Obtain maintenance release from staff specially trained and authorized for handling high-voltage systems.

5. The brake lining's wear limit (A) amounts to an overall thickness of 7.0 mm. The overall thickness comprises the holder plate thickness (4) and the friction block's residual brake lining (3) *(refer to fig. 368, page 414)*.

Check thickness of brake lining of friction blocks (3). If required, replace friction blocks *(refer to section Replacing the friction blocks, page 416)*.

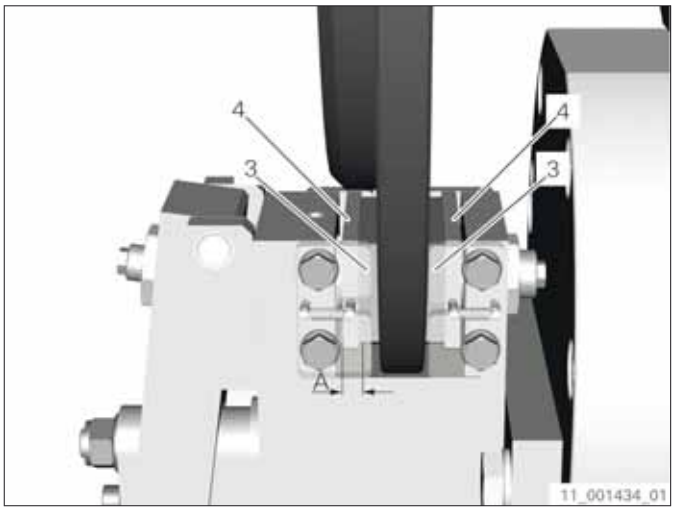

Fig. 368

6. The maximum distance (B) between the friction blocks (3) and the brake disk (5) is 0.6 mm on both sides.

Check the distance (B) between the friction blocks (3) and the brake disk (5).

7. If the distance (B) is greater than 0.6 mm, reset bolts (6, 7) so that the distance (B) between the friction blocks (3) and the brake disk (5) is 0.3 mm on both sides.

8. Measure distance (B) over the entire width of the friction block (3) using a feeler gage.

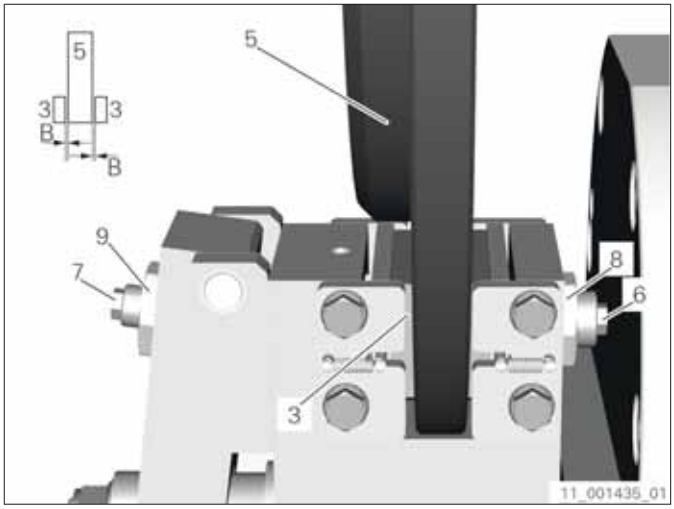

Fig. 369

9. Lock screws (6, 7) with nuts (8, 9).

10. Inform staff specially trained and authorized for handling high-voltage systems about the completion of the maintenance work.

11. Have plug (2) connected to electronics box (1) by staff specially trained and authorized for handling high-voltage systems.

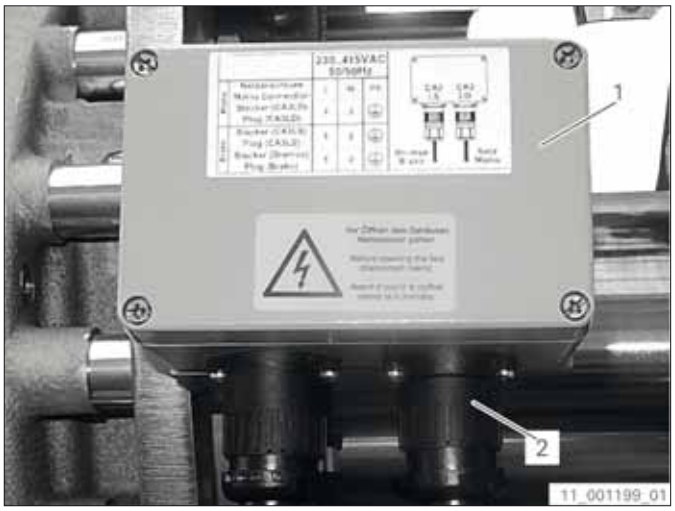

Fig. 370

12. Have brake connected to voltage supply by staff specially trained and authorized for handling high-voltage systems.

9.27.1.3 Replacing the friction blocks

Requirements:

- The main drive's engine starting mechanism is jammed.
- The power take-in's engine starting mechanism is jammed.
- The power take-in clutch is open.
- Output shaft is stationary.
- Only perform visual inspection and clean when engine is not running.

Operating supplies and auxiliary materials:

- 0666.690.248 Loctite 243 jointing compound

Only replace friction blocks in pairs.

DANGER

Danger to life due to energized components.
Death or sever injury probable.

⇨ Deenergize machine.

⇨ Protect the machine against unauthorized or accidental activation.

1. Have brake disconnected from voltage supply by staff specially trained and authorized for handling high-voltage systems.

2. Have brake checked for zero potential by staff specially trained and authorized for handling high-voltage systems.

3. Have plug (2) removed from electronics box (1) by staff specially trained and authorized for handling high-voltage systems.

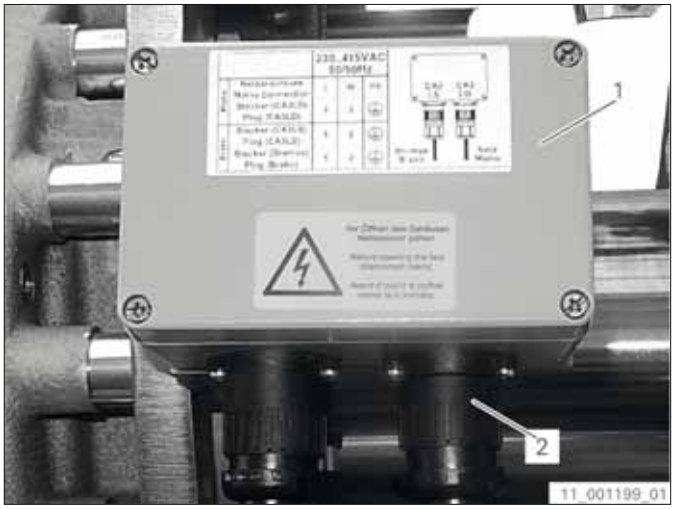

Fig. 371

4. Obtain maintenance release from staff specially trained and authorized for handling high-voltage systems.

5. Take out extension springs (3) from side plates (4) and friction blocks (5).

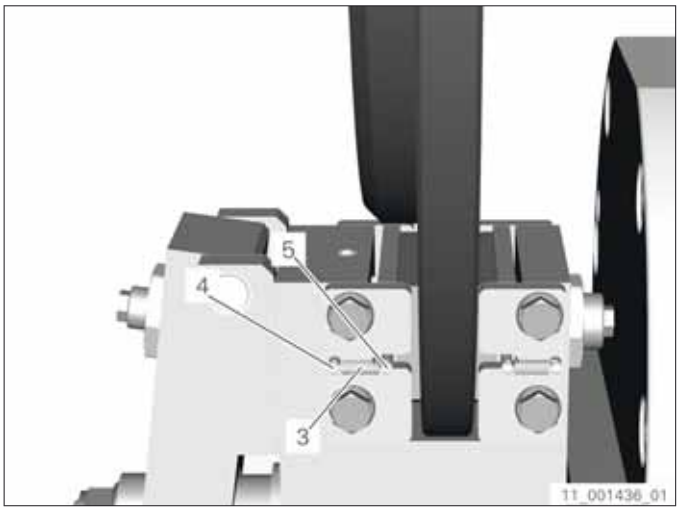

Fig. 372

6. Loosen screws (6) at one of the two side plates (4) on each side and take out side plates (4).

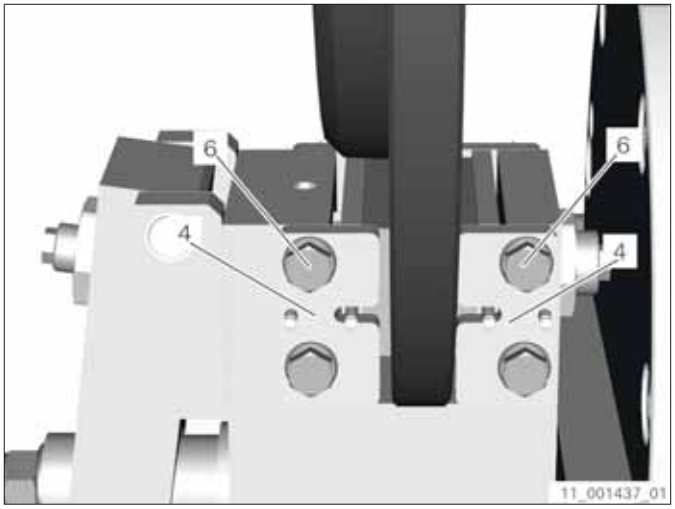

Fig. 373

7. Pull out and remove friction blocks (5) from the side.

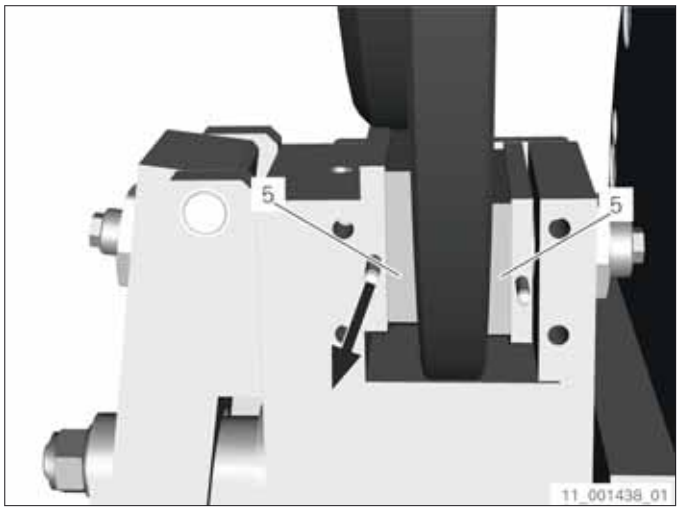

Fig. 374

8. Unscrew screws (7, 8).

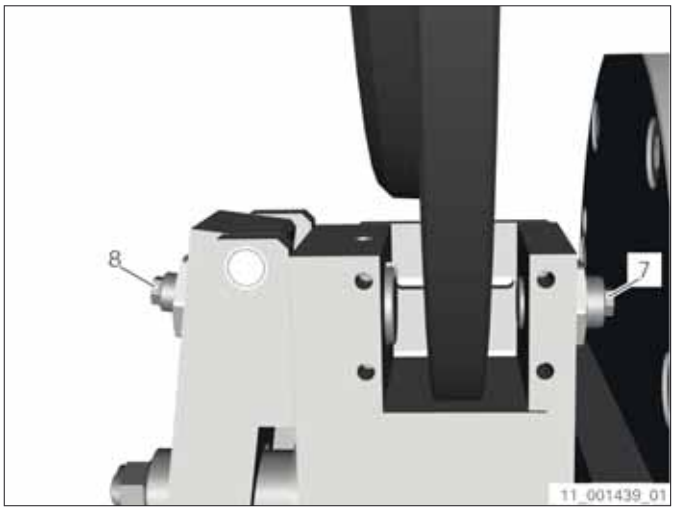

Fig. 375

9. Insert new friction blocks (5) from the side. Observe the following:
   - Friction block chamfer is at the outside diameter of the brake disk.
   - Friction block's brake lining faces towards the brake disk.

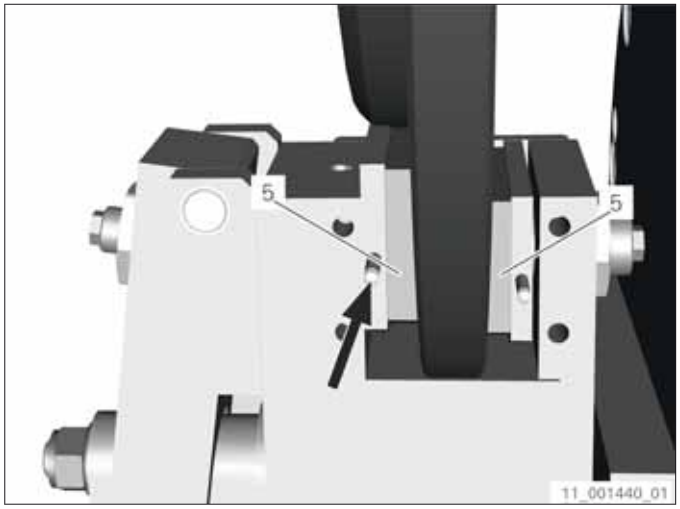

Fig. 376

10. Apply 0666.690.248 [Loctite 243 jointing compoun d] on the screws (6).

11. Fasten side plates (4) using screws (6).

12. Tighten screws (6).
    Tightening torque: 11 Nm

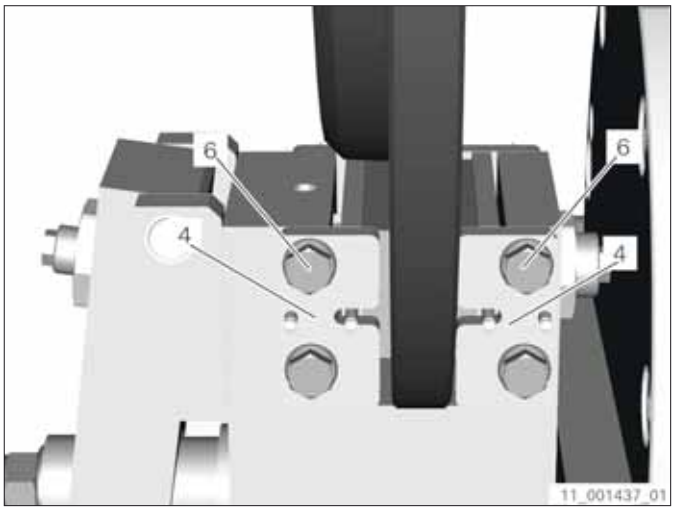

Fig. 377

13. Attach extension springs (3) to side plates (4) and friction blocks (5).

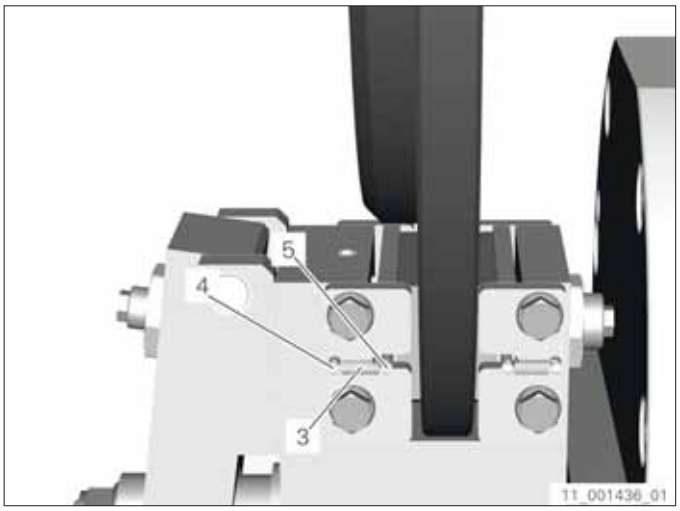

Fig. 378

14. Reset screws (7, 8) so that the distance (B) between the friction blocks (5) and the brake disk (9) is 0.3 mm on both sides.

15. Measure distance (B) over the entire width of the friction block (5) using a feeler gage.

16. Lock screws (7, 8) with nuts (10, 11).

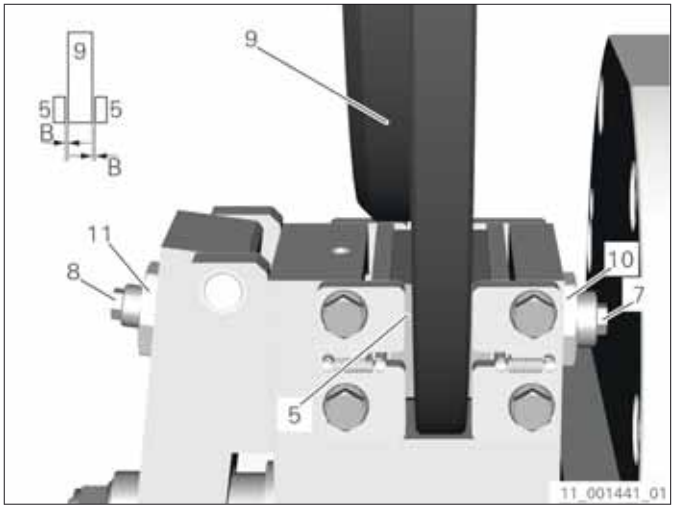

Fig. 379

17. Inform staff specially trained and authorized for handling high-voltage systems about the completion of the maintenance work.

18. Have plug (2) connected to electronics box (1) by staff specially trained and authorized for handling high-voltage systems.

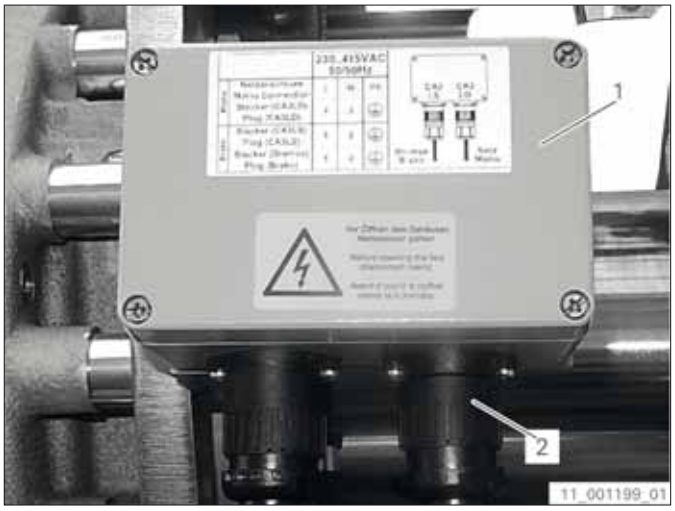

Fig. 380

19. Have brake connected to voltage supply by staff specially trained and authorized for handling high-voltage systems.

9.28 Maintenance work 182: Visually inspect and clean additional equipment

	ZF 3000 family		
Maintenance work	Maintenance level	Carry out together with the maintenance work	Time in minutes
182	A4	---	30
Tools	Tool kit W1, lighting products		
Parts	Sealing ring		
Material	Lint-free cloth		
Test equipment	---		
Location:	Date:		Page 1 of 4

Tab. 64 Maintenance work 182

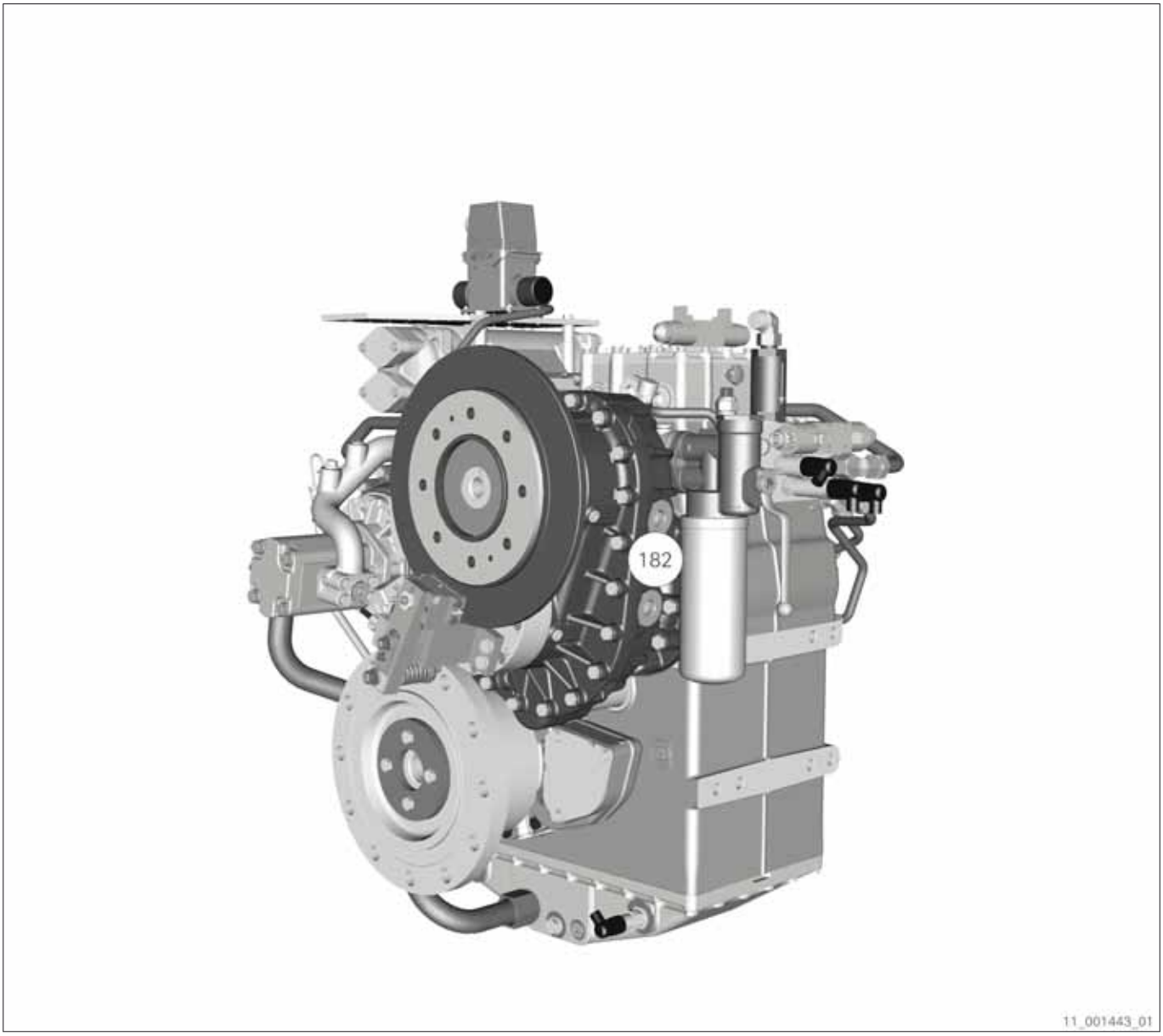

Fig. 381

9.28.1 Visually inspecting and cleaning the power take-in

The following maintenance works are examples for the additional equipment power take-in.

9.28.1.1 Checking the shaft sealing ring of the power take-in shaft

1. Check shaft sealing ring (1) for leaks. If required, collect escaping oil.

   If the shaft sealing ring (1) is visibly damaged, replace the shaft sealing ring as soon as possible.

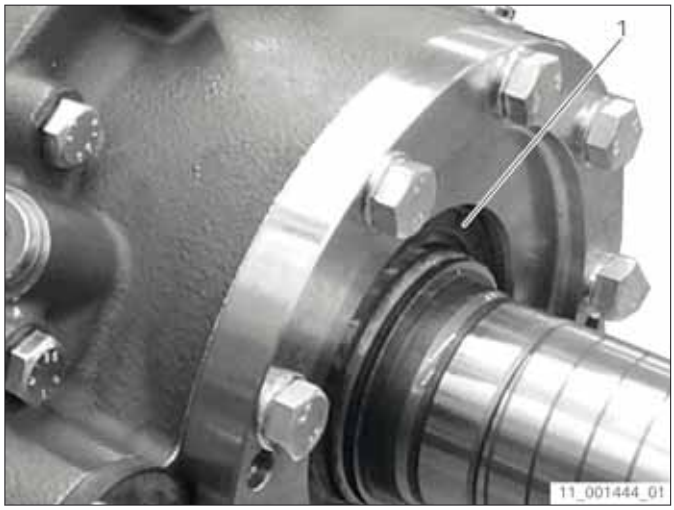

Fig. 382

9.28.1.2 Conducting visual inspection at running gearing

Requirements:

- The engine starting mechanism is jammed.

1. **NOTICE**

   Property damage caused by a falling part possible.

   ⇨ Secure the part against falling.

   Remove screw plugs (1, 2) and pay attention that no parts fall into the transmission housing.

Fig. 383

2. Check the gearings (3) on the input shaft and the output shaft of the power take-in.

3. Check the tooth flanks for wear.

   No pitting or other signs of wear may occur on the tooth flank.

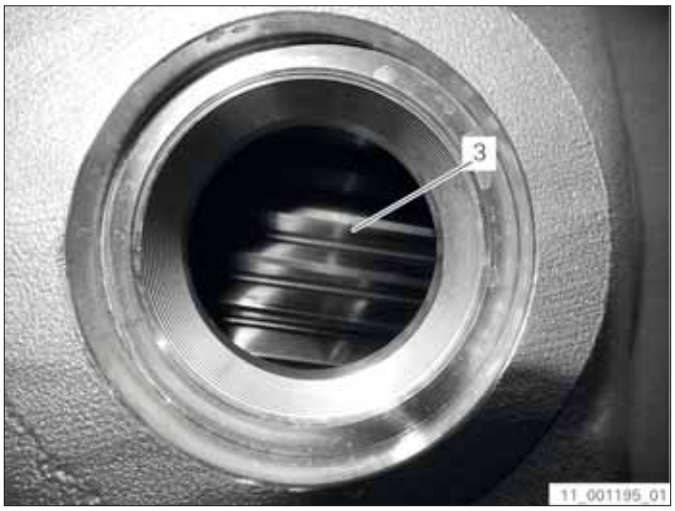

Fig. 384

4. Screw in screw plugs (1, 2) with new sealing ring and tighten.
   Tightening torque: 160 Nm

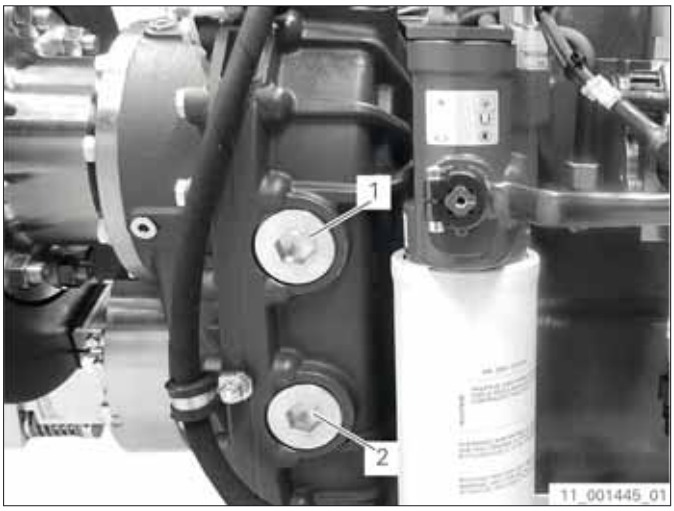

Fig. 385

10 Troubleshooting

10.1 Troubleshooting notes

The minimum monitoring is required for troubleshooting *(refer to section Minimum transmission monitoring, page 116)*.

The monitoring equipment such as sensors, warning equipment and display instruments are not part of the ZF Friedrichshafen AG standard scope of supply.

The error messages can only be displayed if the connection options from the transmission are used.

The following is described in the failure tables:

- Primarily occurring errors
- Possible causes
- Remedy

If a transmission fault cannot be remedied with the listed remedial actions, contact the nearest ZF service branch.

10.2 Failure table for the complete transmission

Error	Possible cause	Remedy
Oil temperature is too high. Measuring point (11), (12), (41), (53)	An insufficient water volume is flowing through the transmission oil cooler.	Increase water flow rate.
	Transmission oil cooler is silted up.	Clean transmission oil cooler.
	Disk damage	Check multidisk clutch.
Oil temperature is too low. Measuring point (11), (12), (41), (53)	An excessive water volume is flowing through the transmission oil cooler.	Reduce water flow rate.
Filter differential pressure is too high. Measuring point (127)	Filter element is contaminated.	• During operation: *(refer to section Operating the filter during operation, page 288)* • Out of operation: *(refer to section Replacing the change-over filter's filter cartridge, page 327)*
	Warning interruption unit for oil temperatures <35°C is not installed.	Install warning interruption unit.
There is no clutch oil pressure. Measuring point (2), (21), (27), (266), (267)	The transmission has not been filled with any oil.	Fill with oil.
	Direction of drive rotation is incorrect.	Use special transmission design.
	Display device is defective.	Correct error.
	Oil pump is defective.	Replace oil pump.
Clutch oil pressure is too low. Measuring point (2), (21), (27), (266), (267) If the error cannot be rectified, the lubricating oil supply of the transmission is also at risk. Further travel with a reduced input speed is only permitted to the next repair opportunity.	Oil grade with an insufficient viscosity is being used.	Use stipulated oil grades, see the ZF List of Lubricants TE-ML 04.
	Oil pump is defective.	Replace oil pump.
	Safety valve is leaking.	Correct error.
	Pressure modulation is not working properly.	• If the error is not rectified on board, travel with a reduced input speed at which the clutch does not slip is permitted to the next repair opportunity. • Avoid reversing or only perform it when the ship screw propeller is almost stationary and at the lowest possible engine idle speed.
Clutch oil pressure is too high. Measuring point (2), (21), (27), (266), (267)	Oil grade with an excessive viscosity is being used.	Use stipulated oil grades, see the ZF List of Lubricants TE-ML 04.

Tab. 65 Failure table for the complete transmission

Error	Possible cause	Remedy
Transmission of power from the transmission input to the transmission output has been interrupted.	There is an error in the electric system. Test option: The transmission of power is normal when actuating the transmission with the mechanical emergency actuation.	Rectify error in the electric system.
	There is no clutch oil pressure.	Possible causes and remedial actions, see error: • There is no clutch oil pressure. • Clutch oil pressure is too low.
Transmission of power from the transmission input to the transmission output cannot be interrupted. Clutch does not open.	There is an error in the electric system. Test option: The transmission of power is normal when actuating the transmission with the mechanical emergency actuation.	Rectify error in the electric system.
	Multidisk package is defective.	Contact the nearest ZF service branch.
Clutch slips at a high engine speed.	Clutch oil pressure is too low. Measuring point (38), (39)	Possible causes and remedial actions, see error: • Clutch oil pressure is too low. If the error is not rectified on board, travel with a reduced input speed at which the clutch does not slip is permitted to the next repair opportunity. Avoid reversing or only perform it when the ship screw propeller is almost stationary and at the lowest possible engine idle speed.
Measured on the oil dipstick measuring points, the oil level drops drastically *(refer to section Checking the oil level, page 308)*.	Points on the housing separating faces, oil tubes or shaft sealing rings are leaking.	Correct error.
	Oil from the transmission oil cooler is gaining access to the cooling water system.	Rectify the error and, if necessary, replace the transmission oil cooler.
Measured on the oil dipstick measuring points, the oil level increases *(refer to section Checking the oil level, page 308)*.	Water from the cooling water system is gaining access to the oil circuit.	Rectify error and change oil *(refer to section Changing oil, page 323)*. Check water content in oil after oil change.
The transmission is too loud in certain speed ranges.	Torsional vibration resonances from the drive system occur in the engine speed range.	Avoid critical speed range. Use a suitable torsionally flexible coupling.
The transmission is too loud in the engine idle speed range.	Torsional vibration resonances from the drive system occur in the engine idle speed range.	Increase engine idle speed.

Tab. 66 Failure table for the complete transmission (continued)

Error	Possible cause	Remedy
Engine stalls when quickly switching over from the forward shift position into the reverse shift position.	Engine idle speed is too low.	Increase engine idle speed.
	Switchover maneuver is performed too quickly or at an excessively high ship speed.	Switchover maneuver *(refer to section Crash stop maneuver, page 270)*.
Electrically operated brake does not close.	There is an error in the electric system.	Have error in electric system rectified by staff specially trained and authorized for handling high-voltage systems.

Tab. 67 Failure table for the complete transmission (continued)

10.3 Failure table for the transmission oil cooler

Error	Identifying feature	Possible cause	Remedy
Oil is escaping into the cooling water system.	Oil level is too low.	Tubes in the transmission oil cooler are leaking.	• Empty the transmission oil cooler and demount it. • Demount the water supply cover and the cover. • Secure the tube bundle with four locating plates and four screws. • Apply 5 bar of compressed air to the cladding. • Locate the defective tube on the tube plates. • Seal the defective tube with a copper plug.
Water is escaping into the oil circuit.	Oil level is too high, milky appearance.		
Oil is escaping from the transmission oil cooler.	Visible oil leak on the cover or water supply cover.	O-ring between the tube plate and the housing is defective.	• Empty the transmission oil cooler on the water end and the oil end and demount it. • Demount water supply cover and cover. • Pull the tube bundle. • Replace O-rings.
	Visible oil leak on the transmission.	O-ring on the transmission flange is defective.	• Empty the transmission oil cooler on the water end and the oil end and demount it. • Replace O-rings.
	Visible oil leak on the transmission oil cooler housing.	The transmission oil cooler housing is defective.	Replace the transmission oil cooler.
Water is escaping from the transmission oil cooler.	Visible water leak at the cover or water supply cover.	O-ring between tube plate and cover or water supply cover is defective.	• Empty the transmission oil cooler on the water end and the oil end and demount it. • Demount water supply cover and cover. • Secure the tube bundle with four locating plates and four screws. • Replace O-rings.
	Visible water leak on the tube socket.	Tube connection seal is defective.	Replace seal on the tube socket.

Tab. 68 Failure table for the transmission oil cooler

Error	Identifying feature	Possible cause	Remedy
Oil temperature is too high.	Cooling power of transmission oil cooler is too low.	Cooling water flow rate is too low.	Increase flow rate. Observe the information in the transmission installation drawing.
			• In the event of excessively contaminated water end, e.g. caused by thick deposits: – Clean the tubes of the tube bundle.
		Heat transfer from oil to water is not sufficient.	• In the event of an excessively contaminated oil end, e.g. caused by thick deposits: – Clean the multidisk package. • In the event of an incorrectly installed separating strip: – Correctly install the separating strip. • In the event of an incorrectly installed tube bundle: – Correctly install the tube bundle and, in doing so, note the X marking. • In the event of non-vented pressure chambers: – Bleed pressure chambers.

Tab. 69 Failure table for the transmission oil cooler (continued)

10.4 Troubleshooting on the transmission oil cooler

10.4.1 Leaking tubes

In the event of leaking tubes , disassemble the transmission oil cooler *(refer to section Disassembling the transmission oil cooler without removal of the tube bundle, page 383)*.

After the tube plates have been cleaned, it can be determined which tube is leaking by the escaping medium, e.g. compressed air. Seal leaking tube from both sides.

10.4.1.1 Sealing leaking tubes

Sealing plugs with the ZF part number 0501.326.932 are available at ZF Friedrichshafen AG. As a result, further operation without the need to replace the entire transmission oil cooler is possible.

1. Disassemble transmission oil cooler *(refer to section Disassembling the transmission oil cooler without removal of the tube bundle, page 383)*.

2. Thoroughly clean the defective tube to the offset of the sealing plug.

   Inside the tube, this area must be free from corrosion and pitting corrosion.

3. Using suitable equipment, insert the sealing plugs so that they are flush.

   Do not insert sealing plugs too firmly as adjacent roller points may otherwise become damaged. Max. 10% of the tubes can become sealed without a noticeable drop in power. It is not possible to remove the defective tube. This type of repair is not permissible if more than 10% of the tubes are defective as the cooling power will become too low.

4. Reassemble the transmission oil cooler *(refer to section Reassembling the transmission oil cooler without removal of the tube bundle, page 392)*.

10.4.2 Leaking O-rings

The O-rings can be obtained from the Customer Service department of ZF Friedrichshafen AG.

An O-ring belonging to the tube plate is defective if a leakage is present between the water supply cover or the cover and the housing. The type of escaping medium makes it possible to identify which tube plate groove is defective.

Defect on the water end
Disassemble the transmission oil cooler in the event of a defect on the water end *(refer to section Disassembling the transmission oil cooler without removal of the tube bundle, page 383)*.

Replace defective O-ring *(refer to section Reassembling the transmission oil cooler without removal of the tube bundle, page 392)*.

Defect on the oil end
Disassemble the transmission oil cooler in the event of a defect on the oil end *(refer to section Disassembling the transmission oil cooler with removal of the tube bundle, page 387)*.

Replace defective O-ring *(refer to section Reassembling the transmission oil cooler after removal of the tube bundle, page 396)*.

10.5 Diagnosis with ZF Autotroll®

ZF Autotroll® is part of the ZF extra equipment.

In addition to control functions, the control unit of the ZF-Autotroll® is also equipped with a diagnosis system.

The diagnosis system has the following tasks:

- System monitoring, monitoring of operating variables, error detection, generation of emergency control properties
- Registration of occurred errors in the error memory and communication with the ZF-TESTMAN diagnostic unit

The diagnosis is active as soon as operating voltage is applied at the ZF Autotroll® control unit. This means that system errors are also diagnosed in non-trolling mode.

In order to support system services, a ZF-TESTMAN diagnostic unit can be connected to the ZF Autotroll® control unit. This work require the deployment of trained specialized staff from the Friedrichshafen Service Center. The ZF-TESTMAN diagnostic unit is also available here. This diagnostic unit is not part of the ZF Autotroll® scope of supply.

11 Annex

11.1 List of abbreviations

NR	Non-Reversing
PTI	Power Take-In
PTO	Power Take-Off
SAE	Society of Automotive Engineers
WAF	width across flats

11.2 Subject index

A
Aligning the propshaft
x (GAP), 145, 189
y (SAG), 145, 189
Alignment screws, 130, 138, 147

C
Center distance
horizontal, 189
vertical, 189
Commissioning, 194
Connection to the engine
flange-mounted installation, 141
freestanding installation, 140, 142
installation via cardan shaft, 142
Control unit
main drive, 86
power take-in, 87
shaft brake, 87
Corrosion protection
decommissioning, 296
Crash stop maneuver, 270

D
Decommissioning
Transmission oil cooler, 296
Direction of drive rotation
non-standard direction of drive rotation, 185, 186
Normal, 16
special design, 16
standard direction of drive rotation, 185, 186
Direction of rotation of propeller when traveling forward, 186
engine arrangement of V version and U version, 186, 188
standard engine arrangement, 186, 187

E
Emergency situation
crash stop maneuver, 270
emergency control, 284, 306

F
Four-shaft arrangement, 18
Frequency selector switch, 133

G
Grounding
Cooling water line, 128
flange-mounted transmission, 125
Freestanding transmission, 124

H
High pressure filter, 84
Hydraulic shaft brake, 19

I
Initial operation, 190
filling oil, 191
Installation, 129
electric motor of pump unit, 131
electrically operated brake, 133
Monitoring unit, 132
oil pump of pump unit, 131
transmission, 130
Transmission oil cooler, 132

L
List of Lubricants, 190, 304
Load on the transmission input
in axial direction, 185
in radial direction, 185
Load on the transmission output
in radial direction, 189

M
Maintenance
101 check oil level, 307
103 visual inspection – transmission, 309
121 clean transmission exterior, 311
122 retighten screw connections, 313
123 check mechanical actuation shift settings, 315
124 grease moving external parts of the mechanical actuation, 320
141 change oil, 322
142 replace filter cartridge and clean power take-in filter, 326
161 visual inspection – torsionally flexible coupling, 337
162 visual inspection - flexible transmission mounting and flexible engine mounting, 339
163 visual inspection – clutch disks, 341
164 visual inspection – running gearing, 344
165 check oil pumps, 347
166 check control unit and valve block of power take-in and shaft brake, 362
167 check electric actuation unit, 371
168 recalibrate display device, 379

169 visually inspect transmission oil cooler, 381
172 check injector tube valve, 403
173 Shaft sealing ring - input shaft, 406
174 Shaft sealing ring - output shaft, 408
181 visually inspect and clean power take-in brake, 410
182 visually inspect and clean additional equipment, 421
Mechanical emergency actuation
counter-rotation shift position, 199, 207, 228, 236, 253, 261
enginewise rotation shift position, 200, 212, 229, 242, 254, 266
neutral shift position, 199, 207, 212, 228, 236, 242, 253, 261, 266
Monitoring unit
Installation, 132
Monitoring values
ZF 3000 family, 171
ZF 3300 family and ZF W3300 family with power take-in, 179
ZF 3300 family and ZF W3300 family with shaft brake, 181
ZF 3300 family and ZF W33000 family, 174
ZF 3300 NC (counter-rotation) family, 173
ZF 3300 NC (counter-rotation) family with gray iron cast housing, 177, 178
ZF 3300 NC (enginewise rotation) family aluminum housing, 176
ZF 3700 family, 183

O
Oil filter, 83–85
change-over filter
operation, 288
Operating range
application group C, 299
application group L, 299
application group M, 299
application group P, 299
Operating supplies
For maintenance, 304
Output rotation direction, 53

P
Power take-in, 18, 81
Power take-off, 80
input shaft front PTO, 81
pump PTO, 81
top PTO, 81
Preservation
decommissioning, 296
storage at customer, 294

R
Reduction gear without multidisk clutch
three-shaft arrangement, 20
two-shaft arrangement, 20
Reduction gears without multidisk clutch
three-shaft arrangement, 20

S
Safety
during assembly work, 13
during commissioning, 13
during maintenance work, 13
during repair work, 13
General safety instructions, 13
Handling aids, 14
Handling of ZF product, 14
Handling operating supplies, 14
Intended use, 13
Noise, 14
product-specific safety instructions, 15
Signal words, 12
Symbols, 12
Safety instructions
product-specific safety instructions
high-pressure cleaner, 15
Shaft brake
hydraulic, 82
Shift sequence, 269
Spare parts, 303

T
Technical Data
ZF 3000 A, ZF 3050 A, ZF 3055 A, ZF 3060 A, ZF 3070 A, ZF 3150 A, ZF 3160 A, ZF 3170 A, ZF 3000 NRA, ZF 3050 NRA, ZF 3055 NRA, ZF 3060 NRA, ZF 3070 NRA, ZF 3150 NRA, ZF 3160 NRA, ZF 3170 NRA, 154
ZF 3000 NC (Counter-rotation), ZF 3050 NC (Counter-rotation), ZF 3055 NC (Counter-rotation), ZF 3060 NC (Counter-rotation), 153
ZF 3000 V, ZF 3050 V, ZF 3055 V, ZF 3060 V, ZF 3070 V, ZF 3000 NRV, ZF 3050 NRV, ZF 3055 NRV, ZF 3060 NRV, ZF 3070 NRV, 156
ZF 3000, ZF 3050, ZF 3055, ZF 3060, ZF 3070, ZF 3000 NR, ZF 3050 NR, ZF 3055 NR, ZF 3060 NR, ZF 3070 NR, 151
ZF 3050 D, ZF 3055 D and ZF 3060 D, 158
ZF 3310 NC (Enginewise rotation), ZF 3350 NC (Enginewise rotation), ZF 3355 NC (Enginewise rotation), ZF 3360 NC (Enginewise rotation), 161

ZF 3310, ZF 3350, ZF 3355, ZF 3360,
ZF 3370, ZF 3310 NR, ZF 3350 NR,
ZF 3355 NR, ZF 3360 NR, ZF 3370 NR, 159
ZF 3311 NC (Counter-rotation),
ZF 3351 NC (Counter-rotation),
ZF 3356 NC (Counter-rotation),
ZF 3361 NC (Counter-rotation),
ZF W3310 NC (Counter-rotation),
ZF W3350 NC (Counter-rotation),
ZF W3355 NC (Counter-rotation), 164
ZF 3311, ZF 3351, ZF 3356, ZF 3361,
ZF W3310, ZF W3350, ZF W3355,
ZF 3311 NR, ZF 3351 NR, ZF 3356 NR,
ZF 3361 NR, ZF W3310 NR, ZF W3350 NR,
ZF W3355 NR, 162
ZF 3311, ZF 3351, ZF 3356, ZF 3361,
ZF W3310, ZF W3350, ZF W3355,
ZF 3311 NR, ZF 3351 NR, ZF 3356 NR,
ZF 3361 NR, ZF W3310 NR, ZF W3350 NR,
ZF W3355 NR with brake shaft, 167
ZF 3311, ZF 3351, ZF 3356, ZF 3361,
ZF W3310, ZF W3350, ZF W3355,
ZF 3311 NR, ZF 3351 NR, ZF 3356 NR,
ZF 3361 NR, ZF W3310 NR, ZF W3350 NR,
ZF W3355 NR with power take-in, 165
ZF 3711, ZF 3751, ZF 3756, ZF 3761,
ZF W3710, ZF W3750, ZF W3755,
ZF 3711 NR, ZF 3751 NR, ZF 3756 NR,
ZF 3761 NR, ZF W3710 NR, ZF W3750 NR,
ZF W3755 NR, 169
Three-shaft arrangement, 16
Tool kit, 306
Torsionally flexible coupling, 140, 141
Trailing operation, 283
occasional trailing operation, 283
regular trailing operation, 283
Transmission actuation
electric, 195, 223
main drive, 87
power take-in, 87
shaft brake, 87, 249
mechanical, 87
Transmission cooling, 85
Cooling water circuit, 122
Transmission oil cooler, 123
tubing, 126
Transmission cooling system, 121
Transmission diagram and power flow diagram
A version, 60
D version, 66
parallel version, 54
power take-in
main drive and power take-in (boost mode), 73
operation with main drive, 67
operation with power take-in, 70
V version, 63
Transmission diagram and the power flow diagram, 53
Transmission monitoring
clutch oil pressure, 117, 118
clutch oil pressure during operation with power take-in, 120
Counter-rotation pressure switch, 118
Differential pressure switch, 117
Enginewise rotation pressure switch, 119
Level monitoring, 119
lubricating oil pressure, 119
lubricating oil pressure during operation with power take-in, 120
lubricating oil temperature, 119
Neutral switch, 119
oil sump temperature, 117, 119
oil temperature during operation with power take-in, 120
shift position indicator of power take-in brake, 121
shift position indicator of power take-in clutch, 121
shift position indicator of shaft brake, 121
system oil pressure of shaft brake, 121
thrust bearing temperature, 119
Transmission views, 21, 23, 25, 27, 29, 31, 33, 35, 37, 39, 41, 43, 45, 47, 49, 51, 91, 95, 97, 100, 102, 105, 107, 110, 113
Transport, 293
Trolling mode, 88
Electric actuation, 90
Electric trolling, 89
Function description, 88
ZF Autotroll®, 90
Troubleshooting, 425
complete transmission, 426
transmission oil cooler, 428, 429
Type plate, 184

W

Warranty, 10

Z

ZF Autotroll®, 430
ZF service branch, 303

11.3 Overview of revisions

Date of issue	Initiator	Chapter	Remarks
2017-05	–	–	Complete revision of the operating instructions not drawn up in the content management system.
2018-06	IBAD2	Preface	The following variants were added to Section Validity and field of application: • Shaft brake • NC transmission
2018-06	IBAD2	Description	The following subsections were added to Section General design principle: • Transmission with hydraulic shaft brake • Reduction gear without multidisk clutch
2018-06	IBAD2	Description	The following subsections were added to Section Transmission views: • ZF 3000 NC (counter-rotation) family • ZF 3300 NC (enginewise rotation) family aluminum housing • ZF 3300 NC (counter-rotation) family • ZF 3300 family gray cast iron housing with shaft brake • ZF W3300 NC (counter-rotation) family • ZF W3300 family with shaft brake
2018-06	IBAD2	Description	The following subsections were added to Section Transmission diagram and power flow diagram: • NC transmission, counter-rotation with pump • NC transmission, counter-rotation without pump • NC transmissions, enginewise rotation • Shaft brake – Reverse transmission – NR transmission, counter-rotation – NR transmission, enginewise rotation
2018-06	IBAD2	Description	Section Hydraulic shaft brake added.
2018-06	IBAD2	Description	The subsections Shaft brake and Oil pump of pump unit were added to Section Oil supply.
2018-06	IBAD2	Description	The subsection NC transmission with attached pump was added to Section Oil supply.
2018-06	IBAD2	Description	The subsection NC transmission with external pump was added to Section Oil supply.
2018-06	IBAD2	Description	The subsection NC transmission was added to Section Cooling.
2018-06	IBAD2	Description	The subsections Shaft brake and Hydraulic multidisk clutch were added to Section Clutch.
2018-06	IBAD2	Description	The subsection Shaft brake was added to Section Control unit.
2018-06	IBAD2	Description	The following subsections were added to Section Transmission monitoring: • ZF 3000 NC (counter-rotation) family • ZF 3300 NC (enginewise rotation) family aluminum housing • ZF 3300 NC (counter-rotation) family and ZF W3300 NC (counter-rotation) family with gray cast iron housing • ZF 3300 family and ZF W3300 family with shaft brake
2018-06	IBAD2	Description	The subsections Shift position indicator of shaft brake (172) and System oil pressure of shaft brake (Messstelle 272) were added to Section Additional transmission monitoring.
2018-06	IBAD2	Description	The subsection Lubricating oil pressure (Messstelle 22) was added to Section Additional transmission monitoring.
2018-06	IBAD2	Description	Section Transmission cooling/Tubing/Straight stud/Length of thread engagement: Table Maximum length of thread engagement corrected and shaft brake variant added.

Date of issue	Initiator	Chapter	Remarks
2018-06	IBAD2	Technical Data	The following sections were added: • Technical Data ZF 3000 NC (counter-rotation) family • Technical Data ZF 3300 NC (enginewise rotation) family aluminum housing • Technical Data ZF 3300 NC (counter-rotation) family gray cast iron housing, ZF W3300 NC (counter-rotation) family • Technical Data ZF 3300 family aluminum housing with shaft brake • Technical Data ZF 3300 family gray cast iron housing, ZF W3300 family with shaft brake • Monitoring values for the ZF W3000 NC (counter-rotation) family • Monitoring values for the ZF 3300 NC (enginewise rotation) family aluminum housing • Monitoring values for the ZF 3300 NC (counter-rotation) family gray cast iron housing • Monitoring values for the ZF W3300 NC (counter-rotation) family • Monitoring values for the ZF 3300 family and ZF W3300 family with shaft brake
2018-06	TTQS	Placing into operation	The following subsections were added to Chapter Initial Operation: • Initial operation of the ZF product • Resuming operation of the ZF product after a prolonged downtime • Resuming operation of the ZF product after repair
2018-06	IBAD2	Placing into operation	The following variants were added to Section Work prior to initial operation/ Instructions Filling oil: • ZF 3000 NC family with counter-rotation direction • ZF 3300 NC family with enginewise rotation direction • ZF 3300 NC family and ZF W3300 NC family with counter-rotation direction
2018-06	IBAD2	Operation	The following sections were added: • Section Operating elements of the shaft brake • Electric actuation unit of the main drive of ZF 3300 family without NR • Electric actuation unit of the main drive of ZF 3300 NR (counter-rotation) family • Electric actuation unit of the main drive ZF 3300 NR (enginewise rotation) family • Electric actuation unit of the shaft brake
2018-06	IBAD2	Operation	The following subsections were added to Section Shift process: • Shift process when shaft brake is activated • Activating the shaft brake during standstill • Activating the shaft brake while driving • Crash stop maneuver • Shift process when shaft brake is deactivated • Deactivating the shaft brake during standstill • Deactivating the shaft brake while driving in operating mode "Driving with main drive"
2018-06	IBAD2	Maintenance	Section Maintenance work schedule: Entry "Check control unit and valve block of power take-in" changed to "Check control unit and valve block of power take-in and shaft brake."

Date of issue	Initiator	Chapter	Remarks
2018-06	IBAD2	Maintenance	The following variants were added to Section Maintenance work 141: Changing oil/Instructions Changing oil • ZF 3000 NC family with counter-rotation direction • ZF 3300 NC family with enginewise rotation direction • ZF 3300 NC family and ZF W3300 NC family with counter-rotation direction
2018-06	IBAD2	Maintenance	The shaft brake variant was added to Section Maintenance work 166: Check control unit and valve block of power take-in and shaft brake.
2018-06	IBAD2	Maintenance	The shaft brake variant was added to Section Maintenance work 167: Check electrical and mechanical actuation unit.

Tab. 70 Overview of revisions

ZF Friedrichshafen AG
Marine Propulsion Systems
88038 Friedrichshafen
Deutschland · Germany
Telefon/Phone +49 7541 77-2207
www.zf.com/contact

EN 3101.758.101k - 2018-06